All materials,plating and process meet HF requirements.

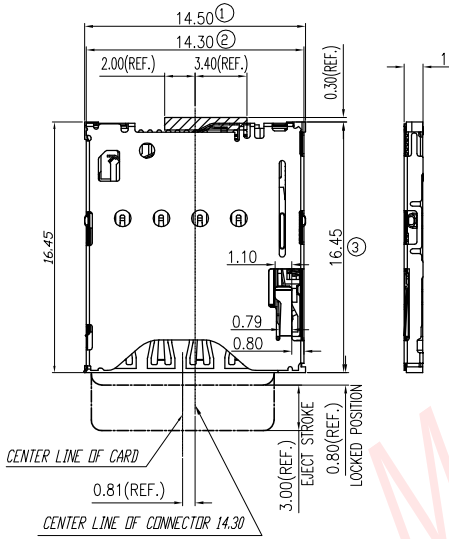

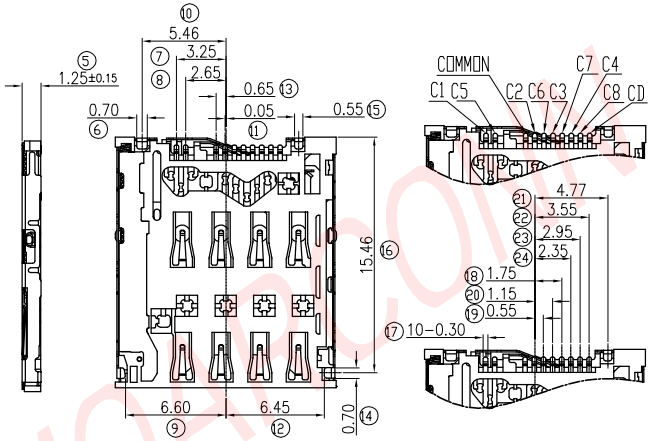

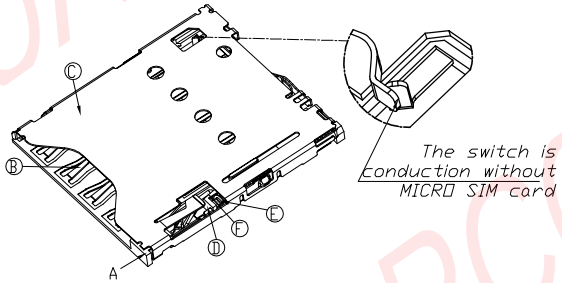

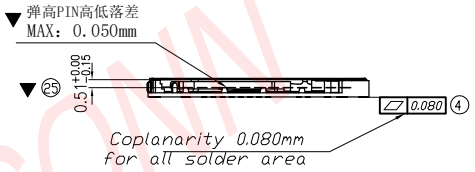

B

SPECIFICATIONS:
1.ELECTRICAL CHARACTERISTICS:
1-1. CURRENT RATING: 1A
1-2. CONTACT RESISTANCE:
1-2-1. 100mΩ MAX. (INITIAL) (FOR C1/C2/C3/C4/C5/C6/C7/C8)
1-2-2. 500mΩ MAX. (INITIAL) (FOR CD/COMMON)
1-3. DIELECTRIC WITHSTANDING VOLTAGE: 500V AC FOR ONE MINUTE.
1-4. INSULATION RESISTANCE: 100MΩ MIN. BY 500V DC.
2. MECHANICAL CHARACTERISTICS:
2-1. LIFE TEST: 5000 CYCLES MIN.
3. ENVIRONMENTAL CHARACTERISTICS:
3-1. SALT MIST TEST CONDITION: PER IEC 68-2-52, SEVERITY(3)
3-2. OPERATING TEMPERATURE: -30°~+80°
3-3. TO CONFORM TO SINGATRON HAZARDOUS SUBSTANCE FREE SPEC.
3-4. RoHS COMPLIANT PRODUCT.
3-5. HALOGEN FREE PRODUCT IDENTIFICATION MARK:
3-6. HALOGEN FREE PRODUCT IDENTIFICATION LABEL ON PACKAGING:

4. OTHER GENERAL SPEC. TO REFER "2SM2019 SERIES SPEC."
5. FOR REFLOW SOLDERING LEAD-FREE PROCESS.
6. PACKAGING: TAPE & REEL.

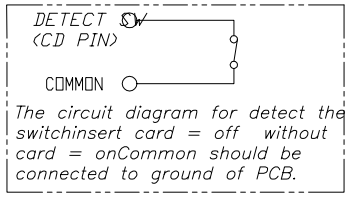

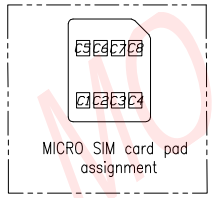

PIN NO.	PIN ASSIGNMENT
C1	SUPPLY VOLTAGE(VCC)
C2	RESET(RST)
C3	CLOCK(CLK)
C4	RESERVED FOR FUTURE USE(RFU)
C5	GROUND(GND)
C6	PROGRAMMING VOLTAGE(VPP)
C7	I/O
C8	RESERVED FOR FUTURE USE(RFU)

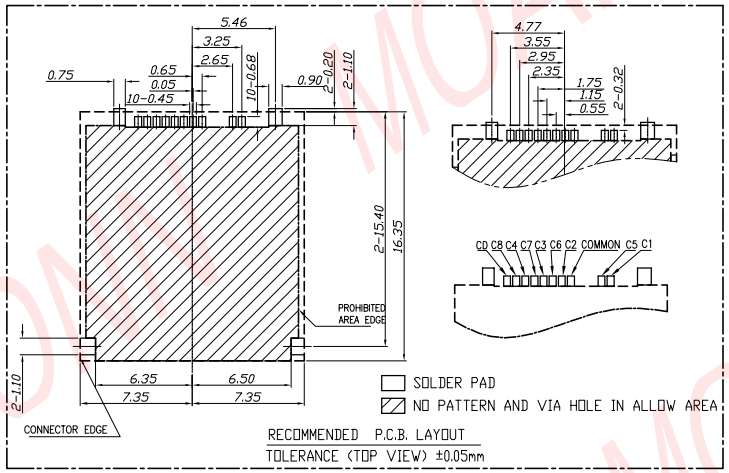

F	LINK	1	STAINLESS STEEL T=0.10	N/A
E	SPRING	1	SWP	NICKEL PLATING
D	SLIDE	1	HIGH TEMP.THERMOPLASTIC,UL94V-0 AND STAINLESS STEEL	BLACK
C	SHELL	1	SUS 301 1/2H T=0.1	NICKEL PLATING
B	CONTACT	1	C5210 EH T=0.10 4SM2019-002002	3u" GOLD PLATING ONCONTACT AREA AND SOLDER AREA ,50u" MIN NICKEL UNDER PLATING
A	HOUSING	1	LCP+35%GF S475 UL94V-0	BLACK

REVISION NO.	ECR NO.	DESCRIPTION	MARK	DATE
A	ER2008118	NEW RELEASE	PURE	2019.06.21

MOARCONN
MORE CONNECTIONS SMART FUTURE

DONG GUAN MOARCONN ELECTRONIC Co.,Ltd.

DIMENSIONS INIT: mm
UNLESS OTHERWISE SPECIFIABLE

DIMENSION	TOLERANCE
X.X: ±	0.20
X.XX: ±	0.10
X.XXX: ±	0.05
ANGULAR: ±	2°

PRODUCT NAME : MICRO SIM PUSH TYPE H1.25mm	DRAWING: PURE		DATE: 2019.06.21
PRODUCT NO. : MS125-T1161-21	CHECK:		DATE:
DRAWING NO. : D-MS125-T1161-21	APPROVED:		DATE:
	SCALE: 1:1	DWG ID: C D	REV.: A	PAGE: 1 OF 1

MOARCONN