DADISICK®

Measurement-type Single-layer Scanning Lidar

Obstacle Avoidance And Safety Protection Sensor

ELDS2027B5-2P

User Manual

CE RoHS IP65

DADISICK TECHNOLOGY LIMITED
Website: ru.dadisick.com

We reserve the right to make technical changes
2026.08.07-Ver 1.2

Table of Contents

1 Document Description — 1

1.1 Prompt Messages — 1

1.2 Content Description — 1

1.3 Explanation of Symbols and Patterns — 2

1.4 Further Reading — 3

1.5 Customer Service — 4

2 Basic Operation and Precautions — 5

2.1 Correct Usage Instructions — 5

2.2 Warnings for Incorrect Usage — 5

2.3 Network Connection Instructions — 5

2.4 Disclaimer for Equipment Damage — 5

2.5 Laser Radiation Instructions — 6

2.6 Power Supply and Rapid Start/Stop — 7

2.7 Maintenance — 7

3 Product Description — 8

3.1 Deliverables — 8

3.2 Product Features — 9

3.3 Working Principle — 10

3.3.1 Distance Measurement — 10

3.3.2 2D Scanning — 11

3.3.3 Scene Measurement and Area Monitoring — 12

3.4 Device Serial Number — 13

3.5 Device Interface — 13

3.6 Device Control and Operation Status Display — 15

3.6.1 Device Control Method — 15
3.6.2 Indicator Lights — 15
3.6.3 Front Panel Operation Buttons — 16

4 Product Applications — 17

4.1 Technical Application Topics — 17

4.1.1 Actual Measurement Range — 17
4.1.2 Relationship between Spot Diameter and Target Size — 18
4.1.3 Rain, Fog, and Dust Penetration — 18
4.1.4 False Edge Points — 19
4.1.5 Mirror Targets — 20
4.1.6 Transparent Media — 20
4.1.7 Strong Light Interference — 21

4.2 Application System Development Overview — 22

4.3 Network Configuration and Device Detection — 25

4.3.1 Network Factory Configuration — 25
4.3.2 Device Configuration Information Broadcast — 25

4.4 Area Monitoring Function User Manual and Application Development — 26

4.4.1 Working Principle — 26
4.4.2 Area Groups and Monitoring Area Groups — 28
4.4.3 Monitoring Area Group Selection Mode — 30
4.4.4 Background Self-Learning and Area Group Background Clipping — 31
4.4.5 Monitoring Modes — 32
4.4.6 Normal Target Self-Learning and Exclusion — 33
4.4.7 Forced Control — 34
4.4.8 Monitoring Signal Output — 35
4.4.9 Meteorological Conditions for Outdoor Applications — 36

4.5 I/O Interface User Manual and Application Development — 38

4.5.1 I/O Input Terminal Function Definition — 38
4.5.2 I/O Output Terminal Function Definition — 39
4.5.3 I/O Interface Network Messages — 39

4.6 Device Self-Test and Device Ready Signals — 41

4.6.1 Equipment self-test items — 41
4.6.2 Equipment readiness signals — 42
4.7 Intrinsically safe configuration — 43
4.7.1 Area monitoring signal correlation — 43
4.7.2 I/O output port timeout automatic release — 44
4.8 Power saving and life extension control — 45
4.9 Equipment control and function switches — 46
5 Equipment Installation — 48
5.1 Installation Preparation — 48
5.1.1 Basic Installation Requirements — 48
5.1.2 Installation Materials — 48
5.1.3 Installation Location Selection — 49
5.1.4 Special Reminders — 49
5.2 Installation Height and Elevation Angle — 50
5.2.1 Relationship between Installation Height and Effective Working Distance — 50
5.2.2 Height and Angle Adjustment When Multiple Radars Operate Simultaneously — 50
5.3 Using mounting brackets — 52
5.4 Using protective covers — 54
5.5 Adjusting the scanning range — 54
6 Electrical installation — 57
6.1 Installation steps — 57
6.2 Installation preparation — 57
6.2.1 Power Supply — 57
6.2.2 Power Requirements and Temperature Characteristics for Automatic Heating — 58
6.2.3 Grounding Requirements — 59
6.2.4 Wire Requirements — 60
6.2.5 PC Connection — 60
6.3 Device Interface Signal Definitions — 61
6.3.1 Power Interface Signal Definitions — 61
6.3.2 Network Interface Signal Definitions — 61
6.3.3 I/O Interface Signal Definitions — 62

6.4 Interface cable wiring — 63

6.5 I/O interface external reference circuit — 64

7 Equipment configuration and commissioning test — 66

7.1 Configuration and test procedures — 66

7.2 Software and equipment preparation — 66

7.3 Basic testing — 67

7.4 Equipment configuration — 67

7.5 Commissioning test procedures — 69

8 Equipment Maintenance — 71

8.1 Operation and Maintenance — 71

8.2 Equipment Replacement — 71

9 Troubleshooting — 72

10 Technical Specifications — 73

10.1 Data Manuals — 73

10.2 Measurement Coordinate System/Scan Range/Measuring Scope — 76

10.3 Equipment Outline Drawings — 77

10.4 Parts Outline Drawings — 78

11 Appendix — 85

11.1 Table of Illustrations — 85

11.2 Table of Tables — 86

1 Document Description

1.1 Prompt Message

This manual provides instructions and precautions for the correct use of the Freescale ELDS2027B5-2P LiDAR product. For safe use of this product, users should also note:

* Comply with necessary safety production guidelines;
* Follow ELDS2027B5-2P workplace safety operating procedures and general safety regulations.

This manual is intended for electrical and electronics professionals.

Important Note	Before operating the ELDS2027B5-2P, please carefully read this manual to familiarize yourself with its features and functions. This manual does not cover the use of other devices and equipment in the application system where the ELDS2027B5-2P is installed and used. For such information, please refer to the relevant documentation for those devices and equipment.

1.2 Content Description

This manual is intended to provide technicians with information on the installation, electrical connections, equipment configuration, and maintenance of the ELDS2027B5-2P. Please read the chapters in this manual sequentially. The contents of this manual (in order) include:

* 2. Basic Operation and Precautions
* 3. Product Description
* 4. Product Application
* 5. Equipment Installation
* 6. Electrical Installation
* 7. Equipment Configuration
* 8. Equipment Maintenance
* 9. Troubleshooting
* 10. Technical Specifications

Table 1.1 Basic Product Information

Operating Environment	Indoor / Outdoor
Light Source	Infrared Laser (905nm)
Laser Safety Rating	Class I (GB 7247.1-2012, Eye Safety)
Scanning Angle Range	300° (-60° ~ 240°)
Scanning Frequency	25Hz
Scanning Angle Resolution	0.5°
Measurement Range	0.1m - 20m
10% Reflectivity Range	15m
Built-in Application	Area monitoring
Operating Voltage	DC 10V — 30V
Power Consumption	3.4W (measurement), 7.6W@DC12V / 6W@DC24V (heating)
Enclosure Protection Rating	IP67(GB 4208-2008)
Weight	0.6Kg
Dimensions (L x W x H)	80 × 85 × 102(mm)
Operating Temperature Range	-25℃ - +50℃
Storage Temperature Range	-30℃ - +70℃
Ambient Illumination Range	0lux - 80,000lux

Related Reading

For complete technical information, please read "10 Technical Specifications".

Please use the "LiDAR Diagnostic and Configuration Software (FILPS)" to diagnose and configure the ELDS2027B5-2P. For instructions on how to use FILPS, please read the "LiDAR Diagnostic and Configuration Software (FILPS) User Manual".

1.3 Explanation of Symbols

This manual uses the following symbols to mark various important precautions. Special attention should be paid when reading to avoid personal injury and equipment damage.

Danger

Meaning: An imminent dangerous situation that, if not prevented, could cause serious personal injury.

Warning

Meaning: A potential dangerous situation that, if not prevented, could cause serious personal injury.

Handle with caution

Meaning: A potential dangerous situation that, if not prevented, could cause minor personal injury.

Note	Meaning: Potentially harmful situations that, if not prevented, could damage the equipment.
Important Tips	Meaning: Helpful suggestions and tips for efficient and smooth use of the equipment.
Key Points	Meaning: Information about important equipment characteristics.
Explanation	Meaning: Background information on technical issues.
Related Reading	Meaning: Relevant documents that can provide more information.
Software Operation	Meaning: Equipment checks and configurations that require the use of FILPS software.

1.4 Further Reading

Main Point	Complete information about the ELDS2027B5-2P can be downloaded online from the following website: https://ru.dadisick.com/comm48/Download-Center.htm

1.5 Customer Service

If you have any questions about the ELDS2027B5-2P, please feel free to contact us. Our technical support contact information is as follows:

DADISICK TECHNOLOGY LIMITED

Website: **ru.dadisick.com**

2 Basic Operations and Precautions

This chapter explains the basic operating procedures and precautions related to personal safety and equipment safety. Please read it carefully before using the ELDS2027B5-2P.

2.1 Correct usage method

The ELDS2027B5-2P is an optical sensor for non-contact distance measurement. It can be used independently or in a network, primarily for accurate measurement of the surrounding environment and target contours. It can also be used to build security, protection, positioning, and navigation systems.

The ELDS2027B5-2P should only be operated by qualified professionals and used in appropriate environments.

Important Note	For information on the environmental requirements for using the ELDS2027B5-2P, please refer to "10.1 Datasheet".

2.2 Warning about incorrect usage

- The ELDS2027B5-2P is for safety warning purposes only and cannot provide physical protection for personal safety in hazardous environments;
- The ELDS2027B5-2P must not be used in hazardous environments where there is an explosive hazard;
- The user assumes all risks associated with using accessories not provided by Freescale.

2.3 Networking Instructions

The ELDS2027B5-2P uses standard TCP/IP technology to achieve device networking. In actual network setup, the following prerequisites must be ensured:

- Users are responsible for ensuring the integrity and confidentiality of device data transmitted over the network;
- Necessary network security measures, such as network isolation, firewalls, and antivirus software, must be planned and implemented by the user.

2.4 Disclaimer for Equipment Damage

DADISICK shall not be liable for equipment damage caused by the following reasons:

- Failure to carefully read the user manual;

- Failure to use the equipment correctly as required;
- Operation by unqualified personnel;
- Disassembly of the equipment without DADISICK approval;
- Modification of the equipment without DADISICK approval;
- Technical modifications to the equipment;
- Use of self-made parts.

2.5 Laser Radiation Description

The ELDS2027B5-2P uses an infrared laser with a wavelength of 905nm for measurement. The laser beam is invisible to the naked eye.

⚠ Operate with caution

ELDS2027B5-2P meets the Class I laser safety requirements specified in GB 7247.1-2012 and is harmless to the eyes and skin under normal use. However, improper use may pose safety risks. The main precautions are as follows:

- Do not open the ELDS2027B5-2P casing. The ELDS2027B5-2P will not stop emitting laser light when the casing is opened while it is powered on.
- Do not look directly at the laser emission surface of the ELDS2027B5-2P for extended periods, especially children, as this may cause blindness.

The laser emitting surface of the ELDS2027B5-2P is an optical transparent cover, and the laser warning sign is located on the top cover of the equipment, as shown in "Figure 2.1 Laser emitting surface and laser warning sign".

Figure 2.1 Laser emission surface and laser warning sign

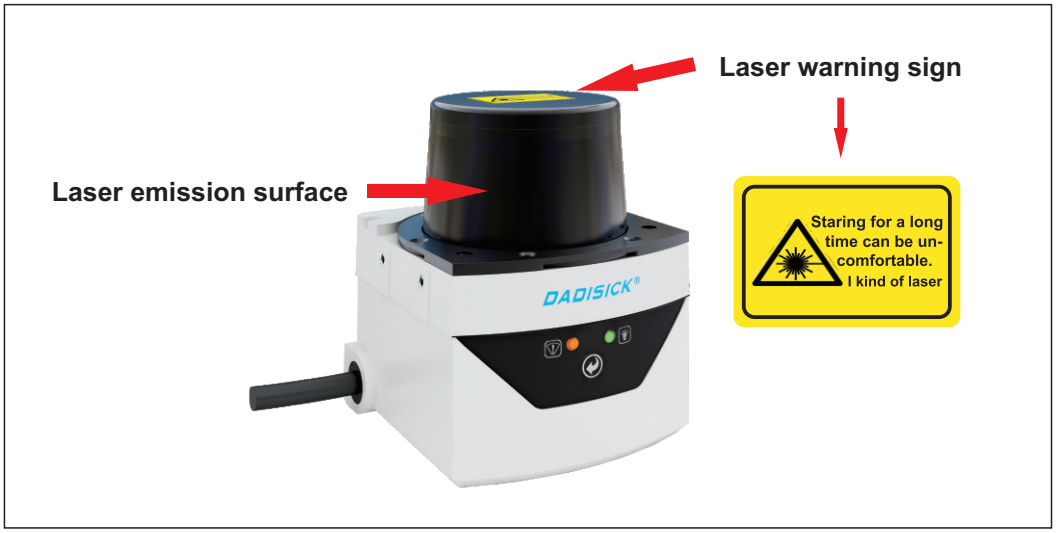

2.6 Power supply and rapid start/stop

The ELDS2027B5-2P's power supply includes a measurement power supply and a heating power supply, powered via a DC002 type circular waterproof power socket on the side of the device, as shown in "Figure 2.2 Power Socket". The required power voltage is DC10V–30V. The measurement power supply consumes 3.4W under normal operating conditions and a maximum power consumption of 3.9W. The ELDS2027B5-2P has a built-in automatic heating module that automatically starts heating when the internal temperature is below 28℃ and automatically stops heating when it is above 40℃. The heating module uses a heating power supply. When heating is activated, the heating power consumption is 7.6W under a DC12V supply voltage and 6W under a DC24V supply voltage. Please provide the power supply according to the above standards during use.

Figure 2.2 Power socket

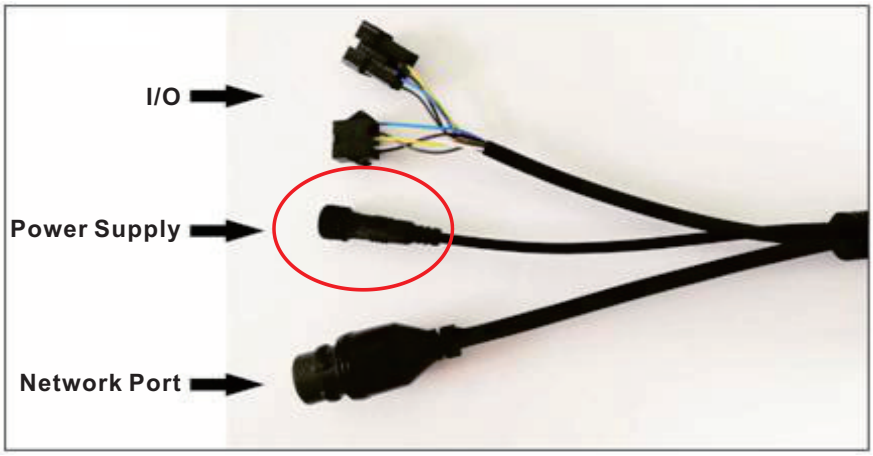

Important Note

Please read "10.1 Datasheet" carefully to understand the complete power supply requirements of ELDS2027B5-2P. Users should follow local regulations to provide necessary protection for the power supply cables to avoid short circuits or power overload; in addition, an emergency circuit breaker should be installed on the power supply cables to quickly disconnect the power supply in an emergency.

- Shutdown method: Turn off the power or unplug the power cable from the power outlet;
- Power-on method: Connect the power cable to the power outlet and turn on the power switch.

The ELDS2027B5-2P's device configuration information is stored on non-volatile storage media; starting and stopping the device will not result in the loss of this information.

2.7 Maintenance

Notice

The ELDS2027B5-2P must be serviced by employees of DADISICK or a DADISICK-designated organization. Service by other personnel may result in damage to the equipment, and DADISICK will not be liable for any subsequent repairs in such cases.

3 Product Description

3.1 Deliverables

The product deliverables for ELDS2027B5-2P are shown in Table 3.1, "Product Deliverables List".

Table 3.1 Product Deliverables List

Deliverables	Quantity	Unit	Description
Certificate of Conformity	1	piece	
Warranty Card	1	piece	
	1	Piece	ELDS2027B5-2P LiDAR
	1	Piece	Power Cable
	1	Set	Waterproof RJ45 Connector Cover
	1	Piece	Simple Seating Bracket
	1	Set	1. M4X8 Washer Screws x 4 2. Shock-absorbing Rubber Pads x 8 3. M3 Anti-loosening Nuts x 4 4. M3 Flat Washers x 4 5. Ø4X25X3 Locking Screws x 4
Simple Installation Tools	1	Piece	M4 Hex Wrench

Detailed product documentation, accessory information, diagnostic and configuration software (FILPS) user manual, application development SDK, etc. for the ELDS2027B5-2P can be obtained from the following website:

https://ru.dadisick.com/comm56/Laser-Scanning-Radars-Download.htm

3.2 Product Characteristics

Table 3.2 Product Characteristics

Operating Environment	➢ Supply voltage range: DC 10V – 30V; ➢ Power consumption: 3.4W (measured), 7.6W@DC12V / 6W@DC24V (heating); ➢ Comprehensive outdoor working capability: dirt-resistant, sun-resistant, and supports rain, fog, and dust penetration; ➢ IP67 enclosure protection rating; ➢ Operating temperature range: -25℃ – +50℃;
Distance Measurement	➢ Pulsed time-of-flight measurement technology; ➢ 905nm infrared laser measurement, Class I safe laser (GB 7247.1-2012, eye-safe); ➢ Maximum measurement range 20 meters, 10% reflectivity range 15 meters;
Scanning	➢ Mechanical scanning method employed; ➢ 300° scanning range, scanning angle resolution: 0.5°; ➢ Scanning frequency: 25Hz;
Device Interface	➢ Ethernet Interface Functions: Device configuration / Measurement data output / Area monitoring signal output. ➢ I/O Interface Functions: Device readiness indication, area monitoring function operation control and monitoring signal output, peripheral control.
Built-in Applications	**Area Monitoring** ➢ Monitoring modes: Point monitoring / Target width monitoring / Contour line monitoring; ➢ 16 modifiable preset area groups, supporting background contour self-learning; ➢ Up to 16 concurrent working area groups; ➢ Can detect targets of any shape, supporting normal target self-learning function; ➢ Perform disarming and forced alarm via I/O input terminals; ➢ Output area monitoring signals via I/O output terminals and Ethernet (TCP packets); ➢ Guide network cameras (IPCs) to perform video positioning and tracking of alarm locations and targets via Ethernet and ONVIF protocol; ➢ Supports PC-less configuration.
Availability Reliability	➢ Resistant to sunlight and dirt, with rain, fog, and dust penetration capability (optional); ➢ Equipment self-diagnosis capability, including detection of dirty light-transmitting cover, close-range obstruction, excessive temperature, and obstruction by dense fog; ➢ Equipment self-diagnosis information is output via indicator lights and TCP packets.

Figure 3.1 Measurement coordinate system/scan range/range

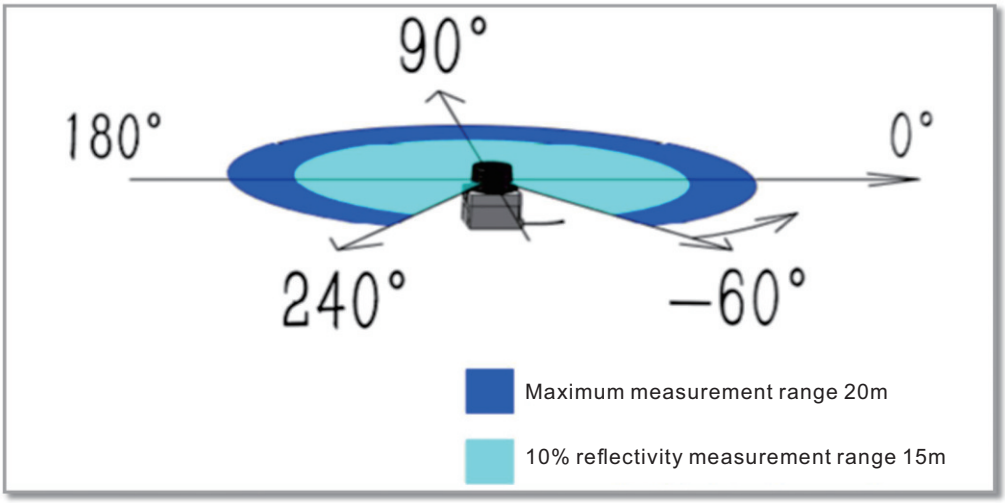

3.3 Working Principle

3.3.1 Distance Measurement

The basic working principle of ELDS2027B5-2P distance measurement is laser ranging based on time-of-flight measurement. ELDS2027B5-2P emits a laser pulse and measures the time it takes for the pulse to return after being reflected from the surface of the target being measured, and then converts it into distance data, as shown in "Figure 3.2 Working Principle of Time-of-Flight Measurement".

Figure 3.2 Working principle of time-of-flight measurement

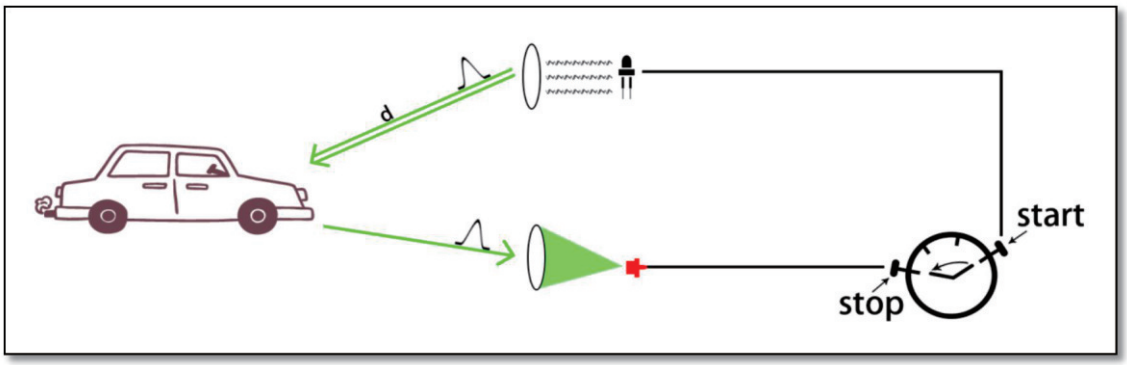

The ELDS2027B5-2P features multiple echo analysis capabilities. In rainy, foggy, or dusty working environments, atmospheric impurities can reflect the ranging laser pulse, forming reflected echo pulses that arrive at the photoelectric receiving system along with the reflected echo pulse from the target being measured. The ELDS2027B5-2P analyzes all received reflected echo pulses, eliminates interfering pulses, and outputs the true distance data of the target being measured, as shown in "Figure 3.3 Reflected Echo Filtering".

Figure 3.3 Reflection Echo Filtering

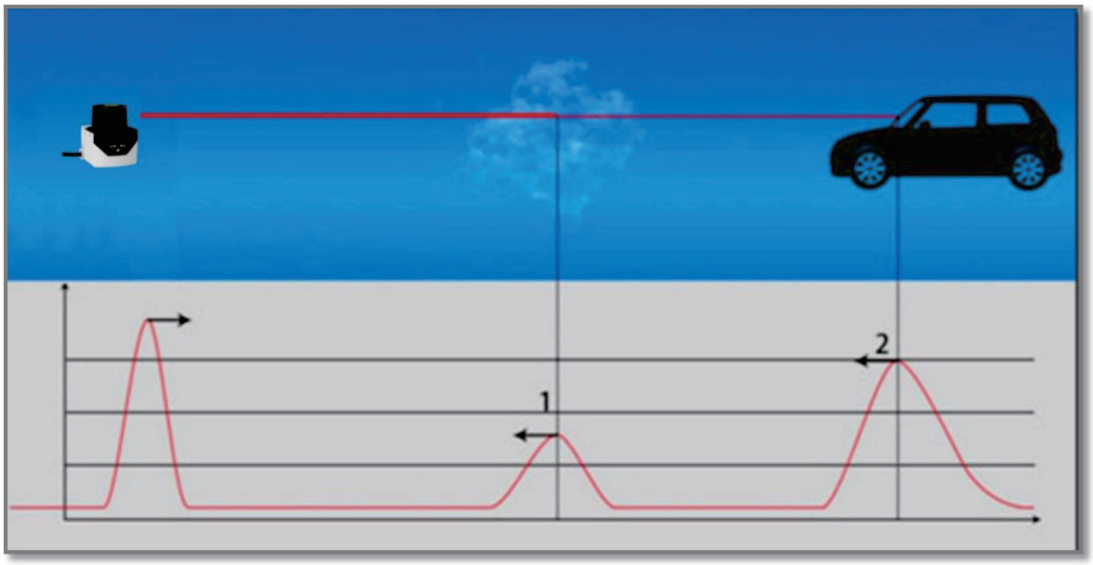

3.3.2 Two-Dimensional Scan

The ELDS2027B5-2P deflects the ranging laser pulse by 90° using a mirror at a 45° angle to the original emission optical path. This mirror is driven by a motor to rotate, with its rotation axis parallel to the original emission optical path. Thus, the actual ranging optical path is distributed on a scanning plane perpendicular to the rotation axis, and the ranging azimuth angle is the same as the motor's rotation azimuth angle, achieving two-dimensional optical scanning. This allows the distances of various points in the external environment on the cross-section of the ranging scanning plane to be obtained, as shown in "Figure 3.4 Scanning Measurement Mechanism" and "Figure 3.5 Two-Dimensional Cross-Section Scan". The ELDS2027B5-2P uses specific TCP/UDP network packets to provide users with two-dimensional measurement data at a fixed scanning frequency via an Ethernet port.

Figure 3.4
Scanning Measurement Mechanism

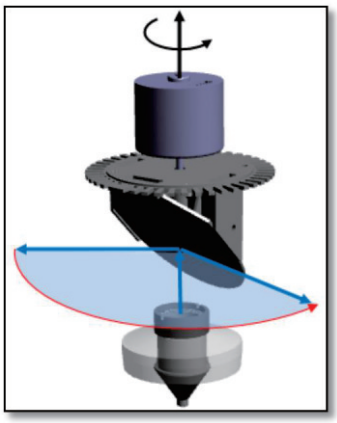

Figure 3.5
Two-Dimensional Cross-Section Scanning

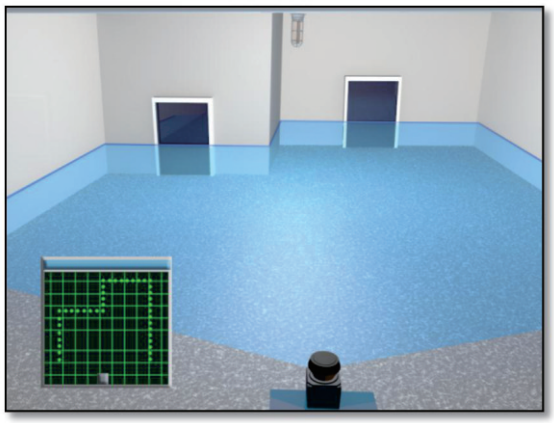

3.3.3 Scene Measurement and Area Monitoring

By analyzing and processing distance data obtained from 2D scanning, the application system can measure and monitor a scene, detect and locate various targets within the scene, measure their shapes, and perform scene analysis through intelligent algorithms. It can also perform spatiotemporal tracking, type recognition, and behavior analysis of targets, and finally output analysis results according to application requirements, such as alarms, sorting, and guidance.

The ELDS2027B5-2P has a built-in area monitoring function, enabling perimeter protection, intrusion detection, and contour monitoring, as shown in Figure 3.6, "Area Monitoring Function." The area monitoring function can be configured through the "LiDAR Diagnostic and Configuration Software (FILPS)" or by setting monitoring arming conditions via I/O input terminals. Monitoring results are output via TCP network packets and also in real-time through the ELDS2027B5-2P's I/O output terminals.

The ELDS2027B5-2P has a built-in network camera (IPC) control module supporting the ONVIF protocol, enabling direct control of network cameras via Ethernet ports for video positioning and tracking of alarm locations or monitored targets.

The ELDS2027B5-2P's built-in area monitoring function also supports a PC-free configuration mode. Different shapes and sizes of built-in monitoring area groups can be selected via the I/O input terminals. The background self-learning function can also be executed via the front panel operation buttons, allowing the ELDS2027B5-2P to automatically adapt to the current operating environment, completing device configuration and deployment. This PC-free configuration mode provides flexibility for mobile applications and industrial site safety protection applications.

Figure 3.6 Regional monitoring function

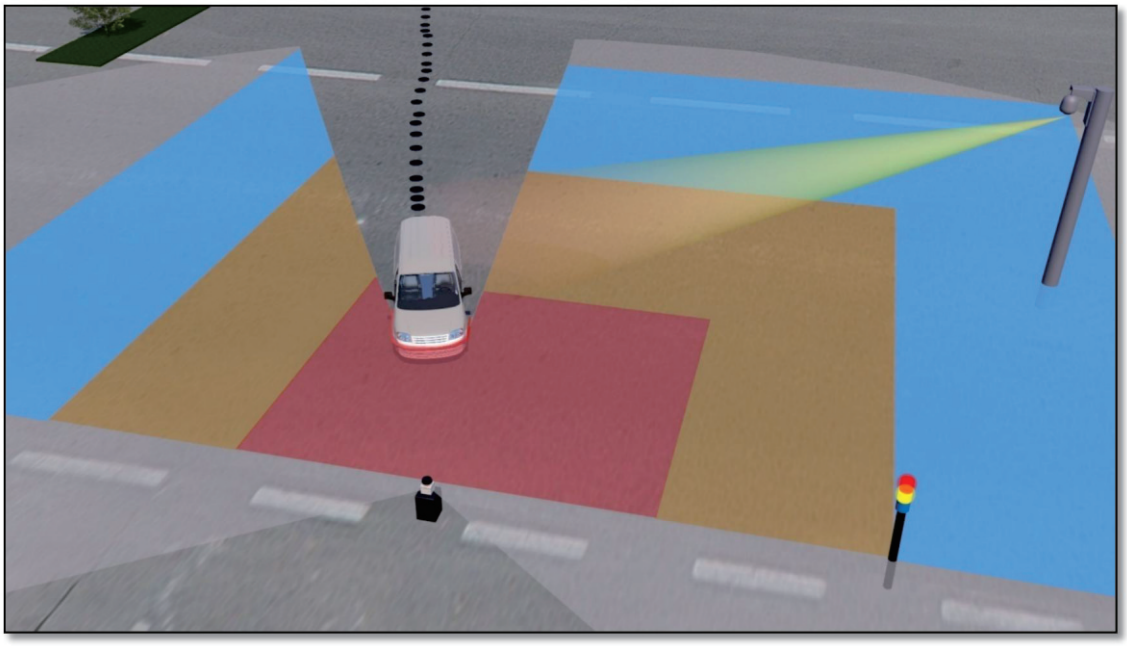

3.4 Equipment Model

Figure 3.7 Equipment Model ELDS2027B5-2P

3.5 Device Interface

The interface cable on the side of the ELDS2027B5-2P is a composite cable, 1 meter in length, with three external interfaces, including a "power interface", an "Ethernet interface" and an "I/O interface", as shown in "Figure 3.8 Device Interfaces". The types of each interface are shown in "Table 3.3 Device Interfaces".

Figure 3.8 Device Interface

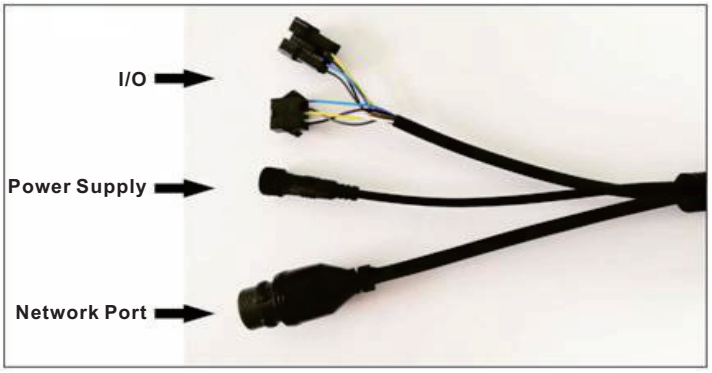

Table 3.3 Device Interfaces

Socket	Type	Number of pins
Power connector	Industrial waterproof connector	2
Ethernet interface	RJ45 socket	4
I/O interface	SM2.54, 5P, Female / Male	10

The ELDS2027B5-2P has 16 leads with different wire colors and markings inside the side interface cable, including three sets of signals: "Power Interface", "Ethernet Interface" and "I/O Interface". The signal definitions are shown in "Table 3.4 Device Interface Signal Definitions".

Table 3.4 Device Interface Signal Definitions

Interface	Signal	Description
Power interface	V	Power supply positive terminal
	GND	Power supply negative terminal
Ethernet interface	RX+	Data receive positive terminal
	RX-	Data receive negative terminal
	TX+	Data transmit positive terminal
	TX-	Data transmit negative terminal
I/O interface	IN1	General input 1# positive terminal
	IN2	General input 2# positive terminal
	IN3	General input 3# positive terminal
	IN4	General input 4# positive terminal
	GND IN	General input common negative terminal
	OUT1A	General output 1#
	OUT2A	General output 2A#
	OUT3A	General output 3#
	OUT4A	General output 4#
	OUT2B	General output 2B#

Related Reading

For the signal definitions of each lead of the interface cable, please refer to "6.3 Device Interface Signal Definition"; for the electrical characteristics of each signal, please refer to "10.1 Datasheet".

3.6 Equipment Control and Operating Status Display

3.6.1 Equipment Control Methods

After power is connected, the ELDS2027B5-2P automatically enters the operating state according to the current system configuration, requiring no intervention. If you need to control or configure the ELDS2027B5-2P, or query its operating status, there are three methods:

- **Diagnostic and Configuration Software (FILPS):** FILPS interacts with the ELDS2027B5-2P via TCP packets through the Ethernet interface to perform comprehensive configuration and operational control of the ELDS2027B5-2P. For details, please read "7 Device Configuration and Trial Operation Testing";
- **Front panel SLR operation buttons :** The SLR operation buttons can be used to enable two functions: background self-learning and background deletion. For details, please read "3.6.3 Front panel operation buttons";
- **I/O Input Terminals:** By inputting valid control levels into the I/O input terminals, control functions such as area monitoring disarming, forced alarm, power saving, and life extension can be realized. For details, please read "4.5 I/O Interface Usage Instructions and Application Development".

3.6.2 Indicator Lights

After the ELDS2027B5-2P starts working, the basic working status is displayed by the indicator lights on the front panel. The meaning of each indicator light is shown in "Table 3.5 Indicator Light Description".

Table 3.5 Indicator Light Description

	Name	Description
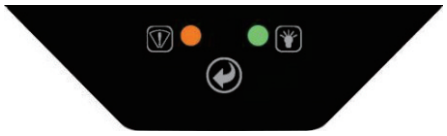	ERR	Fault Indicator Light ✧ Activation Status: On (approx. 27 seconds) ✧ Off: No fault ✧ On: Internal fault / Measurement abnormality[1] ✧ Long flashing (0.5Hz): High temperature / Low temperature alarm ✧ Short flashing (1Hz): Dirty/obstructed light cover[2]
	HTR	Operating Status Indicator Lights ✧ Startup Status: Off ✧ Still Off: Device not in measurement / preparing to restart ✧ Still On: Device measuring normally ✧ Blinking 1 (0.5Hz): Monitoring signal output present ✧ Blinking 2 (1Hz): Self-learning in progress ✧ Blinking 3 (2.5Hz): Preparing to start self-learning

1. Includes measurement stoppage and motor shutdown;
2. Includes obstruction by dense fog and obstruction of the monitoring area.

3.6.3 Front panel operation buttons

After the ELDS2027B5-2P starts working, the background self-learning function of the area monitoring function can be realized through the SLR operation button on the front panel. The definitions of each operation are shown in "Table 3.6 Instructions for using the SLR operation button on the front panel".

Figure 3.9 Front panel SLR operation buttons

Table 3.6 Instructions for using the SLR operation buttons on the front panel

Press Duration	Function Definition	Operation	Device Status	Indicator Lights
1s - 5s	Start background self-learning	Press (1s — 5s)	Preparing to begin background self-learning	Flashing 3
		Release (0s — 6s)	Preparing to begin background self-learning	Flashing 3
		Release (6s — 12s)	Background self-learning, restarting device	Flashing 2
≥ 5s	Restart device	Press (≥ 5s)	Preparing to delete background	Lights off
		Release	Delete background, restarting device	No effect

Key Points

After the ELDS2027B5-2P enters the "Prepare to Start Background Self-Learning" and "Start Self-Learning" states, if the SLR operation button is pressed , the background self-learning will continue until it is completed, and the button operation will not have any effect.

After the equipment is configured, to prevent accidental changes to the background of the area monitoring function due to misoperation of the SLR operation button, the SLR operation button can be disabled using the "Diagnostic and Configuration Software FILPS".

4. Product Application

4.1 Technical Application Topic

In practical applications, the range and measurement performance of the ELDS2027B5-2P are affected by many environmental factors. These factors and their effects need to be given special attention, and appropriate measures should be taken to address them.

4.1.1 Actual measuring range

The actual range of the ELDS2027B5-2P for a specific target is affected by the following factors:

- **Actual diffuse reflectance:** This refers to the actual diffuse reflectance of the portion of the target surface illuminated by the measurement laser spot emitted by the ELDS2027B5-2P. Actual diffuse reflectance depends not only on the material but also on the surface orientation. A higher actual diffuse reflectance results in a longer actual measurement range.

- **Reflection area:** The area of the target surface covered by the laser spot. A larger coverage area results in a longer actual measurement distance.

- **Light transmittance mask contamination:** Contamination of the ELDS2027B5-2P's light transmittance reduces its light transmission performance. The greater the decrease in light transmission performance, the worse the measurement capability. When the light transmittance drops to 60%, the measurement capability may be completely lost.

- **Atmospheric conditions:** The actual measurement capability of the ELDS2027B5-2P is also affected by atmospheric conditions, especially when working outdoors. The worse the light propagation capability of the atmosphere, the lower the actual measurement capability of the ELDS2027B5-2P. In extreme weather conditions (such as dense fog), the measurement capability may be completely lost.

Key Points

When using ELDS2027B5-2P to build an application system, the ELDS2027B5-2P's workload range needs to be set based on a comprehensive consideration of various application requirements. These factors include:

- the minimum actual diffuse reflectance and minimum size of the target to be detected;

- the cleanliness of the ELDS2027B5-2P's working environment and whether it can be maintained in a timely manner, such as cleaning the light-transmitting cover.

4.1.2 Relationship between spot diameter and target size

In practical applications, the range and measurement performance of the ELDS2027B5-2P are affected by many environmental factors. These factors and their effects need to be given special attention, and appropriate measures should be taken to address them.

$$r = r_0 + \alpha \cdot d$$

in:

r_0 is the aperture of the light spot, and for ELDS2027B5-2P, r_0 = 0.008m;

α is the beam divergence angle, for ELDS2027B5-2P, α = 0.0125.

Explain	The greater the measurement distance, the larger the spot diameter. For a given target, the lower the probability that the spot will completely hit the target surface, and the lower the effective reflective area of the target surface. Therefore, for targets with the same actual diffuse reflectance, the smaller the target size, the shorter the actual measurement range.

4.1.3 Rain, fog, smoke and dust penetration

When the rain, fog, and dust penetration function is enabled, the ELDS2027B5-2P will filter weak reflection measurement data within a certain distance range to prevent measurement results triggered by rain, fog, and dust from replacing the measurement results of real targets at a greater distance, as shown in "Figure 3.3 Reflection Echo Filtering". However, this will also reduce or disable the ELDS2027B5-2P's measurement capability for targets with very low overall reflectivity (e.g., less than 5%) or small targets (e.g., flying insects, linear targets) within close range (e.g., 2-4 meters).

Software operation	For instructions on enabling and disabling the rain, fog, and dust penetration function, please refer to Section 6.3, "Running Configuration Parameters," of the "LiDAR Diagnostic and Configuration Software (FILPS) User Manual."

Key Points	Whether to enable the rain, fog, and dust penetration function should be carefully selected based on application requirements.

4.1.4 False Edge Points

When the laser spot hits the edge of the target, the ELDS2027B5-2P will also receive two reflected echoes, one from the target surface and the other from the background at the same angle, as shown in "Figure 4.1 Edge Point Measurement".

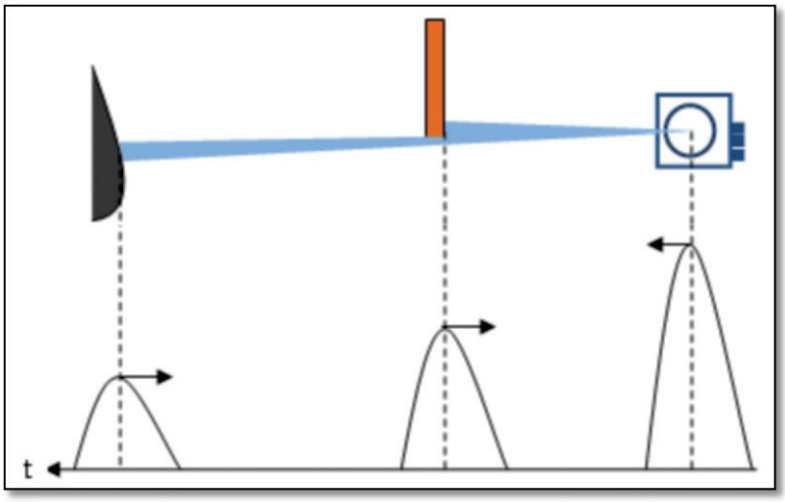

If the target and background are close together, the two reflected echoes will overlap, leading to inaccurate measurements and the creation of "false edge points" that are farther from the actual target edge, as shown in Figure 4.2. The difference between the measured distance of a false edge point and the true distance can be as large as 15 cm.

Figure 4.2 False edge points

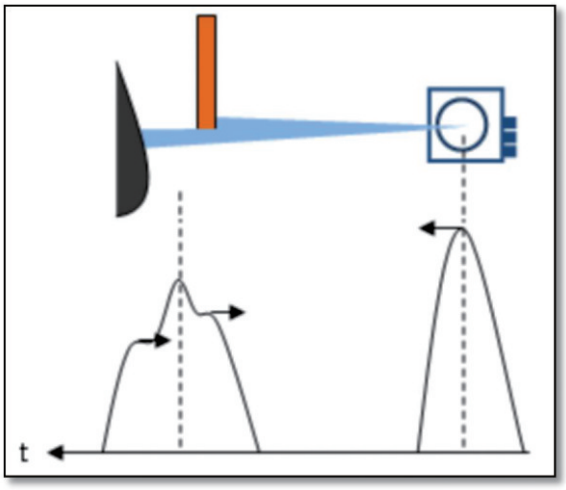

Key Points

False edge points can affect the accurate positioning of targets. In applications that require precise target positioning, target edge points should be treated specially.

4.1.5 Mirror Target

When measuring a mirror target, it can only be effectively measured when the target surface is perpendicular to the incident laser. If the laser incident angle is not perpendicular, its actual diffuse reflectivity is very low, which makes it impossible to measure effectively. The actual measured result is the distance of the mirror target on the path of the reflected light, as shown in "Figure 4.3 Mirror Measurement".

Figure 4.3 Mirror measurement

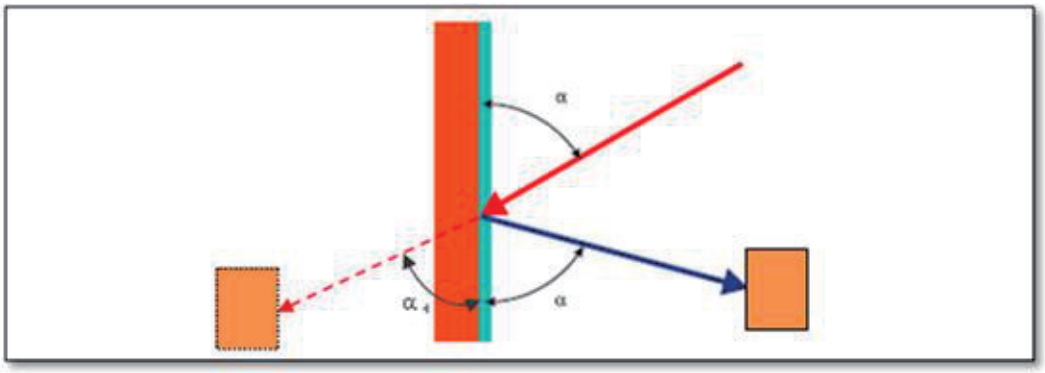

4.1.6 Transparent media

When a transparent medium (such as clean water) is present in the surrounding environment, the target located inside or behind the transparent medium can be measured. Because light is refracted in the transparent medium, the target being measured is actually located on the refracted light path, while the measurement result is located on the straight light path, resulting in a deviation in the measured target position, as shown in "Figure 4.4 Measurement in Transparent Medium".

Figure 4.4 Measurement in transparent media

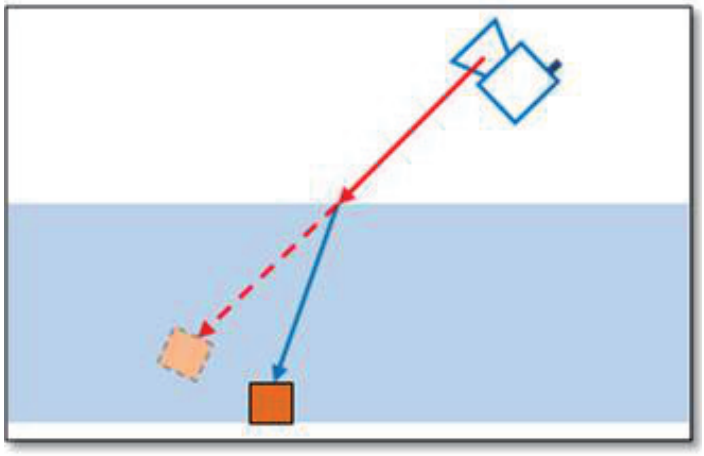

In addition, the ELDS2027B5-2P may receive two reflected echoes: one from the actual target surface inside or behind the transparent medium, and the other from diffuse reflection from an imperfectly clean transparent medium surface. In this case, the measurement result is uncertain, as it could be from the medium surface or the actual target.

If the surface of the transparent medium is close to a mirror (e.g., glass), the measurement laser pulse emitted by the ELDS2027B5-2P will be reflected and hit other targets on the reflected light path, which may also generate a third reflected echo. These echoes may form a complex overlapping relationship depending on the length of the actual light path, resulting in uncertain measurement results, as shown in "Figure 4.5 Measurement of Mirror-like Transparent Medium".

Figure 4.5 Measurement of a mirror-transparent medium

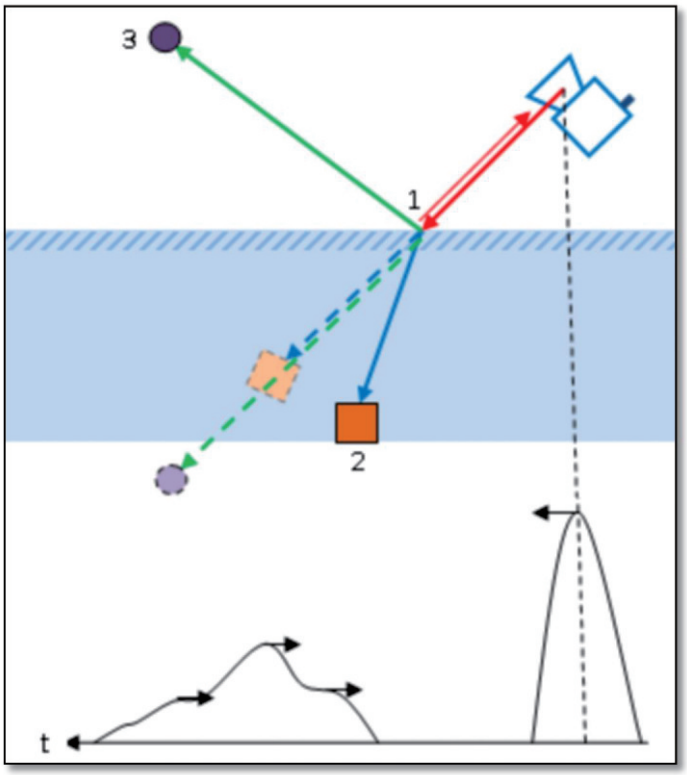

Key Points

In practical applications, transparent media in the environment, especially those with near-mirror surfaces, require special treatment to avoid unstable or erroneous measurement results. Specific treatments could include applying a diffuse reflective, semi-transparent treatment to the media surface to reduce transparency and reflectivity, or shielding these areas when processing measurement data.

4.1.7 Strong light interference

Key Points

If the ELDS2027B5-2P's light-transmitting cover is continuously exposed to a strong light source parallel to the scanning surface, the reflected echo from the target within the illuminated scanning range may be overwhelmed by the incident light. Furthermore, the incident light may trigger measurements, resulting in unstable and incorrect results, leading to measurement failure. It may also cause a false alarm indicating a "dirty light-transmitting cover." Such situations should be avoided during actual deployment.

4.2 Overview of Application System Development

The ELDS2027B5-2P is a cost-effective and easy-to-use measurement-type single-layer scanning LiDAR, primarily designed for indoor applications but also capable of supporting less demanding outdoor applications. For AGV obstacle avoidance and work vehicle collision prevention in mobile installations, as well as safety protection applications in static installations, the ELDS2027B5-2P's technical specifications ensure it meets application requirements. Furthermore, its compact size and targeted interface design facilitate integration into application systems.

When developing application systems using the ELDS2027B5-2P, the application system interacts with the ELDS2027B5-2P primarily via an Ethernet interface using UDP broadcast messages and TCP/UDP messages. The acquired information is used for further processing, and the ELDS2027B5-2P is controlled to fulfill application requirements. Capable functions include:

- Obtain ELDS2027B5-2P configuration information;
- Acquire distance measurement data and device operating status;
- Read and control I/O ports;
- Monitoring information from area monitoring functions, etc.;
- Perform real-time control of the device;
- Process measurement data and monitoring information using application algorithms according to application requirements.

The network packets used by ELDS2027B5-2P are shown in "Table 4.1 Application Development Network Packets", which are defined in detail in the "LiDAR Application Development SDK".

Related Reading

For detailed information on network messages, please refer to Section 4, "LIM Overview," of the "LiDAR Application Development SDK User Manual."

Key Points

For applications with high real-time requirements, the ELDS2027B5-2P's I/O interface input/output terminals can be used directly for alarm control, alarm alerts, and peripheral control. For AGV and industrial site safety protection applications, the built-in monitoring area groups can be selected via the I/O interface input terminals, enabling PC-free configuration.

For information on I/O interface functions and application development, please read "4.5 I/O Interface User Manual and Application Development".

Table 4.1 Application Development Network Messages

Function	Message Type Code	Initiator	Response Message
Heartbeat	LIM_CODE_HB	Application side	LIM_CODE_HBACK
Heartbeat Response	LIM_CODE_HBACK	ELDS2027B5-2P	none
Measurement Data	LIM_CODE_LMD	ELDS2027B5-2P	none
Request Measurement Data	LIM_CODE_START_LMD	Application side	LIM_CODE_LMD
Request Measurement Data Response	LIM_CODE_START_LMD_ACK	ELDS2027B5-2P	none
Stop Measurement Data	LIM_CODE_STOP_LMD	Application side	LIM_CODE_STOP_LMD_ACK
Stop Measurement Data Response	LIM_CODE_STOP_LMD_ACK	ELDS2027B5-2P	none
Query Measurement Data Scan Angle Table	LIM_CODE_NATBL_QUERY	Application side	LIM_CODE_ NATBL
Measurement Data Scan Angle Table	LIM_CODE_ NATBL	ELDS2027B5-2P	none
Query Device Ready Signal	LIM_CODE_DEVICE_STATUS_QUERY	Application side	LIM_CODE_DEVICE_STATUS
Device Ready Signal	LIM_CODE_DEVICE_STATUS	ELDS2027B5-2P	none
Query Area Monitoring Signal	LIM_CODE_FMSIG_QUERY	Application side	LIM_CODE_FMSIG
Area Monitoring Signal	LIM_CODE_FMSIG	ELDS2027B5-2P	none
Query I/O Status	LIM_CODE_IOREAD	Application side	LIM_CODE_IOSTATUS
Set I/O Output Status	LIM_CODE_IOSET	Application side	LIM_CODE_IOSTATUS
Cancel I/O Settings	LIM_CODE_IOSET_RELEASE	Application side	LIM_CODE_IOSTATUS
I/O Status	LIM_CODE_IOSTATUS	ELDS2027B5-2P	none
Device Alarm Query	LIM_CODE_ALARM_QUERY	Application side	LIM_CODE_ALARM LIM_CODE_DISALARM
Device Alarm	LIM_CODE_ALARM	ELDS2027B5-2P	none
Device Alarm Defuse	LIM_CODE_DISALARM	ELDS2027B5-2P	none
Device Configuration Information	LIM_CODE_LDBCONFIG	ELDS2027B5-2P	none
Start Device Configuration Information Broadcast	LIM_CODE_START_LDBCONFIG	Application side	LIM_CODE_LDBCONFIG
Stop Device Configuration Information Broadcast	LIM_CODE_STOP_LDBCONFIG	Application side	none
Get Device Configuration Information	LIM_CODE_GET_LDBCONFIG	Application side	LIM_CODE_LDBCONFIG
Query Device Firmware Version	LIM_CODE_FIRMWARE_VER_QUERY	Application side	LIM_CODE_FIRMWARE_VER
Device Firmware Version	LIM_CODE_FIRMWARE_VER	ELDS2027B5-2P	none

Function	Message Type Code	Initiator	Response Message
System Restart	LIM_CODE_SYS_REBOOT	Application side	LIM_CODE_SYS_REBOOT_ACK
System Restart Reply	LIM_CODE_SYS_REBOOT_ACK	ELDS2027B5-2P	none
Start/Stop Motor	LIM_CODE_SET _MOTO	Application side	LIM_CODE_S ET_MOTO_ACK
Start/Stop Motor Reply	LIM_CODE_SET_ MOTO_ACK	ELDS2027B5-2P	none
Rain/Fog Filter Switch Status	LIM_CODE_RAINDUST_FLT_SWICTH	ELDS2027B5-2P	none
Query Rain/Fog Filter Switch Status	LIM_CODE_RAINDUST_FLT_SWICTH_STS_QUERY	Application side	LIM_CODE_RAINDUST_FLT_SWICTH
Set Rain/Fog Filter Switch Status	LIM_CODE_RAINDUST_FLT_SWICTH_STS_SET	Application side	LIM_CODE_RAINDUST_FLT_SWICTH
Static Application Switch Status	LIM_CODE_STATIC_APP_SWICTH	ELDS2027B5-2P	none
Query Static Application Switch Status	LIM_CODE_STATIC_APP_SWICTH_STS_QUERY	Application side	LIM_CODE_STATIC_APP_SWICTH
Set Static Application Switch Status	LIM_CODE_STATIC_APP_SWICTH_STS_SET	Application side	LIM_CODE_STATIC_APP_SWICTH
Airspace Filter Switch Status	LIM_CODE_SPATIAL_FLT_SWICTH	ELDS2027B5-2P	none
Query Airspace Filter Switch Status	LIM_CODE_SPATIAL_FLT_SWICTH_STS_QUERY	Application side	LIM_CODE_SPATIAL_FLT_SWICTH
Set Airspace Filter Switch Status	LIM_CODE_SPATIAL_FLT_SWICTH_STS_SET	Application side	LIM_CODE_SPATIAL_FLT_SWICTH
Area Monitoring Switch Status	LIM_CODE_FIELD_MNT_SWICTH	ELDS2027B5-2P	none
Query Area Monitoring Switch Status	LIM_CODE_FIELD_MNT_SWICTH_STS_QUERY	Application side	LIM_CODE_FIELD_MNT_SWICTH
Set Area Monitoring Switch Status	LIM_CODE_FIELD_MNT_SWICTH_STS_SET	Application side	LIM_CODE_FIELD_MNT_SWICTH
Measurement Switch Status	LIM_CODE_MEASURE_SWICTH	ELDS2027B5-2P	none
Query Measurement Switch Status	LIM_CODE_MEASURE_SWICTH_STS_QUERY	Application side	LIM_CODE_MEASURE_SWICTH
Set Measurement Switch Status	LIM_CODE_MEASURE_SWICTH_STS_SET	Application side	LIM_CODE_MEASURE_SWICTH
Dense Fog Obstruction Detection Switch Status	LIM_CODE_FOGCHK_SWICTH	ELDS2027B5-2P	none
Query Dense Fog Obstruction Detection Switch Status	LIM_CODE_FOGCHK_SWICTH_STS_QUERY	Application side	LIM_CODE_FOGCHK_SWICTH
Set Dense Fog Obstruction Detection Switch Status	LIM_CODE_FOGCHK_SWICTH_STS_SET	Application side	LIM_CODE_FOGCHK_SWICTH

4.3 Network Configuration and Device Detection

4.3.1 Factory Configuration of the Network

- IP: 192.168.1.2AB
- MAC: 00:00:YY:DD:SS:AB;
- Mask:255.255.255.0;
- Gate: 192.168.1.1;
- DNS: 192.168.1.1;
- TCP port: 2112;

The IP, MAC, Mask, Gate, and DNS can be modified using FILPS.

4.3.2 Broadcast of Device Configuration Information

After starting up, the ELDS2027B5-2P will automatically broadcast its configuration information to the following multicast address and UDP port:

237.1.1.200:2111

The type code for the device configuration information broadcast message is: LIM_CODE_LDBCONFIG

Application systems can listen for the device configuration information broadcast message on this address and port to obtain the configuration information of the online ELDS2027B5-2P and establish a TCP connection with it. After establishing a TCP connection, a "Stop Device Configuration Information Broadcast" message (type code LIM_CODE_LDBCONFIG_STOP) can be sent to the ELDS2027B5-2P, at which point the ELDS2027B5-2P will stop broadcasting configuration information. Alternatively, a "Start Device Configuration Information Broadcast" message (type code LIM_CODE_LDBCONFIG_START) can be sent to the ELDS2027B5-2P, at which point the ELDS2027B5-2P will restart broadcasting configuration information.

Related Reading	For details on configuration information broadcast messages, please refer to Section 9, "Device Configuration Messages," of the "LiDAR Application Development SDK User Manual."

Software operation	FILPS automatically listens for online ELDS2027B5-2P devices and lists all online Freescale LiDAR devices in the "Online Devices" window. After establishing a TCP connection with the ELDS2027B5-2P by double-clicking the device entry, you can modify the Ethernet configuration in the "Device Configuration" tab.

4.4 User Manual and Application Development for Regional Monitoring Functions

The ELDS2027B5-2P has a built-in area monitoring function, which can independently perform some common area monitoring applications, such as AGV obstacle avoidance, intrusion detection, and target monitoring. Properly using the ELDS2027B5-2P's built-in area monitoring function can effectively reduce system complexity and system construction costs. This section explains the relevant concepts, working principles, usage methods, and application development of the area monitoring function.

4.4.1 Working Principle

The basic approach to area monitoring is "area group + monitoring mode": a monitoring mode is bound to an area group, forming a "monitoring area group"; once the monitoring area group is "activated," it begins to work, processes the scene measurement data, generates different "monitoring signals," and outputs them through TCP packets and I/O output ports; multiple activated monitoring area groups can work simultaneously; and the final output monitoring signals can also be subject to forced control. See Figure 4.6 for the working principle of area monitoring function.

Software operation	The FILPS software can be used to configure the area monitoring function of the ELDS2027B5-2P. For instructions, please refer to Chapter 8, "Area Monitoring Configuration," of the "Lidar Diagnostic and Configuration Software (FILPS) User Manual."

Related Reading	In the factory settings, the area monitoring function is enabled.

Related Reading	For detailed information on TCP packets for the area monitoring function, please refer to Section 6, "Area Monitoring Packets," of the "LiDAR Application Development SDK User Manual."

Figure 4.6 Working principle of regional monitoring function

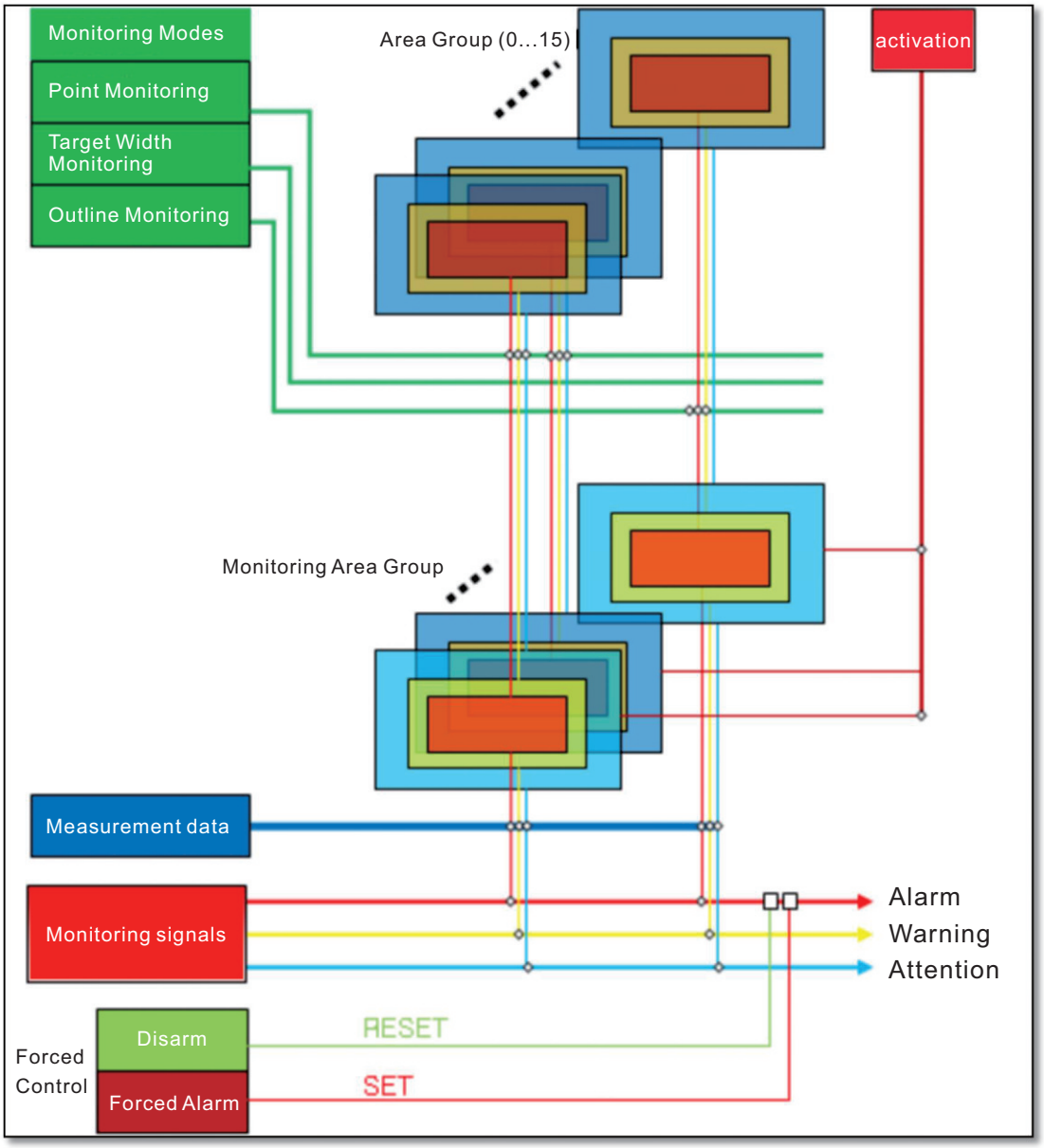

4.4.2 Regional Groups and Monitoring Regional Groups

Explain

The ELDS2027B5-2P's area monitoring function operates based on area groups. Each area group includes three areas: the "Attention Zone," the "Warning Zone," and the “Alarm Zone." These zones generate "Attention," "Warning," and "Alarm" monitoring signals, which are output via TCP packets and I/O output terminals. Typically, the "Attention Zone" contains the "Warning Zone," and the "Warning Zone" contains the "Alarm Zone," as shown in Figure 4.7, "Area Groups.”

In the area groups shown in "Figure 4.7 Area Groups", the rectangular area group and the fan-shaped area group are area groups with built-in shapes in the system. Users can use FILPS software to adjust their shape parameters and perform edge fine-tuning to obtain the desired area group. The custom area group is a polygonal area group that users manually draw using the custom area group function of FILPS software. Edge fine-tuning can also be performed after drawing.

Related Reading

For instructions on editing and drawing region groups, please refer to Section 8.5, "Region Group Shape Editing," of the "LiDAR Diagnostic and Configuration Software (FILPS) User Manual.”

The ELDS2027B5-2P has four built-in preset area groups with different shapes, sizes, and positions, as shown in "Table 4.2 Preset Area Groups" and "Table 4.3 Basic Parameters of Preset Area Groups". In actual use, you can select from these four area groups as needed and edit them using FILPS' area group shape editing function, or you can create the required area groups yourself.

Figure 4.7 Regional Groups

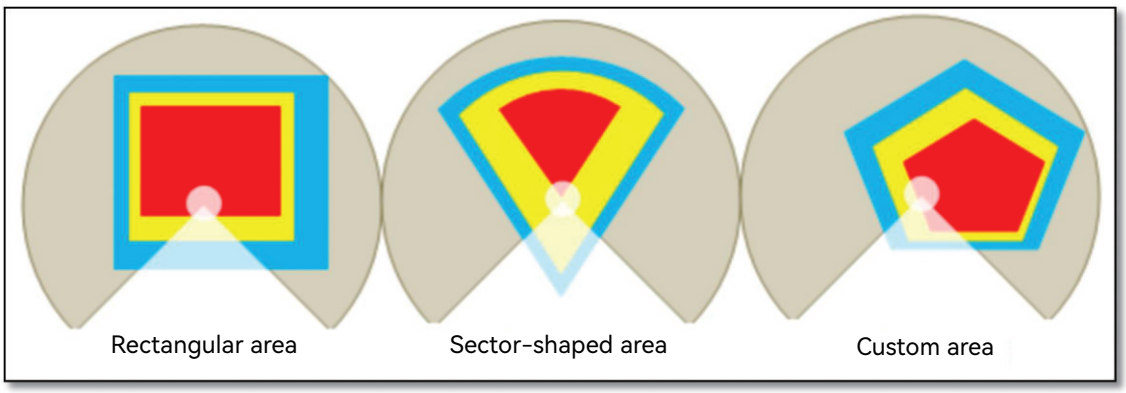

Explain

After binding a monitoring mode to each area group, a monitoring area group is formed, which can be activated and put into operation. The ELDS2027B5-2P can have up to 16 monitoring area groups working concurrently.

Software operation

The FILPS software can be used to configure the area monitoring function of the ELDS2027B5-2P. For instructions, please refer to Chapter 8, "Area Monitoring Configuration," of the "Lidar Diagnostic and Configuration Software (FILPS) User Manual."

Table 4.2 Preset Area Groups

Region Group Number	Shape	Alarm Zone Shape Parameters		
		Center Position	Alarm Zone Length/Width/Radius	Angle Range
1	Rectangle	(0, 50)	100cm×100cm	
2	Sector		100cm	[0°, 180°]
3	Circle		100cm	
4	Polygon	Pentagon		

Table 4.3 Basic Parameters of Preset Region Groups

Parameter Name		Setting Value	Description
Shielding zone radius		20cm	Minimum radius of the near-field shielding zone; targets smaller than this distance will not generate monitoring signals.
Warning zone Buffer distance	Rectangle (0#)	50cm (top) / 0cm (bottom) / 20cm (left) / 20cm (right)	The buffer distance between the edge of the warning zone and the edge of the alarm zone.
	Sector (1#)	50cm	
	Circle (3#)	50cm	
Attention zone Buffer distance	Rectangle (0#)	100cm (top) / 0cm (bottom) / 40cm (left) / 40cm (right)	Note the buffer distance between the edge of the warning zone and the edge of the alarm zone.
	Sector (1#)	100cm	
	Circle (3#)	100cm	

Key Points

If a certain area is not needed to function within a group of areas, you can use the FILPS software to set that area to an "invalid" state. Areas in an "invalid" state will not generate corresponding area monitoring signals. For instructions on how to set this up, please refer to Chapter 8, "Area Monitoring Configuration," of the "LiDAR Diagnostic and Configuration Software (FILPS) User Manual."

4.4.3 Monitoring Area Group Selection Mode

There are two modes for selecting and activating monitoring area groups for the ELDS2027B5-2P:

I/O Input: Use IN1~IN4 to select and activate one of the 16 monitoring area groups. For instructions, please refer to "4.5.1 I/O Input Terminal Function Definition";

FILPS: Use the FILPS software to select and activate one or more of the 16 monitoring area groups. For instructions, please refer to Section 8.6 "Area Monitoring Function Operation Configuration" of the "LiDAR Diagnostic and Configuration Software (FILPS) User Manual".

Key Points	In the factory settings, the monitoring area group selection mode for the ELDS2027B5-2P's area monitoring function is "I/O Input".
Software operation	The FILPS software can be used to set the monitoring area group selection mode of the ELDS2027B5-2P. For instructions, please refer to Section 8.6 "Regional Monitoring Function Operation Configuration" of the "Lidar Diagnostic and Configuration Software (FILPS) User Manual".

4.4.4 Background self-learning and region group background clipping

In practical applications of the area monitoring function, it is necessary to edit and draw area groups of specific shapes according to the usage scenario to prevent fixed background targets entering the monitoring area from triggering monitoring signals. This task constitutes the largest part of the area monitoring function configuration workload and also has a significant impact on the effectiveness of area monitoring.

The ELDS2027B5-2P's area monitoring function has "background self-learning" and "area group background clipping" functions. Using these two functions can significantly reduce the workload of drawing area groups and improve the system's configuration efficiency.

Explain

- Background Self-Learning: The system measures the current scene for a period of time and generates a stable, referable background outline based on the accumulated measurement data. The generated background can be deleted.
- Region Group Background Cropping: Activated monitoring region groups can enable the "Region Group Background Cropping" function, using the background outline to crop the edited region group shape, generating the final usable region group, as shown in "Figure 4.8 Background Self-Learning and Region Group Background Cropping".
- After "Background Self-Learning" is completed, all activated monitoring region groups can enable the "Background Cropping" function.

Figure 4.8 Background self-learning and region group background cropping

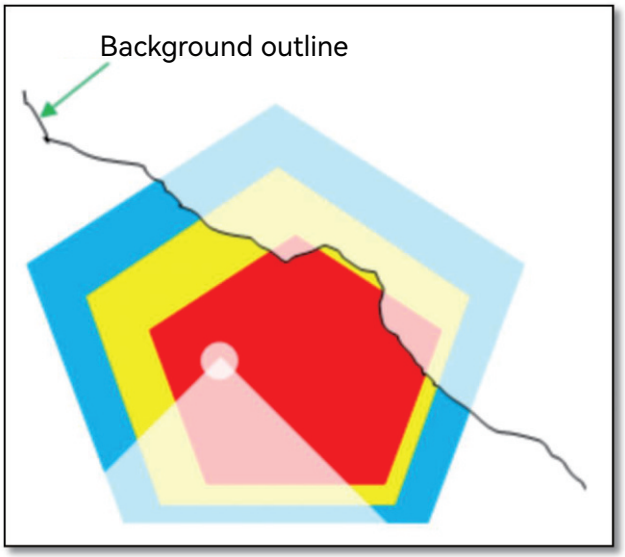

Key Points

When the monitoring area group selection mode is set to "I/O Input", the "Background Clipping" function of the activated monitoring area group is automatically enabled. Please refer to "4.5.1 I/O Input Terminal Function Definition".

Related Reading

For instructions on using the "Background Self-Learning", "Delete Background", and "Background Cropping" functions, please refer to Section 8.7 "Background Self-Learning" and Section 8.6 "Regional Monitoring Function Operation Configuration" of the "LiDAR Diagnostic and Configuration Software (FILPS) User Manual".

4.4.5 Monitoring Modes

The ELDS2027B5-2P has three built-in monitoring modes, the functions, operating conditions, output monitoring signals and parameters of which are shown in "Table 4.4 Monitoring Modes and Parameters".

Table 4.4 Monitoring Modes and Parameters

Monitoring Mode	Function Description	Monitoring Signal	Parameter Description		
			Parameter	Unit	Default Value
Point monitoring	The system counts the number of target points entering the area. If the number of target points exceeds a set threshold and the duration exceeds a set response time threshold, a monitoring signal is output.	Attention Warning Alert	Number of points	Piece	6
			Duration	Scan cycle	0
Target width monitoring	If a target enters the area and its width exceeds a set width threshold, and its presence lasts for a period exceeding a set response threshold, a monitoring signal is output.	Attention Warning Alert	Target width	cm	6
			Existence time	Scan cycle	0
Outline monitoring	The system detects the integrity and stability of the background contour lines learned through self-learning within the monitoring area. If the background contour lines change by more than a set distance threshold, the total length of the change exceeds a set length threshold, and the duration exceeds a set response threshold, an alarm signal is output.	Alarm	Distance variation	cm	20
			Length variation	cm	6
			Duration	Scan cycle	0

Key Points

In the factory settings of ELDS2027B5-2P, the default monitoring mode for each area group is "target width monitoring".

Software operation

For instructions on selecting monitoring modes and adjusting parameters, please refer to Section 8.6, "Regional Monitoring Function Operation Configuration," of the "LiDAR Diagnostic and Configuration Software (FILPS) User Manual."

4.4.6 Self-learning and elimination of normal targets

If the monitoring mode of a certain monitoring area group is "target width monitoring", the "normal target self-learning" function of the area monitoring function can be enabled to exclude normal targets of a specific shape that appear at a specific location in the "attention" monitoring area, thus avoiding unnecessary monitoring and control actions.

Software operation

- "Normal Target Self-Learning": This function measures the current scene for a period of time, detecting normal targets of specific locations and shapes entering the monitoring area. Based on the accumulated normal target contour measurement data, a normal target contour database is generated, as shown in "Figure 4.9 Normal Target Self-Learning".
- "Normal Target Exclusion": After "Normal Target Self-Learning" is completed, whenever an intruding target is detected in the monitoring area, its location and contour are compared with the normal target database. If a normal target is found, no monitoring signal is generated.
- All activated monitoring area groups can enable the "Normal Target Self-Learning" and "Normal Target Exclusion" functions.

Figure 4.9 Self-learning of normal targets

Normal Targets

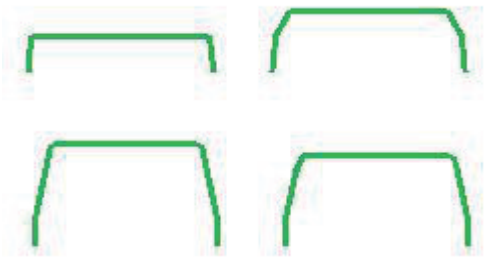

Normal Target Contour Database

4.4.7 Mandatory Control

If the monitoring area group selection mode is set to "FILPS", the area monitoring function can be controlled via the ELDS2027B5-2P's I/O input terminals. Control methods include:

- **Forced Cancellation:** Disables the generation and output of monitoring signals for certain areas. The I/O terminal is IN1, active high. In this state, certain monitoring signals of the area monitoring function are shielded and not output externally. When IN1 goes low, the generation and output of these monitoring signals are restored. This can be used to shield monitoring signal output during security situations using external identification devices (such as RFID readers).
- **Forced Activation:** Forces the generation and output of monitoring signals for certain areas. The I/O terminal is IN2, active high. In this state, these monitoring signals of the area monitoring function are forcibly generated and active. When IN2 goes low, the generation and output of these monitoring signals are restored to normal. This can be used to connect emergency alarm buttons or to implement monitoring cascading.

Related Reading

For information on I/O port TCP messages related to mandatory control, please refer to "4.5 I/O Interface Usage Instructions and Application Development".

Key Points

- In the factory default settings, all area monitoring signals are subject to forced control;
- Forced activation has higher priority than forced deactivation;
- The monitoring signals in areas controlled by "forced deactivation" and "forced activation" can be configured separately using the FILPS software. For configuration instructions, please refer to Chapter 10, "Advanced Configuration," of the "LiDAR Diagnostic and Configuration Software (FILPS) User Manual."

4.4.8 Monitoring signal output

When the activated monitoring area group is working online, the generated monitoring signals are output not only through TCP packets but also through the output terminals of the I/O interface for direct control of external control devices (such as audible and visual alarms, braking mechanisms, etc.). Compared with the TCP packet output method, it has stronger real-time performance.

The TCP packets of monitoring signals and the signal definitions when output through the output terminals of the I/O terminals are shown in "Table 4.5 Monitoring Signal Network Packets". In the TCP packet, the status (0/1) of the monitoring signal is given in bits 0-5 of Data[1]. Whenever the status of a certain monitoring signal changes, including when the status of the monitoring signal changes due to the activation or deactivation of forced control, the ELDS2027B5-2P will actively send a monitoring signal TCP packet to the application system.

Table 4.5 Monitoring Signal Network Messages

Monitoring Area	Monitoring Signals	Network Messages			I/O Output Terminals
		Message Code	Region Group Number	Status [2]	
Alarm Zone	Alarm	LIM_CODE_FMSIG	Data[0] [1]	Data[1]:bit0 Data[1]:bit1 [3]	OUT2A/2B
Warning Zone	Warning	LIM_CODE_FMSIG	Data[0] [1]	Data[1]:bit2 Data[1]:bit3 [3]	OUT3
Attention Zone	Attention	LIM_CODE_FMSIG	Data[0] [1]	Data[1]:bit4 Data[1]:bit5 [3]	OUT4

1: Area group numbering starts from 0;
2: "0" indicates an invalid signal, "1" indicates a valid signal;
3: The overall status of the corresponding monitoring signals for all activated monitoring area groups ("OR" of all statuses).

Related Reading

For the definition of monitoring signals output via I/O output terminals, please refer to "4.5.2 I/O Output Terminal Function Definition".

The status of IN1/IN2 of the I/O interface can be read through TCP packets to determine whether the change in the monitoring signal status is due to forced control. In addition, the application system can send a LIM_CODE_FMSIG_QUERY message to the ELDS2027B5-2P at any time to query the status of the monitoring signal. The ELDS2027B5-2P responds with a LIM_CODE_FMSIG message as defined in "Table 4.5 Monitoring Signal Network Messages".

Related Reading

For details on TCP packets used to read I/O interface status, please refer to "4.5 I/O Interface Usage Instructions and Application Development". For details on TCP packets used to monitor signals, please refer to Section 6, "Area Monitoring Packets," of the "LiDAR Application Development SDK User Manual".

4.4.9 Meteorological conditions for outdoor applications

The ELDS2027B5-2P's area monitoring function can operate effectively in outdoor environments. However, the output characteristics of the area monitoring function will be affected to some extent when outdoor weather conditions are severe. These weather conditions mainly include rainfall and fog/haze, as quantified in "Table 4.6 Rainfall Definition" and "Table 4.7 Fog/Haze Visibility Definition". In actual use, the ELDS2027B5-2P's area monitoring function should be configured appropriately according to the application's requirements for weather conditions.

Table 4.6 Definition of Rainfall Amount

Rainfall intensity	Typical reference value for hourly rainfallk
Light rain	0.4mm/h
Moderate rain	2.0mm/h
Heavy rain	4.0mm/h
Torrential rain	10.0mm/h
Extremely heavy rain	50.0mm/h

The ELDS2027B5-2P area monitoring function can operate stably with an hourly rainfall reference limit of 20 mm/h. If the rainfall exceeds this value, the probability of false alarms will increase significantly under specific area monitoring configurations.

Key Points

- Under conditions of heavy rainfall, dense, close-range raindrops in the air can effectively reflect the measurement laser pulses of the ELDS2027B5-2P, generating valid measurement data. This data is generally distributed within a range of 4 meters.
- Under certain area monitoring configurations, raindrop measurement data can trigger area monitoring signals, causing false alarms.
- To eliminate these false alarms, parameters such as the "number of points," "target width," "existence time," and "duration" of the area monitoring configuration can be adjusted. However, this will affect the ELDS2027B5-2P's ability to detect small targets and delay the output of the monitoring signal.

Table 4.7 Definition of visibility in fog/haze

Fog/Haze Level	Visibility[1] Typical Reference Value
Light haze	10Km
Light haze	5Km
Moderate haze/fog	3Km
Heavy haze	1Km
Dense fog	100m

1. Visibility refers to the maximum horizontal distance at which a person with normal vision can see and identify objects against the sky background under the given weather conditions.

The lower limit of visibility for the ELDS2027B5-2P area monitoring function to operate stably under fog/haze conditions is 2 km. Visibility below this value may result in missed alarms, and false alarms may occur under conditions of dense fog, heavy haze, and specific area monitoring configurations.

Key Points

- Under fog/haze conditions, airborne particles scatter the ELDS2027B5-2P's measurement laser pulses and target reflected light, reducing light energy and decreasing the ELDS2027B5-2P's ability to measure distant targets. This can lead to missed detections under specific area monitoring configurations.
- Under heavy haze or dense fog conditions, airborne particles effectively reflect the ELDS2027B5-2P's measurement laser pulses, generating valid measurement data. This data is generally distributed within a 2-4 meter range and is of an unstable circular or elliptical shape.
- Under specific area monitoring configurations, heavy haze or dense fog measurement data can trigger area monitoring signals, causing false alarms.
- If the ELDS2027B5-2P's "Dense Fog Detection" function is enabled, heavy haze or dense fog will also trigger a "Dense Fog Obstruction" device self-test signal. For details, please refer to "4.6.1 Device Self-Test Items" and "4.9 Device Control and Function Switches".

4.5 I/O Interface Usage Instructions and Application Development

4.5.1 I/O Input Terminal Function Definitions

If the monitoring area group selection mode is set to "FILPS", the preset functions of the I/O input terminals are defined as forced cancellation and forced activation control of area monitoring signals, as well as power saving and life extension control. If the monitoring area group selection mode is set to "I/O Input", the preset functions of the I/O input terminals are defined as the selection and activation of monitoring area groups, as shown in "Table 4.8 Input Terminal Preset Function Definitions".

Table 4.8 Input Terminal Preset Function Definitions

FILPS monitoring area group selection mode					
Functions	IN1	IN2	IN3	IN4	Signal Requirements
Force Cancel	High level				Immediately effective
Force Activate		High level			Immediately effective
Motor Stop			Stop: High level		Lasts for 5 seconds
			Start: Low level		Lasts for 2 seconds
Measurement Stop				Stop: High level	Lasts for 5 seconds
				Start: Low level	Lasts for 2 seconds

"I/O Input" Monitoring Area Group Selection Mode						
Functions	Area Group Number	IN1	IN2	IN3	IN4	Signal Requirements
Select and Activate Monitoring Area Groups	1#	Low level	Low level	Low level	Low level	Duration 1 second
	2#	High level	Low level	Low level	Low level	
	3#	Low level	High level	Low level	Low level	
	4#	High level	High level	Low level	Low level	
	5#	Low level	Low level	High level	Low level	
	6#	High level	Low level	High level	Low level	
	7#	Low level	High level	High level	Low level	
	8#	High level	High level	High level	Low level	
	9#	Low level	Low level	Low level	High level	
	10#	High level	Low level	Low level	High level	
	11#	Low level	High level	Low level	High level	
	12#	High level	High level	Low level	High level	
	13#	Low level	Low level	High level	High level	
	14#	High level	Low level	High level	High level	
	15#	Low level	High level	High level	High level	
	16#	High level	High level	High level	High level	

Key Points

If the monitoring area group selection mode is "I/O Input", but the area group selected by the I/O input terminal is not defined, then all output monitoring signals will be "valid".

4.5.2 Function Definition of I/O Output Terminals

The preset functions of the I/O output terminals are defined as device ready signal and area monitoring signal output, as shown in "Table 4.9 Preset Function Definitions for Output Terminals".

Table 4.9 Preset Function Definitions for Output Terminals

	OUT1	OUT2A/2B	OUT3	OUT4
Signal	Equipment Ready	Alarm	Warning	Attention
Valid Output Status (Default Setting)	On (High Level)[1]	On (High Level)	On (High Level)	On (High Level)
Valid output state retention time[2] (Default setting)	None	2 seconds	2 seconds	2 seconds

1. The valid output state of the device ready signal is fixed at ON (high level) and cannot be changed;

2. Meaning: the minimum duration of the output state of the OUT port when the signal becomes valid. During this period, even if the signal becomes invalid, the output state of the OUT port remains unchanged.

Key Points

- Once the device is ready, the status of the I/O terminals can be read via TCP packets, or the output status of the OUT port can be controlled.
- The effective output status and hold time of the area monitoring signal on the OUT port can be set separately using the FILPS software. For setting instructions, please refer to Chapter 10, "Advanced Configuration," of the "FILPS LiDAR Diagnostic and Configuration Software User Manual."
- If power saving and life extension control via the IN port is not required, or if the device ready signal or area monitoring signal is not required to be output via the OUT port, the association between the IN port and the motor start/stop/start/stop measurement function can be canceled using the FILPS software, or the association between the device ready and area monitoring signals and the corresponding OUT ports can be canceled. For setting instructions, please refer to Chapter 10, "Advanced Configuration," of the "FILPS LiDAR Diagnostic and Configuration Software User Manual."

4.5.3 I/O Interface Network Messages

I/O terminals can be read and set via TCP messages. The message type codes are as follows:

- Read I/O terminal status: LIM_CODE_IOREAD
- Set I/O terminal status: LIM_CODE_IOSET (output terminals only)

After receiving the above messages, the ELDS2027B5-2P will complete the reading or setting of the I/O terminals and reply with an acknowledgment message. The message type code is LIM_CODE_IOSTATUS.

The TCP packets used by the I/O interface are shown in "Table 4.10 I/O Interface Network Packets".

Table 4.10 I/O Interface Network Messages

Functions	Network Message			Initiator	Response Message
	Type Code	Data[0]	Data[1]		
Read	LIM_CODE_IOREAD	0	0	Application side	LIM_CODE_IOSTATUS
Settings	LIM_CODE_IOSET	0/1[1]	0: OUT1[1] 1: OUT2[1] 2: OUT3[1] 3: OUT4[1]	Application side	LIM_CODE_IOSTATUS
Cancel Settings	LIM_CODE_IOSET_RELEASE	0	0	Application side	LIM_CODE_IOSTATUS
I/O Status	LIM_CODE_IOSTATUS	bit0: OUT1[1] bit1: OUT2[1] bit2: OUT3[1] bit3: OUT4[1] bit4: IN1[2] bit5: IN2[2] bit6: IN3[2] bit7: IN4[2]	0	ELDS2027B5-2P	none

1: "0" indicates off, "1" indicates on (high level);
2: "0" indicates low level, "1" indicates high level.

Key Points

When the area monitoring function is enabled, setting the output status of an output terminal using the LIM_CODE_IOSET message takes precedence over the area monitoring signal, and the area monitoring signal output is subsequently muted. To restore the area monitoring signal output, a "Reset I/O Terminal Status" message with the code LIM_CODE_IOSET_RELEASE needs to be sent to the ELDS2027B5-2P. The ELDS2027B5-2P's response message code is LIM_CODE_IOSTATUS.

When the ELDS2027B5-2P receives the LIM_CODE_IOSET_RELEASE message and restores the area monitoring signal output, if the status of the I/O output terminal changes, the ELDS2027B5-2P will also send a LIM_CODE_FMSIG message to the application system.

Related Reading

For details on I/O interface TCP messages, please read Section 7, "I/O Messages," of the "LiDAR Application Development SDK User Manual."

4.6 Equipment self-test and equipment readiness signals

4.6.1 Equipment self-inspection items

As a sensor designed for security applications, the ELDS2027B5-2P can perform self-checks on its operating status, detecting internal and external factors that may affect normal measurement and area monitoring functions. It outputs alarm signals via TCP packets with the code LIM_CODE_ALARM, where Data[0] represents the alarm code. When the alarm status returns to normal, the ELDS2027B5-2P sends a corresponding alarm cancellation signal to the application, with the TCP packet code LIM_CODE_DISALARM.

The self-check items include:

- Internal Error: Equipment malfunction caused by mechanical or electrical failure;
- High/Low Temperature: The internal temperature of the ELDS2027B5-2P is too high or too low, causing the ELDS2027B5-2P to be unable to complete normal measurements or guarantee the effective measurement range;
- Motor Stop: The application system sends a motor stop command to the ELDS2027B5-2P for reasons such as power saving or life extension, causing the ELDS2027B5-2P to enter stop mode and suspending motor rotation;
- Measurement Failure: Incorrect measurement data cannot be generated, possibly due to photoelectric device failure or an overly open surrounding environment;
- Measurement Stop: The application system sends a stop measurement command to the ELDS2027B5-2P for reasons such as power saving or lifespan extension, causing the ELDS2027B5-2P to enter power saving mode, suspending laser emission and distance measurement;
- Obstruction: The ELDS2027B5-2P is obstructed at close range, causing the ELDS2027B5-2P to be unable to complete normal measurements;
- Obstruction by Dense Fog: The ELDS2027B5-2P... Dense fog, impenetrable to lasers, can obstruct measurements, resulting in strong reflected echoes that produce erroneous data, typically unstable, irregular circles or elliptical arcs with a radius of 2-4 meters.
- Monitoring area obstruction: Some activated monitoring areas of the ELDS2027B5-2P may be obstructed, causing the area monitoring function to malfunction and posing a risk of missed alarms.
- Dirty light-transmitting cover: Insufficient cleanliness of the ELDS2027B5-2P's light-transmitting cover can prevent the ELDS2027B5-2P from completing normal measurements or compromising its effective measurement range.

Table 4.11 Equipment Self-Inspection Items

Self-test items	Alarm codes	Instructions for use
Internal error	LIM_DATA_ALARMCODE_INTERNAL	
Overheating	LIM_DATA_ALARMCODE_High_Temperature	Triggered when internal temperature exceeds 65℃
Underheating	LIM_DATA_ALARMCODE_Low_Temperature	Triggered when internal temperature falls below 10℃
Motor stoppage	LIM_DATA_ALARMCODE_M oto_Stopped	
Measurement failure	LIM_DATA_ALARMCODE_Measurement_Failure	False alarms may occur in open environments
Measurement stopped	LIM_DATA_ALARMCODE_Measurement_Stopped	
Obstructed	LIM_DATA_ALARMCODE_Occluded	
Obstructed by dense fog	LIM_DATA_ALARMCODE_Fog_Occluding	False alarms may occur when used in confined indoor spaces; it should be activated outdoors*.
Monitoring area obstructed	LIM_DATA_ALARMCODE_MNT_Field_Occluded	
Dirty light-transmitting cover	LIM_DATA_ALARMCODE_OCDirty	

*: For instructions on enabling and disabling fog obstruction detection, please refer to Chapter 10, "Advanced Configuration," of the "LiDAR Diagnostic and Configuration Software (FILPS) User Manual."

4.6.2 Equipment Ready Signal

The device readiness signal is associated with the device self-test items, reflecting the basic working status of the ELDS2027B5-2P and providing a convenient way for application systems to monitor the operation of the ELDS2027B5-2P. When the status of the device self-test items changes, the ELDS2027B5-2P will update the status of the device readiness signal according to the device configuration. When the status of the device readiness signal changes, it will output to the application system through TCP packets and I/O output ports. The TCP packet code for the device readiness signal is LIM_CODE_DEVICE_STATUS. Data[0]:bit0 in the packet represents the device readiness status, and Data[0]:bit1~bit10 represents the current status of each device self-test item defined bit by bit.

The generation logic for the device ready signal is as follows: the device ready signal is valid when all device self-test items associated with it are invalid; the device ready signal is invalid when one or more device self-test items associated with it are valid. The "Internal Error" and "Motor Stop" states are associated with the device ready signal by default; when these two self-test states are valid, the device ready signal is invalid.

The device self-test items associated with the device ready signal can be configured through the FILPS software. The I/O output port corresponding to the device ready signal is OUT1. When the device ready signal is valid, the output state of OUT1 is ON (high level). Whether to output the device ready signal through OUT1 can also be configured through the FILPS software. In actual use, the correct association content and I/O configuration should be selected according to application requirements.

Key Points

For instructions on setting up the device readiness signal, please refer to Chapter 10, "Advanced Configuration," of the "LiDAR Diagnostic and Configuration Software (FILPS) User Manual."

4.7 Intrinsically Safe Configuration

4.7.1 Area Monitoring Signal Correlation

When using the ELDS2027B5-2P's area monitoring function in security protection and prevention applications with high security requirements, it is necessary to fully consider the security risks brought about by various abnormal factors, and ensure that the system can automatically enter the security protection mode when these abnormal situations occur, so as to avoid security incidents. The ELDS2027B5-2P's area monitoring function and device readiness signals are designed to ensure the inherent safety of the system, including the following two aspects:

- The validity status of the I/O output port of the area monitoring signal can be set: it can be set to either "on" or "off".
- Area monitoring signals are associated with device ready signals: each area monitoring signal can be associated with a device ready signal. When the device ready signal becomes "invalid", the associated area monitoring signal automatically becomes "valid".

Key Points

The following are some important usage recommendations related to intrinsic safety:

- Application systems should correctly configure the association between device readiness signals and device self-test items according to the requirements of the actual usage environment to ensure that device readiness signals can reflect the ELDS2027B5-2P's operating status in a timely and comprehensive manner.
- For device readiness signals output by the ELDS2027B5-2P via TCP packets and I/O output ports, application systems should design necessary processing mechanisms, such as alarms via indicator lights or buzzers, to ensure that any abnormalities in the ELDS2027B5-2P's operating status can be detected promptly and appropriate responses can be taken.
- The effective state of the I/O output ports for area monitoring signals should generally be set to "off" to ensure that in the event of abnormalities such as poor contact or cable breakage, the electrical state of the area monitoring signals actually received by the system is consistent with the effective state.
- Area monitoring signals and device readiness signals should be associated as needed to ensure that once a device readiness signal becomes invalid, the relevant area monitoring signal automatically becomes valid, causing the system to automatically enter a safety protection mode, awaiting maintenance and repair.

For the intrinsically safe configuration method of area monitoring signals, please refer to Chapter 6 "Device Configuration" and Chapter 10 "Advanced Configuration" of the "LiDAR Diagnostic and Configuration Software (FILPS) User Manual".

4.7.2 I/O output port settings for automatic timeout release

When integrating the ELDS2027B5-2P into security protection and prevention applications with high security requirements, if the application system controls the ELDS2027B5-2P's I/O output ports via LIM messages and uses them as intrinsically safe alarm control signals, it's crucial to fully consider the security risks posed by various abnormal factors. This ensures that the system can automatically enter a security protection mode in the event of such anomalies, preventing security incidents.

The most typical example of such anomalies is a network cable interruption when the system is in a safe state, causing the ELDS2027B5-2P's I/O output ports to remain in a safe output state, losing their alarm output capability. To address this security risk, the ELDS2027B5-2P's I/O output ports are designed with an automatic timeout release function, ensuring that the ELDS2027B5-2P's I/O output ports automatically enter a security protection mode when the application system loses control of the ELDS2027B5-2P.

Important Note

- The following are instructions for using the I/O output port timeout auto-release function:
- The signal state of the I/O output port used as an alarm control signal should be intrinsically safe, meaning "on/high" indicates a safe state and "off/low" indicates an alarm state.
- Enable the ELDS2027B5-2P's "I/O output port timeout auto-release function" and set the auto-release timeout, typically 2-5 seconds.
- In the safe state, the application system should periodically use LIM messages to set the output port state to "on/high," with the period not exceeding the auto-release timeout.
- If a timeout is set, the ELDS2027B5-2P will automatically set the output port state to "off/low," and the system will enter safety protection mode.
- When the application system uses LIM messages to set the output port state to "off/low" in the alarm state, the I/O output port timeout auto-release function will not work.

For instructions on configuring the automatic release function for I/O output ports after timeout, please refer to Chapter 10, "Advanced Configuration," of the "LiDAR Diagnostic and Configuration Software (FILPS) User Manual."

4.8 Energy Saving and Life Extension Control

For applications such as automotive systems that rely on batteries and require energy conservation, the ELDS2027B5-2P features energy-saving control and can enter energy-saving mode. The basic energy-saving method is to stop measurement; the ELDS2027B5-2P's laser emission and reception will cease, reducing overall power consumption by approximately 35%. It can then quickly return to normal operating mode, avoiding any delays to the application. There are two methods to stop measurement:

- TCP Message: Sends a measurement control switch setting message (message code LIM_CODE_MEASURE_SWICTH_STS_SET) to the ELDS2027B5-2P and sets Data[0] to 0;
- I/O Input Port: Sets the I/O input port IN4 of the ELDS2027B5-2P to high level and maintains it for 5 seconds;

There are two methods to restore normal measurement:

- TCP Message: Sends a measurement control switch setting message (message code LIM_CODE_MEASURE_SWICTH_STS_SET) to the ELDS2027B5-2P and sets Data[0] to 1;
- I/O Input Port: Sets the I/O input port IN4 of the ELDS2027B5-2P to low level and maintains it for 2 seconds.

A further power-saving method is to stop the motor. The scanning motor inside the ELDS2027B5-2P will stop rotating, further reducing the overall power consumption by about 10%. It takes about 5 seconds to return to normal operating mode. There are two ways to stop the motor:

- TCP message: Send a motor control message (message code LIM_CODE_SET_MOTO) to the ELDS2027B5-2P and set Data[0] to 0;
- I/O input port: Set the I/O input port IN3 of the ELDS2027B5-2P to a high level and maintain it for 5 seconds;

There are two ways to restart the motor:

- TCP message: Send a motor control message (message code LIM_CODE_SET_MOTO) to the ELDS2027B5-2P and set Data[0] to 1;
- I/O input port: Set the I/O input port IN3 of the ELDS2027B5-2P to a low level and maintain it for 2 seconds.

Both stopping measurement and stopping the motor have the effect of extending the lifespan of the ELDS2027B5-2P. The lifespan of the ELDS2027B5-2P is mainly determined by the lifespan of its internal scanning motor. Stopping the motor reduces internal wear during the ELDS2027B5-2P's idle time, directly extending the overall lifespan of the ELDS2027B5-2P. At the same time, stopping measurement reduces the number of times the internal optoelectronic devices of the ELDS2027B5-2P transmit and receive data during the ELDS2027B5-2P's idle time, lowering the temperature of the optoelectronic devices and also contributing to extending the overall lifespan of the ELDS2027B5-2P.

Key Points

- After measurement stops, the ELDS2027B5-2P will generate a "Measurement Stop" alarm, and its front panel ERR indicator will remain constantly lit. If the device ready signal is associated with the "Measurement Stop" self-test, the device ready signal will also become invalid.
- After the motor stops, the ELDS2027B5-2P will generate a "Motor Stop" alarm, and its front panel ERR indicator will remain constantly lit. The device ready signal is associated with the "Motor Stop" self-test state by default, and the device ready signal becomes invalid.
- Power saving and life extension control of the ELDS2027B5-2P can only be performed using I/O input ports IN3/IN4 when the ELDS2027B5-2P's area group selection mode is set to "FILPS".
- The delay time for the ELDS2027B5-2P to exit the measurement stop state and resume normal measurement is 20ms (excluding the low-level hold time of In4).
- The delay time for exiting the motor stop state and resuming normal measurement is 5s (excluding the low-level hold time of In3).
- Whether to use IN3/IN4 The power-saving and life-extending control port is a configurable option. For related configuration methods, please refer to Chapter 10, "Advanced Configuration," of the "LiDAR Diagnostic and Configuration Software (FILPS) User Manual."

4.9 Equipment Control and Function Switches

The ELDS2027B5-2P has a set of built-in device control and data processing functions. The data processing functions can be selectively turned on or off according to application needs. Control options can be made effective in real time through the operation control function of the FILPS software, or continuously effective through the device configuration function of the FILPS software. Real-time control can also be achieved by sending TCP packets to the ELDS2027B5-2P.

These device control functions include:

- **Device Reboot:** Reboots the ELDS2027B5-2P. The corresponding TCP packet code is LIM_CODE_SYS_REBOOT.
- **Motor Stop/Start:** Stops or starts the ELDS2027B5-2P's internal scanning motor, causing the ELDS2027B5-2P to enter or exit power-saving and life-extending modes. For details, please refer to "4.8 Power Saving and Life-Extending Control". The corresponding TCP packet code is LIM_CODE_SET_MOTO.
- **Measurement Stop/Start:** Stops or starts measurement, causing the ELDS2027B5-2P to enter or exit power-saving and life-extending modes. For details, please refer to "4.8 Power Saving and Life-Extending Control". The corresponding TCP packet code is LIM_CODE_MEASURE_SWICTH_STS_SET.

Data processing functions include:

- **Rain, Fog, and Smoke Penetration:** Whether to enable the rain, fog, and smoke penetration function, which filters short-range measurement data generated by rain, fog, and smoke to detect distant targets as much as possible. For details on this function, please refer to "4.1.3 Rain, Fog, and Smoke Penetration," and the corresponding TCP packet code is LIM_CODE_RAINDUST_FLT_SWICTH_SET;

- **Static Application:** The ELDS2027B5-2P's measurement data output has two modes: static application mode and mobile application mode. In static application mode, the raw measurement data is filtered using a time-domain filter before output. This results in smaller statistical errors in the measurement data of stationary targets while ensuring the real-time performance of moving target measurements. In mobile application mode, the raw measurement data is output directly to ensure the real-time performance of the entire scene's measurement data. The corresponding TCP packet code is LIM_CODE_STATIC_APP_SWICTH_SET.

- **Spatial Filtering:** The ELDS2027B5-2P has a built-in spatial filtering function to filter unreliable measurement results, such as "pseudo-edge points" (see "4.1.4 Pseudo-edge points"), reducing noise in the measurement data. The corresponding TCP packet code is LIM_CODE_SPATIAL_FLT_SWICTH_SET.

- **Regional Monitoring Function:** Whether the regional monitoring function is enabled or not, the corresponding TCP packet... The TCP packet code is LIM_CODE_FIELD_MNT_SWICTH_SET;

- **Dense Fog Detection Function:** Whether to detect the possibility of dense fog obstructing the scene and generate a "Dense Fog Obstruction" device alarm. The corresponding TCP packet code is LIM_CODE_FOGCHK_SWICTH_SET.

Key Points

- In the factory default settings, the ELDS2027B5-2P's application mode is "Mobile Application Mode".
- When using FILPS's real-time control function or controlling the function switches via TCP packets, the control is only effective for the current ELDS2027B5-2P operating cycle. After the ELDS2027B5-2P restarts, the initial state of the function switches is determined by the device configuration.
- To ensure continuous control of the ELDS2027B5-2P's function switches, the "Device Configuration" and "Advanced Configuration" functions of the FILPS software should be used to modify the function switch configuration accordingly and then uploaded to the ELDS2027B5-2P.

Key Points

- For instructions on using the FILPS software to control and configure the ELDS2027B5-2P, please refer to Chapter 6 "Device Configuration," Chapter 9 "Operating Status Monitoring," and Chapter 10 "Advanced Configuration" of the "LiDAR Diagnostic and Configuration Software (FILPS) User Manual."
- For TCP messages used for controlling the ELDS2027B5-2P and its function switching, please refer to Section 10 "Device Control and Function Switching Messages" of the "LiDAR Application Development SDK User Manual."

5. Equipment Installation

Notice

The ELDS2027B5-2P's casing has a sealed label at the seams. If this label is damaged or the casing is opened, Freescale will no longer be responsible for the product's warranty. The ELDS2027B5-2P's casing may only be disassembled by Freescale-approved personnel.

5.1 Installation Preparation

5.1.1 Basic Installation Requirements

The ELDS2027B5-2P weighs 0.6 kg. The basic requirements for installing the ELDS2027B5-2P are:

- Secure the installation;
- Keep it away from vibration sources or take vibration damping measures;
- Avoid impacts.

For ELDS2027B5-2P units operating outdoors, necessary protective measures should be installed to minimize the risk of contamination, damage, or direct sunlight on the light-transmitting cover. The standard PT11 protective cover for the ELDS2027B5-2P can be installed, or a custom-designed protective cover may be used.

5.1.2 Installation Materials

- DADISICK provides a simple seat bracket (included) and necessary installation equipment;
- Optional: DADISICK provides a simple side mount bracket, or a side/seat hybrid bracket, and necessary installation equipment;
- Optional: DADISICK provides a protective cover, and necessary installation equipment;
- Alternatively, a user-designed mounting bracket with adjustable mounting angle, and two appropriately sized M4 screws.

5.1.3 Installation Location Selection

Notice

- The ELDS2027B5-2P should not be exposed to direct sunlight, as this may cause it to overheat and malfunction.
- The ELDS2027B5-2P should not be subjected to direct impact, as this may cause the light-transmitting cover to be directly abraded or cracked.
- The ELDS2027B5-2P should not be directly exposed to mud, grease, dust, or other contaminants, as this may cause the light-transmitting cover to become covered by opaque materials, leading to measurement failure.

  If any of the above risks exist, an appropriate protective cover should be installed on the ELDS2027B5-2P.

5.1.4 Special Reminder

When installing the ELDS2027B5-2P, please pay special attention to the following:

Notice

- To ensure the ELDS2027B5-2P's 300° scanning range is unobstructed by mounting components;
- If installation conditions prevent ensuring the ELDS2027B5-2P's 300° scanning range is unobstructed by mounting components or surfaces, the effective scanning angle of the ELDS2027B5-2P needs adjustment. For details, please refer to "5.5 Adjusting the Scanning Range";
- The two indicator lights on the ELDS2027B5-2P's front panel should be easily visible;
- The SLR operation buttons on the ELDS2027B5-2P's front panel should be easily operable;
- Sufficient space should be provided on the left side of the ELDS2027B5-2P for easy connection of interface cables;
- Avoid excessive vibration to the ELDS2027B5-2P;

  If installing the ELDS2027B5-2P in an environment with significant vibration, take measures to prevent loosening of the mounting screws;
- Regularly check the tightness of the mounting screws;

  Regularly check the lens cover for dirt.

5.2 Installation height and pitch angle

5.2.1 Relationship between installation height and effective working distance

The ELDS2027B5-2P emits a circular ranging laser spot with the same vertical and horizontal divergence angle of 12.5 mrad. As the detection distance increases, the spot size gradually increases, and its lower edge extends downwards. If it hits the ground or the mounting surface, it cannot detect targets at greater distances. Therefore, there is a certain relationship between the effective working distance of the ELDS2027B5-2P and the installation height, as shown in "Figure 5.1 Relationship between Effective Working Distance and Installation Height".

Taking horizontal ground installation as an example, the relationship between the bottom installation height h of ELDS2027B5-2P and the effective working distance d'_{max} as follows:

$$d'_{max} = 2(h+h_0-r_0) / \alpha$$

Where:

h_0 is the height of the ELDS2027B5-2P's output optical axis relative to the bottom surface, h_0 = 0.076m;

r_0 is the beam exit diameter, r_0 = 0.008m;

α is the beam divergence angle, α = 0.0125.

Figure 5.1 Relationship between effective working distance and installation height

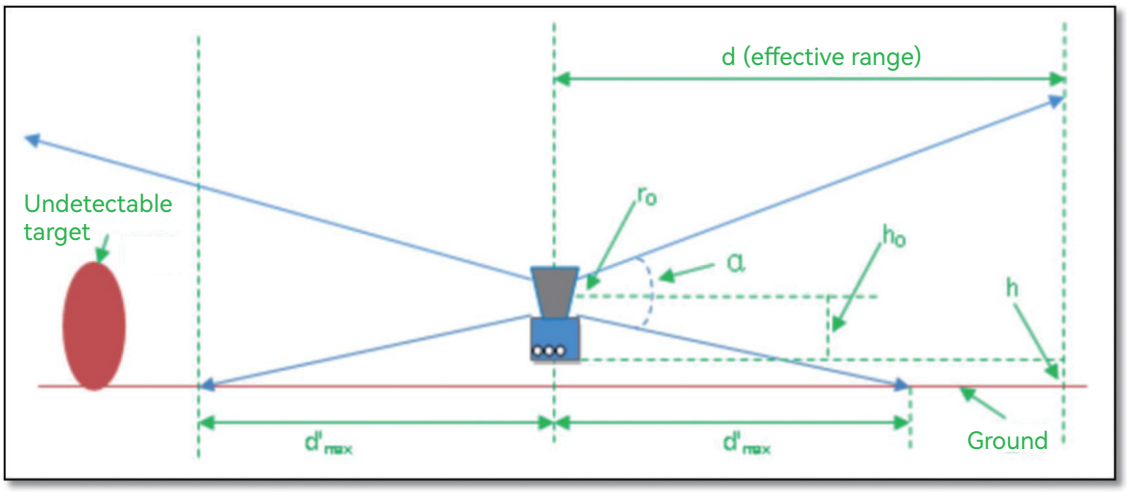

Important Note

The actual installation height of ELDS2027B5-2P should be determined based on the relative height between the ground or reference working surface at the work site and the installation position, as well as the requirements of the working range.

5.2.2 Height and angle adjustment when multiple radars are operating simultaneously

If multiple Freescale lidars are operating simultaneously in the environment, the laser emitted by one lidar should be prevented from directly incident on the light-transmitting cover of another lidar. Otherwise, the measurements of the two lidars may interfere with each other.

Incorrect measurement data may be generated at their respective specific scanning angles. If this is possible, the height or pitch angle of the laser scanning surface of the lidar should be adjusted to avoid mutual interference, as shown in "Figure 5.2 Adjustment of Scanning Surface Height" and "Figure 5.3 Adjustment of Scanning Surface Pitch Angle".

Figure 5.2 Scan plane height adjustment

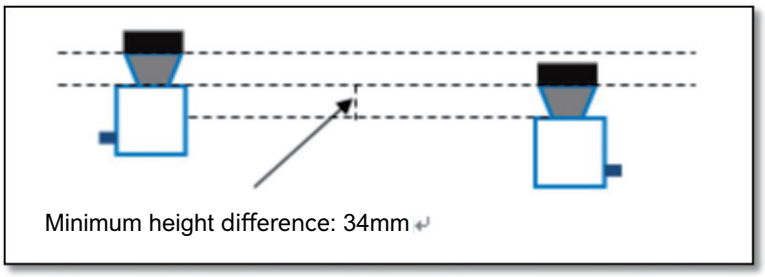

Figure 5.3 Adjustment of scanning plane pitch angle

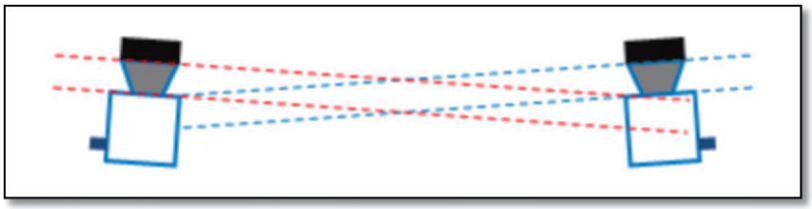

Important Note

If the above installation adjustments fail, try powering off and then powering back on the lidar that is generating erroneous measurements until the erroneous data disappears. Once the erroneous measurements disappear, they should not reappear in a short period of time.

5.3 Using mounting brackets

Figure 5.4 Installation diagram (side mounting)

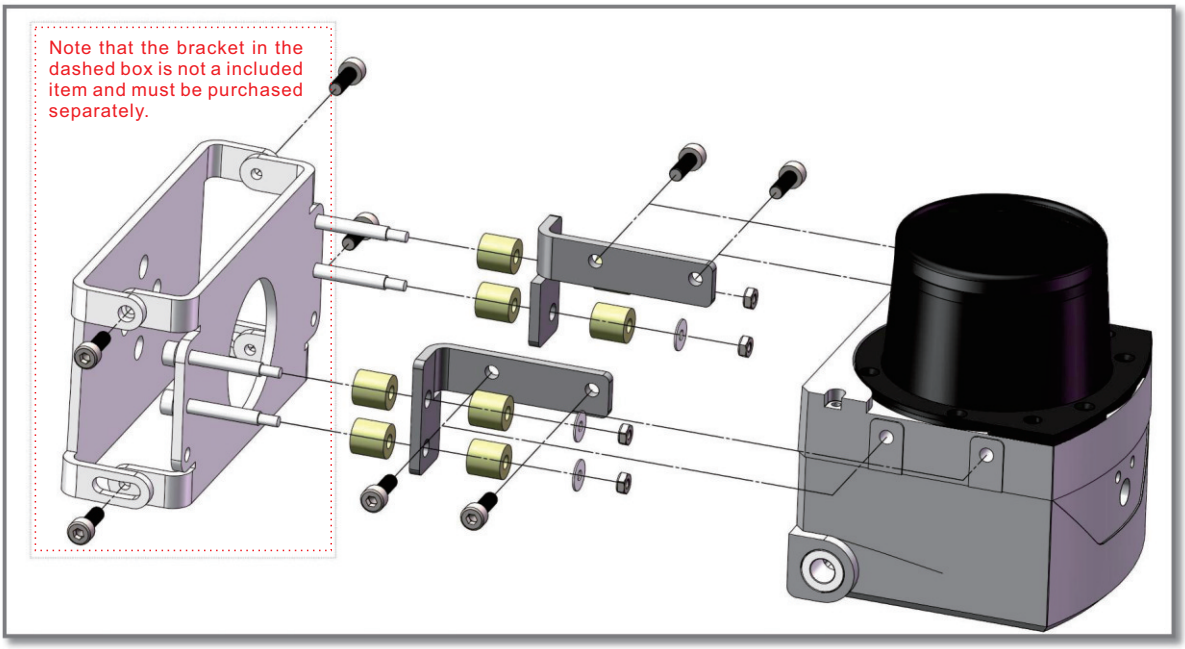

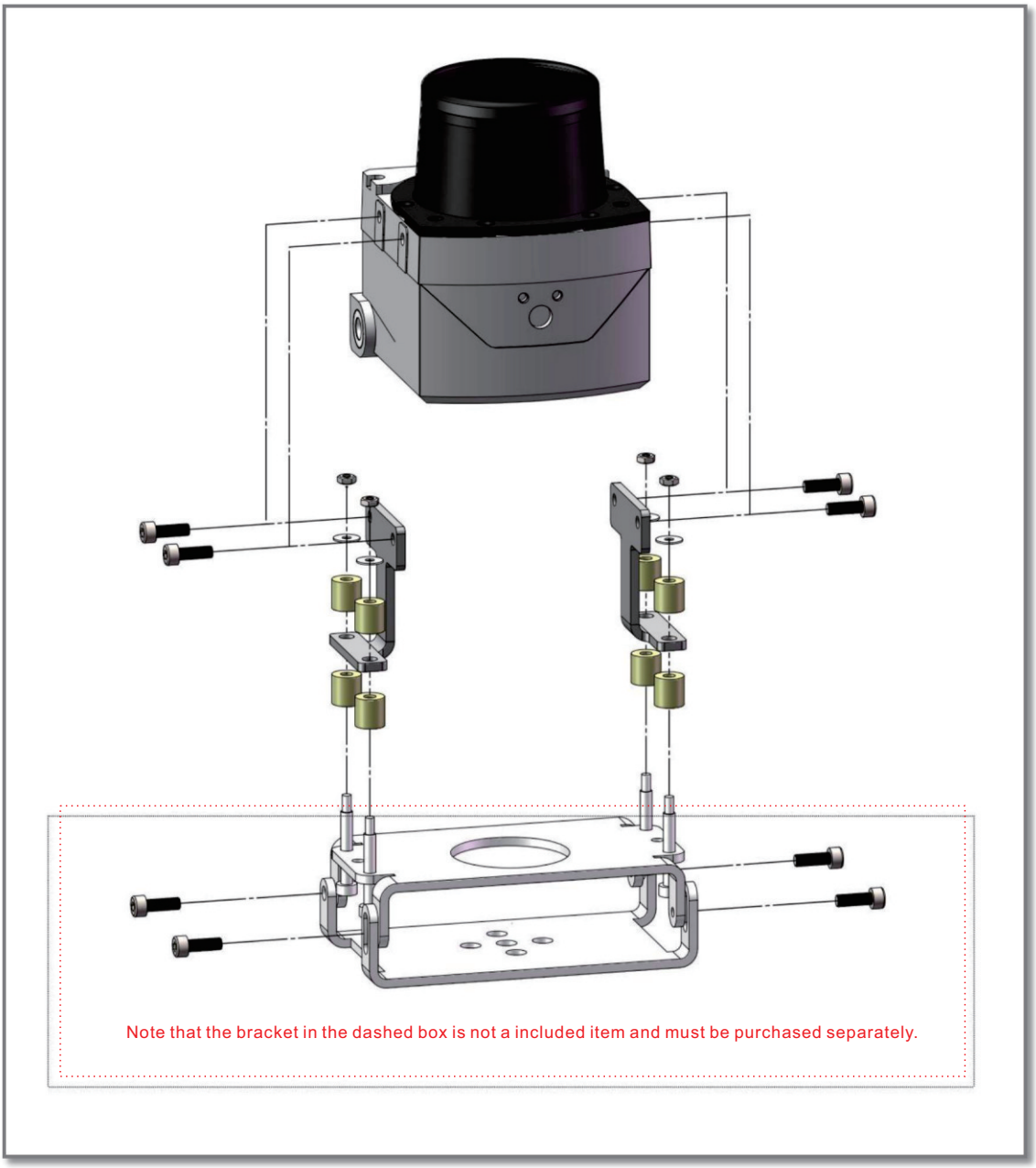
Note that the bracket in the dashed box is not a included item and must be purchased separately.

5.4 Use protective shields

Figure 5.6 Schematic diagram of installation using protective cover

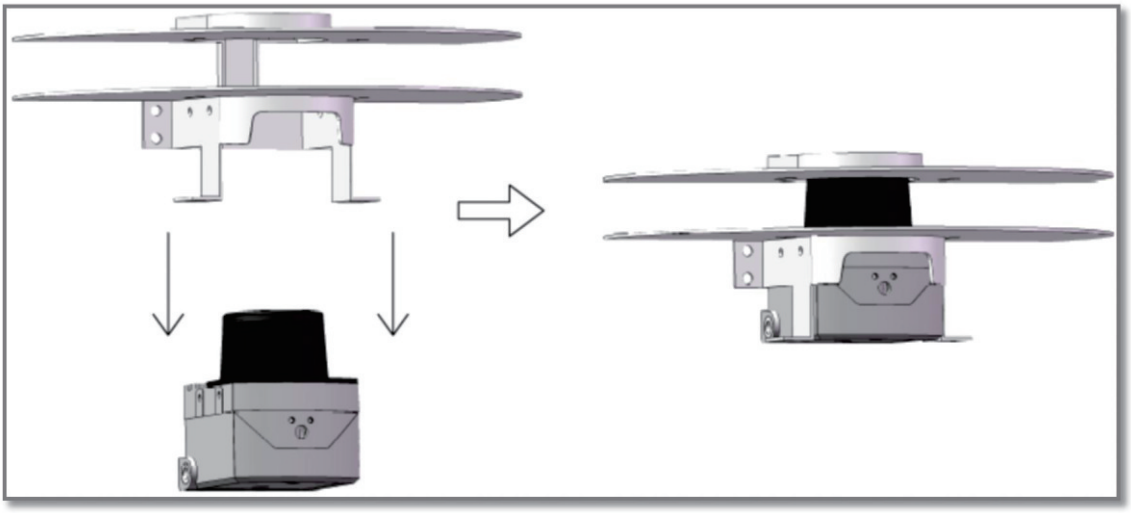

5.5 Adjust the scanning range

In the factory settings, the ELDS2027B5-2P's original working scanning range is 300°, with a scan start angle of -60° and a scan end angle of 240°, as shown in "Figure 10.1 Measurement Coordinate System/Scanning Range/Scale". When installing and using the ELDS2027B5-2P, if an object is present within 5cm of the laser scanning surface height within the original working scanning range—such as a user-designed protective cover structure, or a non-removable object or wall in the installation environment—it will trigger an obstruction alarm and may also trigger the area monitoring function to output an area monitoring signal. To avoid this, the scan start angle and scan end angle need to be adjusted according to the actual effective scanning range of the ELDS2027B5-2P in the working environment, as shown in "Figure 5.7 Effective Scanning Range".

Figure 5.7 Effective scanning range

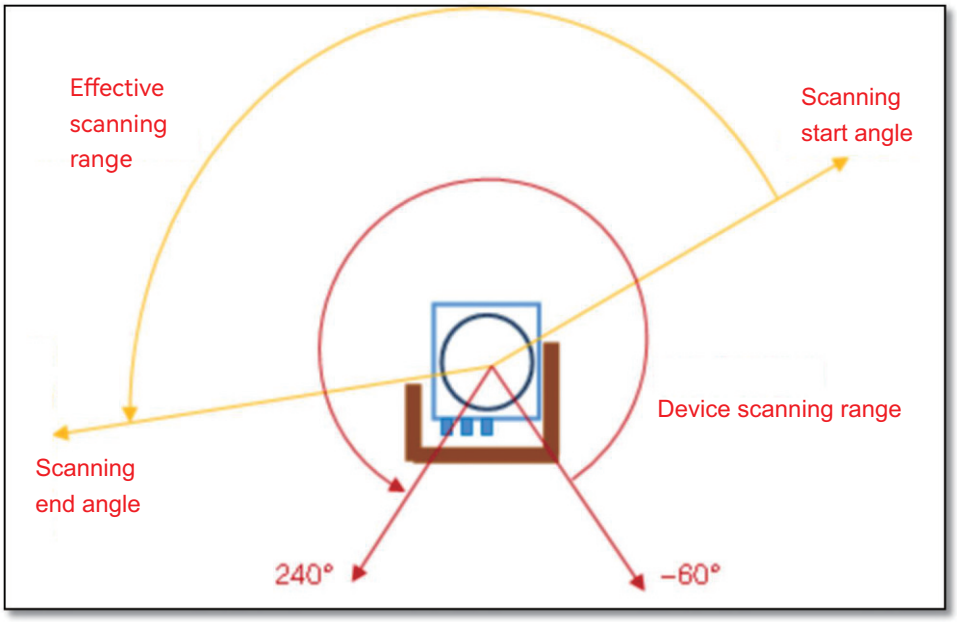

The scan start angle and scan end angle of the ELDS2027B5-2P can be adjusted using the FILPS software, as follows:

- Connect to the ELDS2027B5-2P via Ethernet using FILPS to configure the device. For detailed instructions, please refer to "7.4 Device Configuration".
- Open the "Running Status" tab in the device window. Here you can observe the ELDS2027B5-2P's measurement data from the field. Use the mouse to zoom in on the measured scene depth image to the maximum level, and then use the "Specific Angle Measurement Data" function to check the occlusion angle of obstructions to determine the effective scanning range of the ELDS2027B5-2P, as shown in "Figure 5.8 Determining the Effective Scanning Range Through Measurement Data".
- In the "Running Configuration Parameters" section of the "Device Configuration" tab in the device window, enter the correct start and end angle values in the "Effective Scanning Angle Range" edit box, as shown in "Figure 5.9 Effective Scanning Range Adjustment Software Operation Interface". FILPS will adjust the input values according to the ELDS2027B5-2P's current scanning angle resolution.
- Click the "Upload to Device" button to send the configuration data to the ELDS2027B5-2P. The ELDS2027B5-2P will then automatically restart. After the ELDS2027B5-2P is restarted, the newly set working scan range parameters begin to take effect. At this time, the ELDS2027B5-2P only outputs measurement data within the working scan range, and the area monitoring function also only processes data within the working scan range.

Related Reading

For detailed information related to scanning angle range adjustment, please refer to Section 7.11 "Specific Angle Measurement Data" and Section 6.3 "Running Configuration Parameters" of the "LiDAR Diagnostic and Configuration Software (FILPS) User Manual".

Figure 5.8 Determining the effective scanning range using measurement data

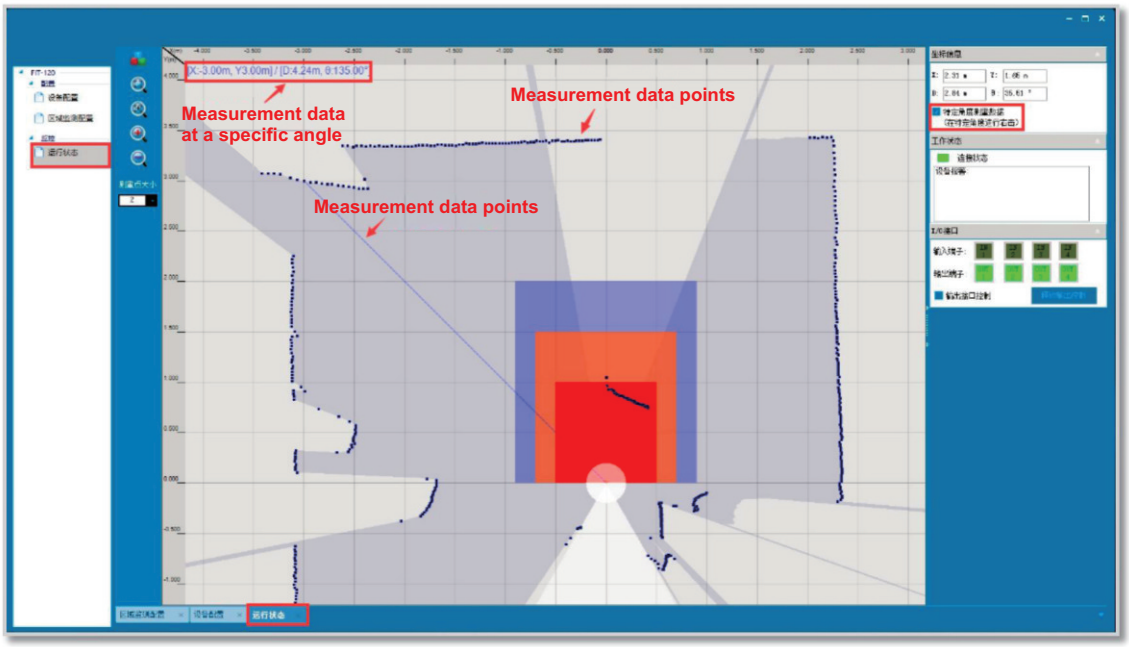

Figure 5.9 Effective scan range adjustment software interface

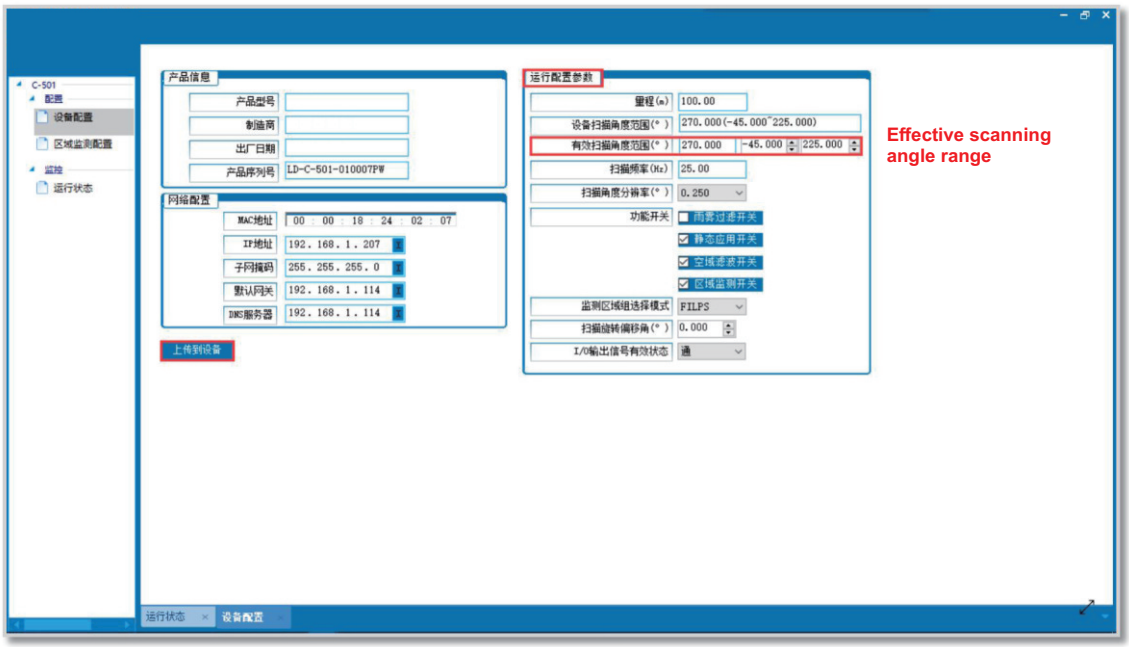

6 Electrical Installation

Notice

When performing electrical installation on the ELDS2027B5-2P, pay special attention to the following:

- Select personnel with electrical installation qualifications to perform the operation;
- Avoid installation while the power is on, as this may damage the equipment.

6.1 Installation Steps

The electrical installation of the ELDS2027B5-2P should follow these basic steps:

- Prepare a suitable power supply for the ELDS2027B5-2P and complete the wiring of the power interface;
- Complete the wiring of the I/O interfaces according to the application requirements;
- Connect to the PC via the Ethernet interface to prepare for configuration of the ELDS2027B5-2P;
- Connect the power interface to prepare for power-on operation.

6.2 Installation Preparation

6.2.1 Power Supply

The ELDS2027B5-2P requires a DC 10V–30V power supply. The ELDS2027B5-2P main unit uses a measuring power supply, with a normal operating power consumption of 3.4W and a maximum power consumption of 3.9W. The ELDS2027B5-2P has a built-in automatic heating module. The heating module automatically starts when the internal temperature is below 28℃ and automatically stops when it exceeds 40℃ . The heating module uses a heating power supply; when heating is activated, the power consumption is 7.6W under a DC 12V supply and 6W under a DC 24V supply. Please provide the power supply according to the above standards during use.

Important Note

Please read "10.1 Datasheet" carefully to understand the complete power supply requirements for ELDS2027B5-2P. Users should follow local regulations to provide necessary protection for the ELDS2027B5-2P power supply cable to avoid short circuits or power overload; in addition, an emergency circuit breaker should be installed on the power supply cable to quickly cut off the power supply in an emergency.

6.2.2 Power requirements and temperature characteristics for automatic heating

To ensure normal operation of the equipment under low-temperature conditions and to prevent excessive temperature drift in measurement results due to large fluctuations in internal temperature caused by ambient temperature, the ELDS2027B5-2P incorporates a heating module. This module automatically activates when the internal temperature drops below 28°C and automatically stops heating when it exceeds 40°C.

When the ambient temperature is low, the equipment dissipates heat rapidly, causing the internal temperature to drop quickly. This results in the heating module periodically activating, with the activation cycle depending on the ambient temperature. Figures 6.1 and 6.2 show the time/temperature curves of the automatic heating module at ambient temperatures of 0°C and -15°C. It can be seen that the heating cycle is approximately 10 minutes at 0°C, while the heating module remains continuously heating at -15°C.

When powering the ELDS2027B5-2P for applications operating in low-temperature environments, the heating cycle factor must be considered.

Notice

As shown in Figure 6.2, under an ambient temperature of -15℃, the internal temperature of the ELDS2027B5-2P cannot reach the set temperature, and the heating module will continue to start.

Figure 6.1 Heating time/temperature curve at an ambient temperature of 0℃

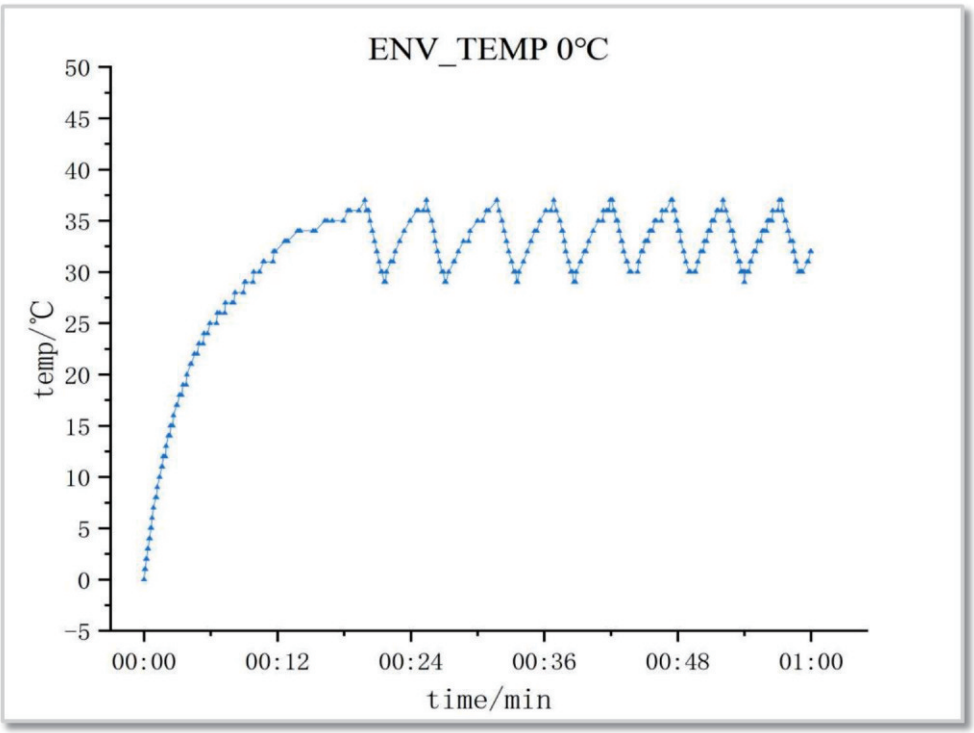

Figure 6.2 Heating time/temperature curve at an ambient temperature of -15℃

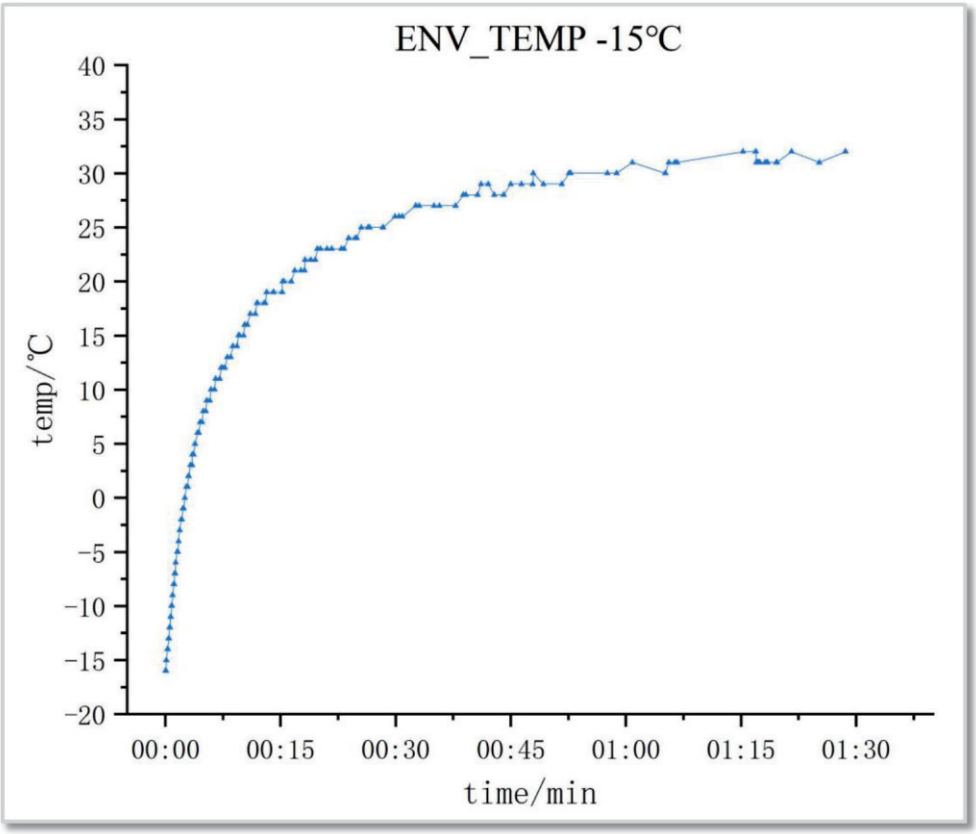

6.2.3 Grounding Requirements

Warning

It is essential to ensure that the ground of the ELDS2027B5-2P mounting surface is at the same potential as the ground of the remote equipment. Otherwise, the current generated by the potential difference in the ground will flow through the ELDS2027B5-2P casing, posing the following potential hazards:

- It generates contact voltage on the ELDS2027B5-2P casing, causing personal injury;
- it causes the ELDS2027B5-2P to malfunction;
- it causes a heating effect on the cable, creating a fire hazard.

6.2.4 Conductor Requirements

Please use copper wires for all wiring. The cross-sectional area requirements for the wires are shown in Table 6.1 Wire Requirements.

Table 6.1 Conductor Requirements

Interface	Conductor Cross-sectional Area Requirements
Power	Power Supply Installation Nearby: Minimum 0.25mm². Power Supply Installation Not Nearby: For DC24V power supplies with a transmission distance of 20 meters, minimum 1mm².
Ethernet	CAT5 Standard Network Cable
I/O cables	Minimum 0.25mm². For a transmission distance of 50 meters, minimum 0.5mm²

6.2.5 Connecting to PC

Please use a standard RJ45 network cable to connect to the Ethernet interface, or properly connect it to the Ethernet signal lead in the interface cable.

6.3 Device Interface Signal Definition

6.3.1 Power Interface Signal Definition

The ELDS2027B5-2P composite interface cable contains a pair of power leads. The signal definitions and wire colors of the leads are shown in "Table 6.2 Power Lead Signal Definitions".

Table 6.2 Power Lead Signal Definitions

Signal Name	Function	Lead Wire Color and Marking
V	Positive power supply terminal	Red
GND	Negative power supply terminal	Black

The composite interface cable comes pre-installed with a DC002 type power interface socket, which can be used directly by the user. The signal definition of the power interface and the wire colors inside the composite interface cable are shown in "Table 6.3 Power Socket Signal Definition".

Table 6.3 Power Socket Signal Definitions

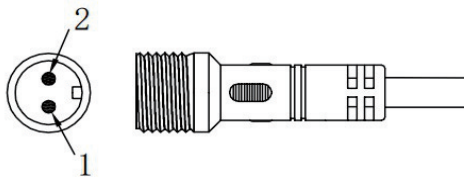

Serial Number	Signal Name	Internal Wire Color of Interface Cable	Function
1	GND	Black	Power supply negative terminal
2	V	Red	Power supply positive terminal

Warning

The power interface wiring must be completed strictly according to the correct lead sequence; otherwise, it may cause permanent damage to the equipment.

6.3.2 Network Interface Signal Definitions

The ELDS2027B5-2P composite interface cable contains four Ethernet interface leads. The signal definitions and wire colors of the leads are shown in "Table 6.4 Network Interface Signal Definitions".

Table 6.4 Network Interface Signal Definitions

Signal Name	Function	Interface Cable Lead Color	Network Cable Lead Color	Network Cable Wiring Sequence
RX+	Data Receive Positive Terminal	Black-Green	White-Green	3
RX-	Data Receive Negative Terminal	Green	Green	6
TX+	Data Transmit Positive Terminal	Black-Red	White-Orange	1
TX-	Data Transmit Negative Terminal	Orange	Orange	2

6.3.3 I/O Interface Signal Definitions

The ELDS2027B5-2P composite interface cable contains 10 I/O interface leads. The signal definitions and wire colors of the leads are shown in "Table 6.5 I/O Interface Signal Definitions".

Table 6.5 I/O Interface Signal Definitions

Signal Name	Function	Lead Wire Color
IN1	General Input 1# Positive Terminal	White
IN2	General Input 2# Positive Terminal	Yellow
IN3	General Input 3# Positive Terminal	Brown
IN4	General Input 4# Positive Terminal	Purple
GND IN	General Input Common Negative Terminal	Blue
OUT1A	General Output 1#	Black and White
OUT2A	General Output 2A#	Black and Yellow
OUT3A	General Output 3#	Black and Brown
OUT4A	General Output 4#	Black and Purple
OUT2B	General Output 2B#	Black and Blue

illustrate:

- The input signals at the general-purpose input positive terminals "IN1...IN4" are level inputs (vs. the general-purpose input common negative terminal "GND IN"), with logic states of "high" and "low".
- The general-purpose output terminals "OUT1...4A, OUT2B" are PNP switch outputs (vs. polarity is "power supply positive terminal"), with logic states of "on" and "off". OUT2A and OUT2B are redundant outputs with fully synchronized physical signals.
- The device power supply negative terminal GND must be used as the power supply negative terminal for the external circuitry of the I/O terminals.

Important Note

For the electrical characteristics of I/O signals, please refer to "10.1 Datasheet".

6.4 Interface cable wiring

The ELDS2027B5-2P has an IP67 enclosure protection rating. When wiring, please note the following:

Notice

- When using the included power cable, ensure the waterproof threaded sleeve between the power cable plug and the ELDS2027B5-2P's DC002 power socket is tightened.
- If using a user-made power cable, ensure the connection between the cable and the ELDS2027B5-2P's DC002 power socket is waterproofed.
- When connecting an RJ45 Ethernet cable to the ELDS2027B5-2P's RJ45 Ethernet socket, use the included DP21@RJ45 waterproof sleeve for waterproofing.
- If not using the ELDS2027B5-2P's RJ45 Ethernet socket or I/O interface leads,waterproofing is required; do not expose them.

The ELDS2027B5-2P package includes a pre-assembled power cable with a DC002 plug, which can usually be used directly. Its wiring definition is shown in "Table 6.6 Power Cable Lead Signal Definition".

Table 6.6 Power Cable Lead Signal Definitions

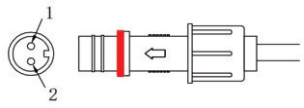

Serial Number	Signal Name	Function	Lead Color
1	GND	Power Supply Negative Terminal	Black
2	V	Power Supply Positive Terminal	Red

Notice

The power interface wiring must be completed strictly according to the correct lead sequence; otherwise, it may cause permanent damage to the equipment.

6.5 External Reference Circuit for I/O Interface

Figure 6.3 External circuit for I/O interface input terminals (refer to GND potential)

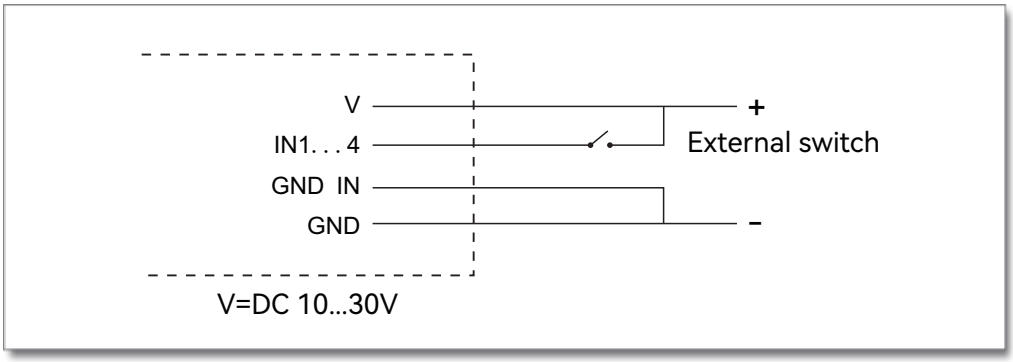

Figure 6.4 External circuit for I/O interface input terminals (floating)

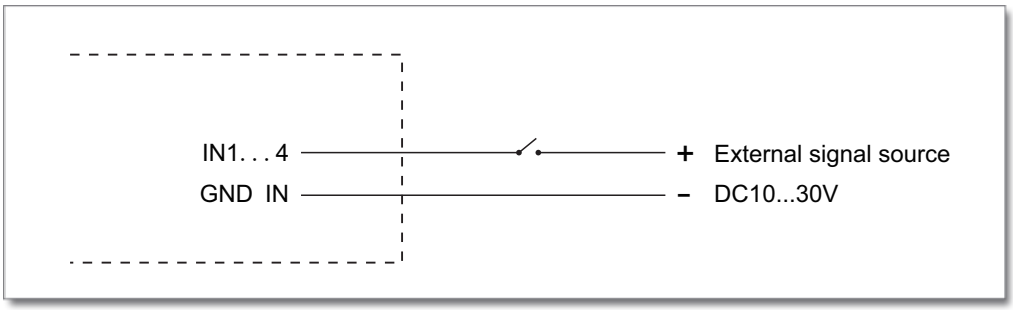

Important Note

When wiring according to the input terminal wiring method shown in the diagram above, the external power supply must be provided in accordance with the external signal power supply voltage range.

Figure 6.5 External Circuit Diagram of I/O Interface Output Terminals (Common Source/PNP)

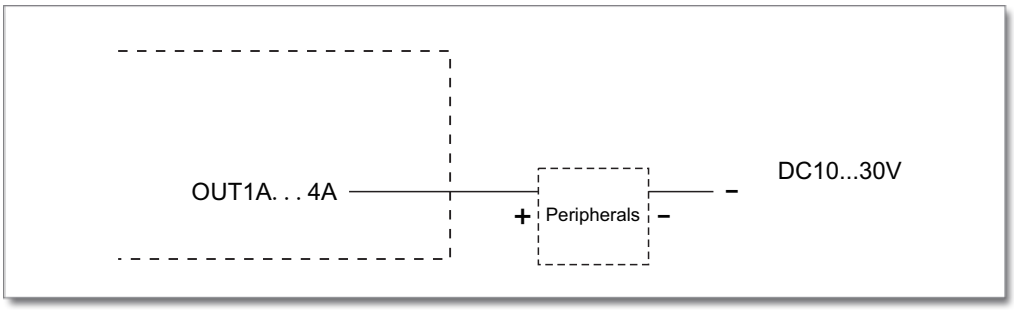

Dual OUT 2-port PNP

PNP Wiring Diagram

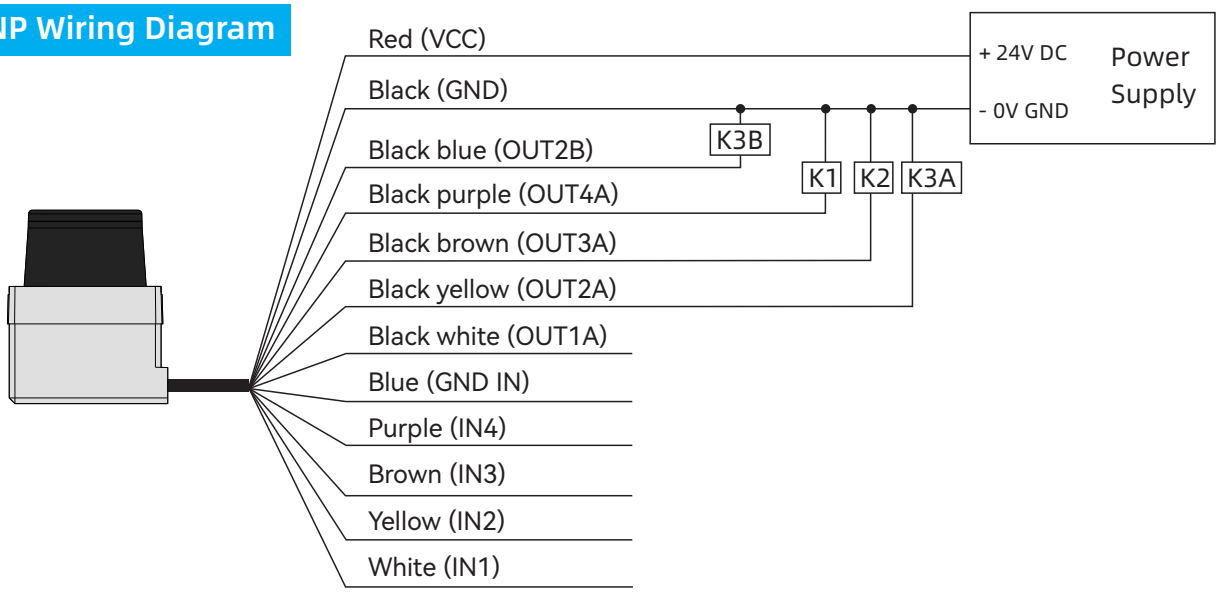

- The input signals at the general-purpose input positive terminals "IN1…IN4" are level inputs (vs. the general-purpose input common negative terminal "GND IN"), with logic states of "high" and "low".
- The general-purpose output terminals "OUT1…4A, OUT2B" are PNP switch outputs (vs. polarity is "power supply positive terminal"), with logic states of "on" and "off". OUT2A and OUT2B are redundant outputs with fully synchronized physical signals.
- The device power supply negative terminal GND must be used as the power supply negative terminal for the external circuitry of the I/O terminals.

7 Equipment configuration and commissioning testing

Warning

Incorrect equipment configuration may cause equipment damage or malfunction. Before configuring the ELDS2027B5-2P, ensure the equipment has been thoroughly checked. Please carefully read "2 Basic Operations and Precautions" and make the necessary preparations.

The configuration and commissioning testing of the ELDS2027B5-2P requires the use of "LiDAR Diagnostic and Configuration Software (FILPS)". FILPS is used to configure the ELDS2027B5-2P's operating parameters according to application requirements, acquire and display measurement data, and test the area monitoring function and I/O interface input/output function.

Related Reading

For detailed instructions on using FILPS, please read the "FILPS User Manual".

7.1 Configuration and Testing Steps

- Install the FILPS software on the PC;
- Establish a TCP connection between the PC and the ELDS2027B5-2P via Ethernet port;
- Adjust and save the device parameters and functional parameters of the ELDS2027B5-2P according to application requirements;
- Perform functional tests on the ELDS2027B5-2P.

7.2 Software and Equipment Preparation

- Download "LiDAR Diagnostic and Configuration Software (FILPS)" from https://ru.dadisick.com/comm48/Download-Center.htm ;
- Install the FILPS software on your PC using the "FILPS Installation Package" from the "LiDAR Diagnostic and Configuration Software (FILPS)" package;
- Power off the ELDS2027B5-2P;
- Connect the PC and ELDS2027B5-2P via Ethernet port using a direct connection;
- On the PC, disable all network adapters except the one connected to the ELDS2027B5-2P. Configure the network adapter connected to the ELDS2027B5-2P with an IP address of "192.168.1.25x / 255.255.255.0", where x can be any number from 1 to 4, as long as it doesn't conflict with the IP addresses of other network adapters;
- Connect external devices such as switches and indicator lights according to the signal definitions of the I/O leads and the external circuit requirements of the I/O interface input/output terminals of the ELDS2027B5-2P, in preparation for testing the area monitoring function and the I/O interface control function.

7.3 Basic Test

In the factory settings, the area monitoring function of the ELDS2027B5-2P is enabled, and the monitoring area group selection mode is set to "I/O Input". Basic tests of the ELDS2027B5-2P's area monitoring function can be performed without using a PC.

HTR indicator light SLR operation button

- Disconnect the IN1...4 inputs of the ELDS2027B5-2P's I/O interface. The activated monitoring area group is now 0#, with its alarm zone being a circular area with a radius of 2 meters.
- Power on the ELDS2027B5-2P. The "HTR" indicator light will turn off, and the device will enter initialization mode. After approximately 27 seconds, it will turn constantly lit, indicating that the device has begun normal measurement.
- Press and hold the SLR operation button on the ELDS2027B5-2P's front panel until the "HTR" indicator light enters rapid flashing mode (2.5Hz). Release the button and move away from the 0# alarm zone. Wait 12 seconds. The ELDS2027B5-2P has completed background self-learning and automatically enabled "background clipping" for the 0# monitoring area group.
- If a target enters the alarm zone of the 0# monitoring area group, the ELDS2027B5-2P will output an "alarm" monitoring signal on the OUT2A of the I/O interface. The output result can be observed by connecting an external indicator light to OUT2A.

7.4 Equipment Configuration

- Power on the ELDS2027B5-2P. The device enters the initialization state. After approximately 27 seconds, the "HTR" indicator light illuminates, indicating that the device has begun normal measurement.
- Run FILPS on the PC.
- In the FILPS interface, locate the ELDS2027B5-2P being configured in the "Online Devices" window, as shown in Figure 7.1 (Online Devices Window). Double-click the ELDS2027B5-2P device icon to add it to the "New Project" window. Double-click the ELDS2027B5-2P device icon again in the project window to establish a TCP connection with the ELDS2027B5-2P. The configured ELDS2027B5-2P device window will then appear, as shown in Figure 7.2 (Device Window and Device Configuration Tab).
- In the ELDS2027B5-2P device window, open the "Device Configuration" tab, as shown in Figure 7.2 (Device Window and Device Configuration Tab). Modify the ELDS2027B5-2P settings according to the application system requirements. Configure the Ethernet and enable the area monitoring function. Press the "Upload to Device" button to send the configuration data to the ELDS2027B5-2P. The ELDS2027B5-2P will then automatically restart.

Figure 7.1 Online Device Window

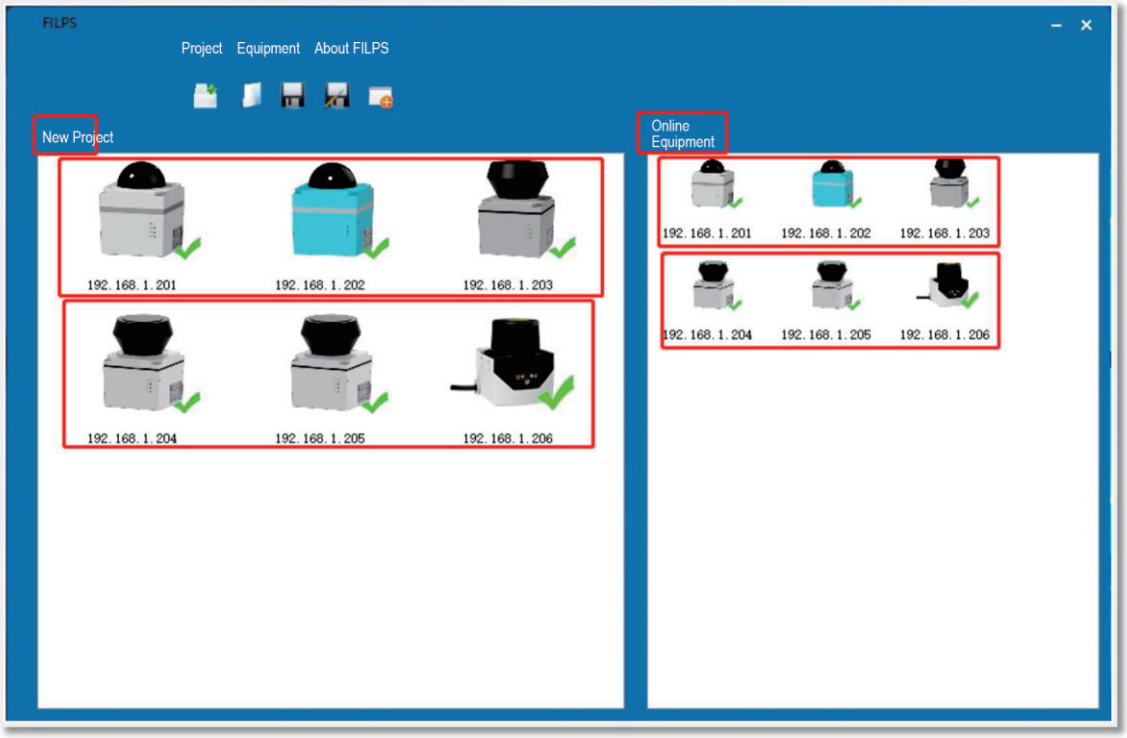

Figure 7.2 Device form and device configuration tab

7.5 Trial Run Test Procedures

After the ELDS2027B5-2P restarts and the "HTR" indicator light turns solid, reconnect the ELDS2027B5-2P using FILPS to begin trial operation testing. The steps are as follows:

- Open the "Operating Status" tab in the device window, as shown in "Figure 7.3 Operating Status Tab". Here you can observe the measurement results of the ELDS2027B5-2P at the application site and the output results of the monitoring signals. Simultaneously, you can observe the output results of the ELDS2027B5-2P's I/O interface through external indicator lights. You can also test the forced control function (disarming/forced alarm) using an external switch.

- Open the "Operating Status" tab. In the "I/O Interface" section, as shown in "Figure 7.4 I/O Interface Status" and "Figure 7.5 Output Terminal Status Control", use external switches and indicator lights to test functions such as I/O reading, I/O output setting, and de-setting I/O outputs.

Important Note

Please read the "Trial Run Test" section of the "ELDS2027B5-2P Concise User Manual" to understand the test preparation and basic test procedures, and design other test methods as needed.

Figure 7.3 Running Status Tab

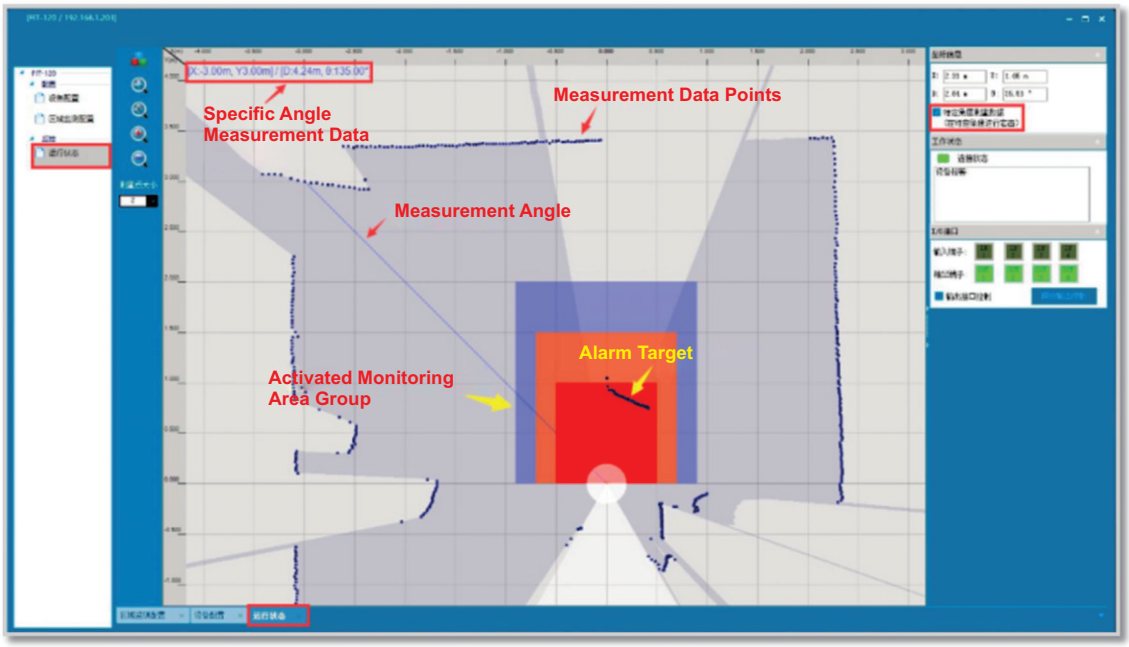

Figure 7.4 I/O Interface Status

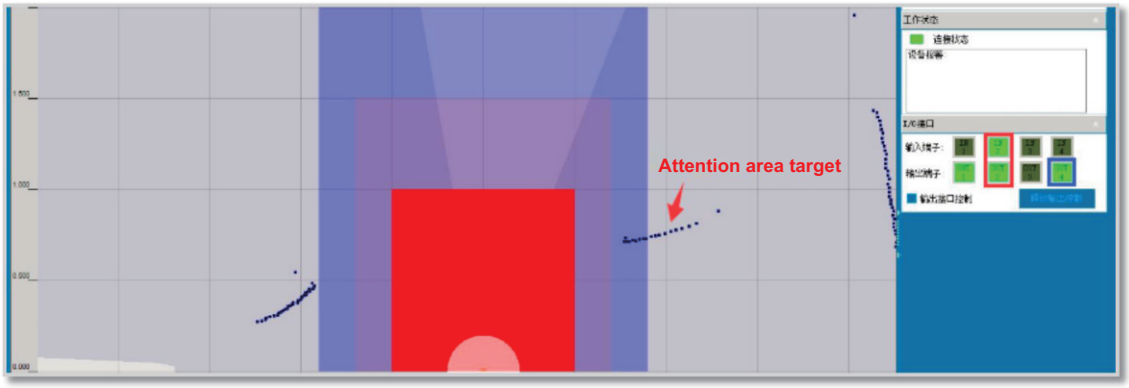

Figure 7.5 Output Terminal Status Control

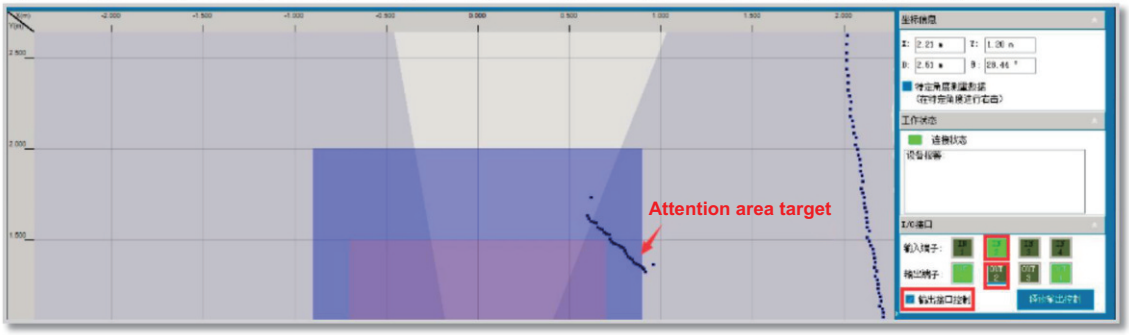

8 Equipment maintenance

Notice

The ELDS2027B5-2P's casing has a sealed label at the seams. If this label is damaged or the casing is opened, DADISICK will no longer be responsible for the product's warranty. The ELDS2027B5-2P's casing may only be disassembled by personnel authorized by DADISICK.

8.1 Operation and Maintenance

The ELDS2027B5-2P requires virtually no maintenance when operating in clean environments. When operating in environments where contamination is possible, the primary maintenance task is cleaning the lens cover. When cleaning the lens cover, please note the following:

- Do not use corrosive cleaning agents or those containing solids;
- Do not use abrasive cleaning materials.

Static electricity on the lens cover can cause dust particles to adhere easily, leading to a decrease in measurement accuracy. In this case, use a lens cloth with anti-static properties to wipe the lens cover.

8.2 Replacement equipment

When replacing a faulty ELDS2027B5-2P, if the original equipment's cables and plugs are undamaged, they do not need to be replaced; only the faulty ELDS2027B5-2P needs to be replaced. The replacement steps are as follows:

- Turn off the power switch of the ELDS2027B5-2P to be replaced;
- Disconnect all connecting cables;
- Install the replacement ELDS2027B5-2P (see “5 Equipment Installation” and “6 Electrical Installation”);
- Connect all cables;
- Turn on the power switch;
- Configure the replaced ELDS2027B5-2P via PC (see “7.4 Equipment Configuration”);

After the replaced ELDS2027B5-2P restarts, the system can be put back into use.

9 Q&A

Notice

The ELDS2027B5-2P's casing has a sealed label at the seams. If this label is damaged or the casing is opened, Freescale will no longer be responsible for the product's warranty. The ELDS2027B5-2P's casing may only be disassembled by Freescale-approved personnel.

1. The "HTR" indicator light remains off:

Power off and then power on the ELDS2027B5-2P repeatedly. If the problem persists after multiple restarts, it needs to be returned to the factory for repair.

2. The "ERR" indicator light remains on or flashes continuously:

Table 9.1 Troubleshooting for “ERR” Indicator Light

Indicator light status	Causes	Solutions
Constant light	Internal error Measurement failure	After a power outage, power on and restart. If the problem persists after multiple power cycles, the device needs to be returned to the factory for repair.
	Measurement stopped	Restart the measurement using FILPS.
Short flicker (1Hz)	Dirty/obstructed light cover	Clean the light-transmitting cover or remove any obstructions.
	Obstructed by dense fog	If it is confirmed that the obstruction is not due to dense fog, use FILPS to disable the "Dense Fog Detection".
Long flicker (0.5Hz)	High/low temperature alarm	High Temperature: Power off and cool the device; install insulation or a protective cover. Low Temperature: Continue operation; if the problem persists for an extended period, an external heating device is required.

3. FILPS cannot detect the configured ELDS2027B5-2P / cannot connect directly to the ELDS2027B5-2P via PC:

Refer to Chapter 10, “Troubleshooting," of the "LiDAR Diagnostic and Configuration Software (FILPS) User Manual.”

10 Technical Specifications

10.1 Datasheet

Table 10.1 Datasheet

Functional parameters	Minimum value	Typical value	Maximum value
Scanning angle range	300°		
Scanning angle	-60°		240°
Scanning angle resolution	0.5°		
Scanning frequency	25Hz		
Target reflectivity	3%		1000% (reflector)
Measurement range	0.1m		20m
18% reflectance range			20m
10% reflectance range			15m
Measurement delay [1]	3.3ms	40ms	76.7ms
Measurement error			
Systematic error		± 2cm	± 6cm
Statistical error (1σ)		± 1cm	± 2cm
Temperature drift			0.4cm/℃
Standards compliant	EN ISO 12100:2010, EN 60204-1:2018, EN ISO 11553-1:2020/A11:2020, EN 60825-1:2014/A11:2021, EN IEC 61000-3-2:2019+A1:2021, EN 61000-3-3:2013+A2:2021, EN IEC 61000-6-1:2019, EN IEC 61000-6-3:2021, EN IEC 61326-1:2021, EN 13849-1:2015 (Cat 4 Pld), EN 13856-1:2013, EN 62061:2015, EN 61496-3:2019 TYPE4		

General parameters	Minimum value	Typical value	Maximum value
Laser Emitter	Pulsed laser diode		
Laser Wavelength	895nm	905nm	915nm
Laser Class	Class I (GB 7247.1-2012, Eye Safety)		
Laser Exit Diameter	8mm		
Laser Divergence Angle	11.6mrad	12.5mrad	12.8mrad
Emitting Beam Axis Distance to Rear Side	45mm		
Scanning Surface Axis Distance to Bottom Surface Height	76mm		
Ambient Light Intensity	0lux		80,000lux
Enclosure Protection Rating	IP67(GB 4208-2008)		
Safety Protection Rating			
Insulation Resistance	1MΩ (GB 16796-2009, 5.4.4)		
Dielectric Strength	0.5KV(GB 16796-2009, 5.4.3)		
EMC Testing			
Electrostatic Discharge	6kV (GB/T17626.2-2006, Level 3)		
Fast Burst Immunity	1kV (GB/T17626.4-2008, Level 2)		
Electromagnetic Radiation Immunity	GB/T17626.3-2006, Level 2		
Surge Immunity	GB/T17626.5-2008 Power Interface: 1.2/50us, 2KV/1KA (Class 3) Ethernet Interface: 10/700us, 1KV/25A (Class 2) I/O Interface: 1.5/50us, 0.5KV/0.25KA (Class 1)		
Impact	GB/T 2423.5		
Single Impact	15g, 11ms		
Continuous Impact	10g, 16ms		
Vibration	GB/T 2423.10		
Frequency Range	10Hz		150Hz
Amplitude	5g		
Temperature	GB/T 2423.1, GB/T 2423.2		
Operating Temperature	-25℃		+50℃
Storage Temperature	-30℃		+70℃
Humidity	93%, +40℃, 2h(GB/T 2423.3)		
Altitude			5000m
Enclosure			
Material	Aluminum (GD-AlSi12 3.2582.05)		
Color	White (PANTONE 11-0601TCX)		
Light Transmitter Mask			
Material	PC		
Surface Coating	Abrasion-resistant coating		
Dimensions			
Length	80mm		
Width	85mm		
Height	102mm		
Interface Cable Length	1 m		
Weight	0.6Kg		

Electrical Parameters	Minimum Value	Typical Value	Maximum Value
Measurement Power Supply			
Type	DC power supply		
Supply Voltage	10V	24V	30V
Starting Current [5]			0.12A
Operating Current [5]			0.14A
Power Consumption	3.4W	3.4W	3.9W
Heating Power Supply			
Type	DC power supply		
Supply Voltage	10V	24V	30V
Starting Current [5]			0.12A
Operating Current [5]			0.25A
Power Consumption	7.6W	6W	6W
Electrical Interface	Minimum value	Typical value	Maximum value
Power Interface	DC002 type round socket, Female, 2-pin		
Ethernet Interface	RJ45 socket, Female, 4-pin		
Speed	10/100 Mbps		
I/O Interface	SM2.54, 5P, Female/Male, 10-pin		
I/O Interface Input Terminals	IN1 / IN2 / IN3 / IN4		
Quantity	4		
Type	Level input (vs. General purpose input common negative terminal "GND IN")		
High-Level Input Impedance		10KΩ	
High Level	10V	24V	30V
Low Level			1.2V
Input Capacitance		10nF	
Quiet Input Current	0.8mA	2.2mA	2.8mA
Preset Function	Monitoring Area Group Selection (IN1…IN4) Force Cancel (IN1)/Force Enable (IN2) of Area Monitoring Signal, Valid Level: High Level Power Saving and Life Extension Control (IN3/IN4), Valid Level: High Level		
I/O Interface Output Terminals	OUT1A /OUT2A /OUT2B /OUT3A /OUT4A		
Quantity	4 (OUT2A and OUT2B are redundant outputs that are fully synchronized physical signals.)		
Type	PNP switch output (vs. polarity is "positive power supply terminal")		
Power-On Status	Broken		
Switching Voltage	10V	24V	30V
Output Current (Single Channel)			100mA
Output Current (Total)			400mA
Output Capacitance			300pF
Preset Function	Equipment ready (OUT1A), active status: ON Area monitoring signal output (OUT2A…OUT4A), active status: Configurable		

1. Depends on the location and timing of the measured target, excluding TCP/UDP network transmission delay;
2. Delay under sensitive parameter mode conditions, related to the complexity of the area monitoring configuration, excluding TCP network transmission delay;
3. Delay under sensitive parameter mode conditions, related to the complexity of the area monitoring configuration;
4. Excludes interface cables;
5. Operating parameters under DC24V power supply conditions.

10.2 Measurement coordinate system/scan range/range

Figure 10.1 Measurement coordinate system/scan range/range

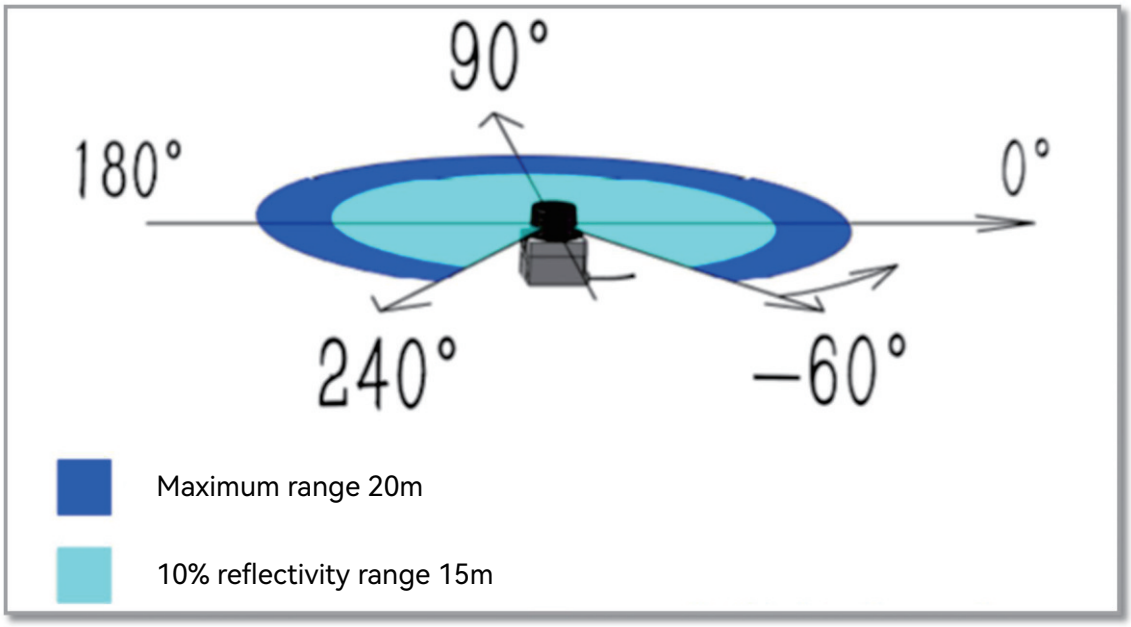

10.3 Equipment outline drawings

Figure 10.2 Equipment outline drawing

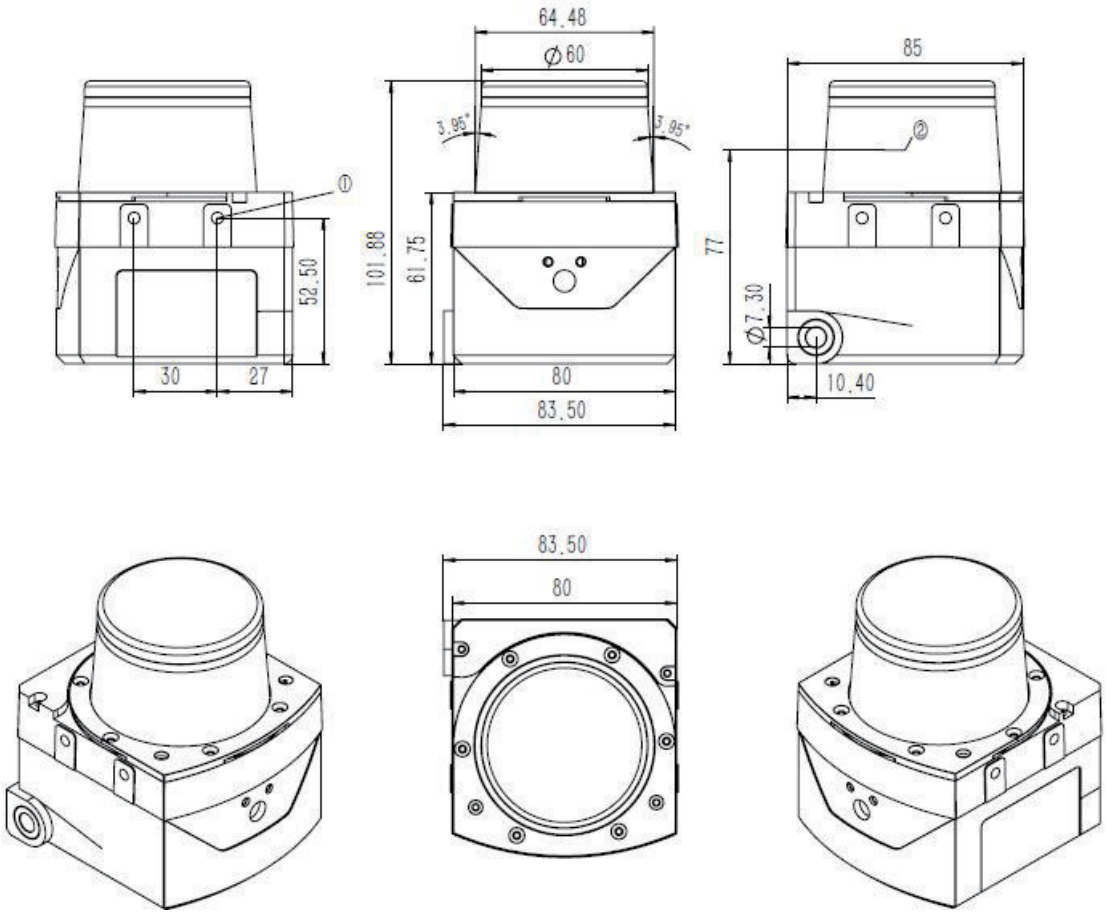

① Mounting hole: M4X10

②Height of light-emitting surface: 77

Unit: mm

10.4 Part Outline Drawings

Figure 10.3 Outline and Assembly Drawings

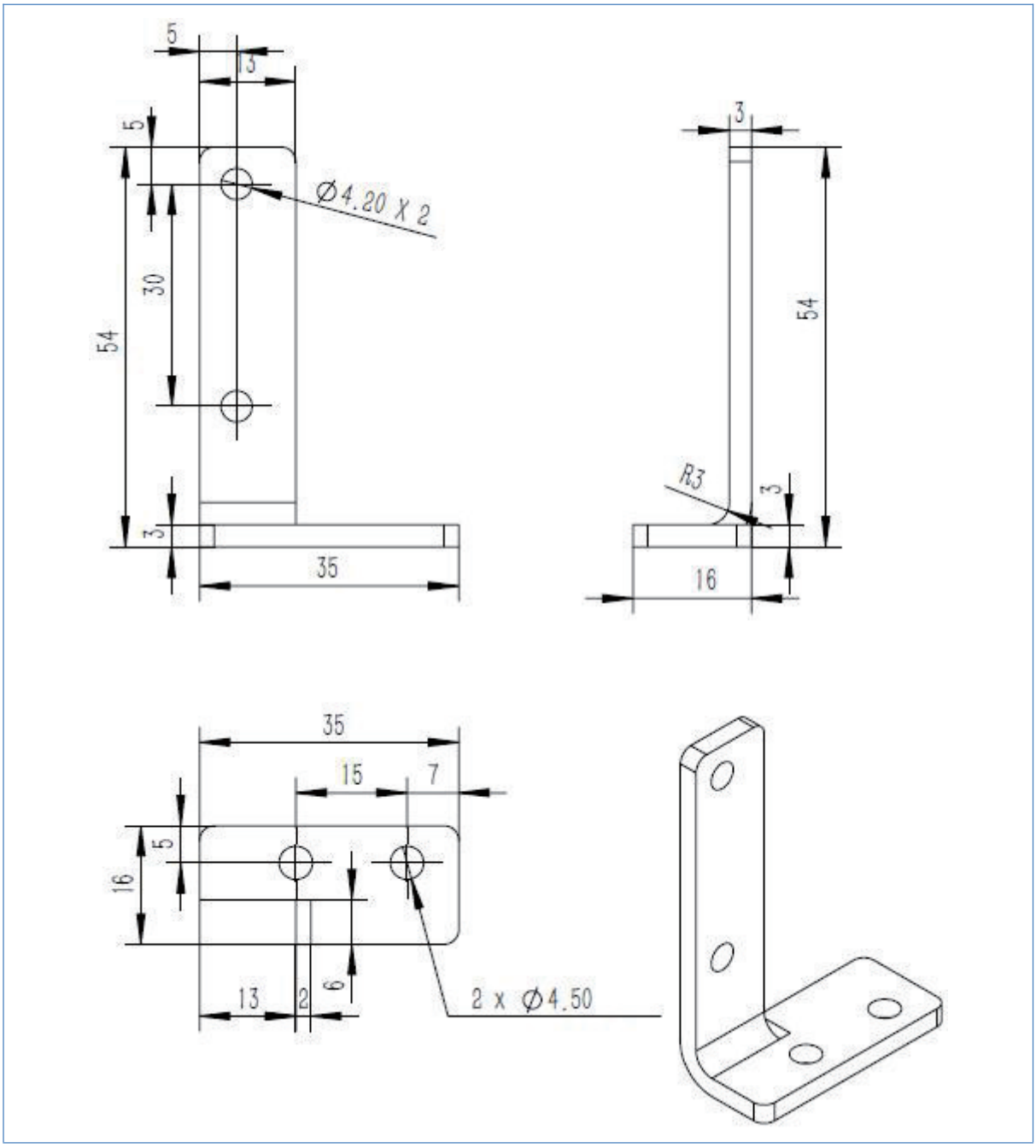

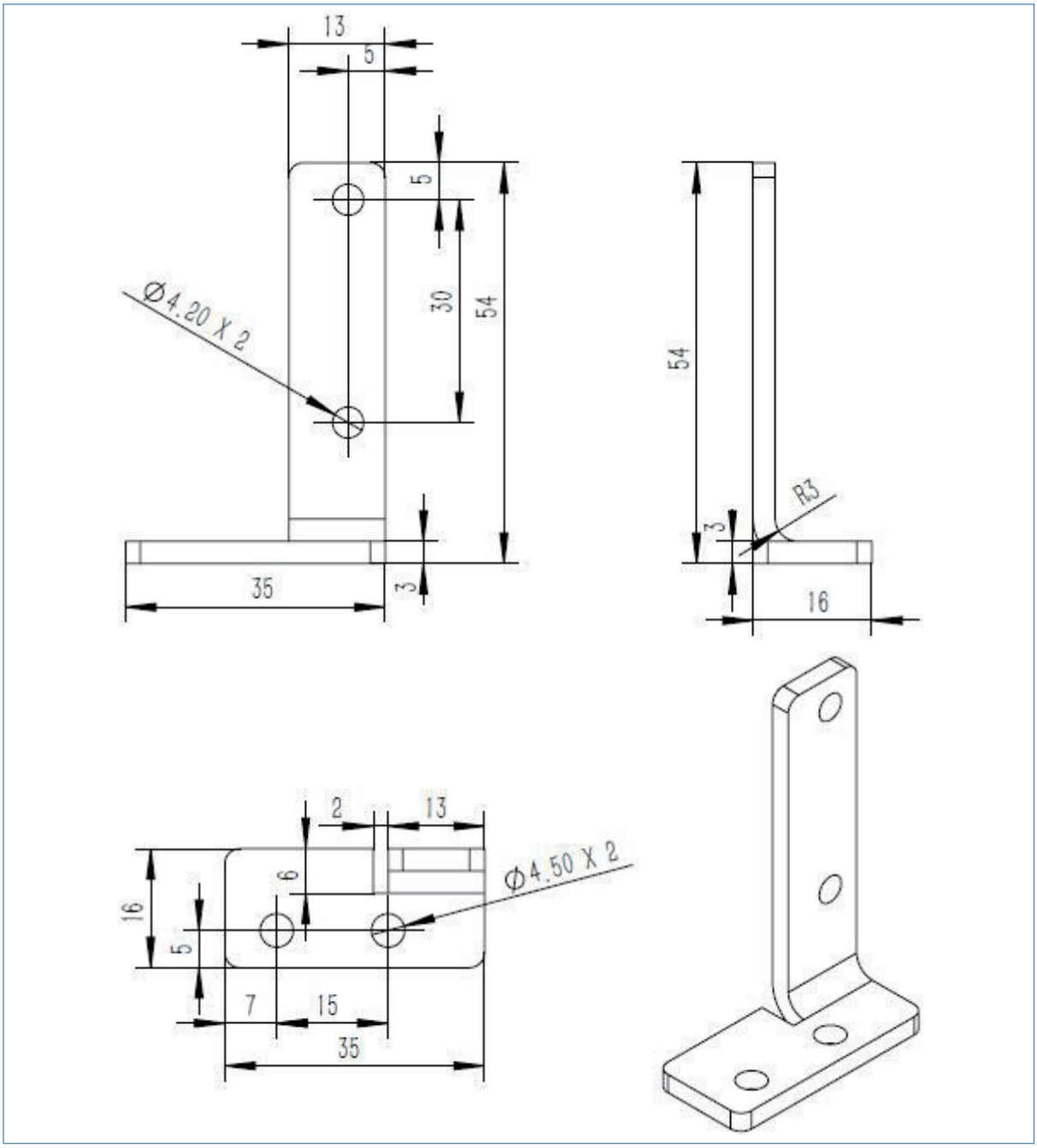
13
5
5
30
54
Ø4.20 X 2
35
3
54
R3
3
16
2
13
6
16
5
Ø4.50 X 2
7
15
35

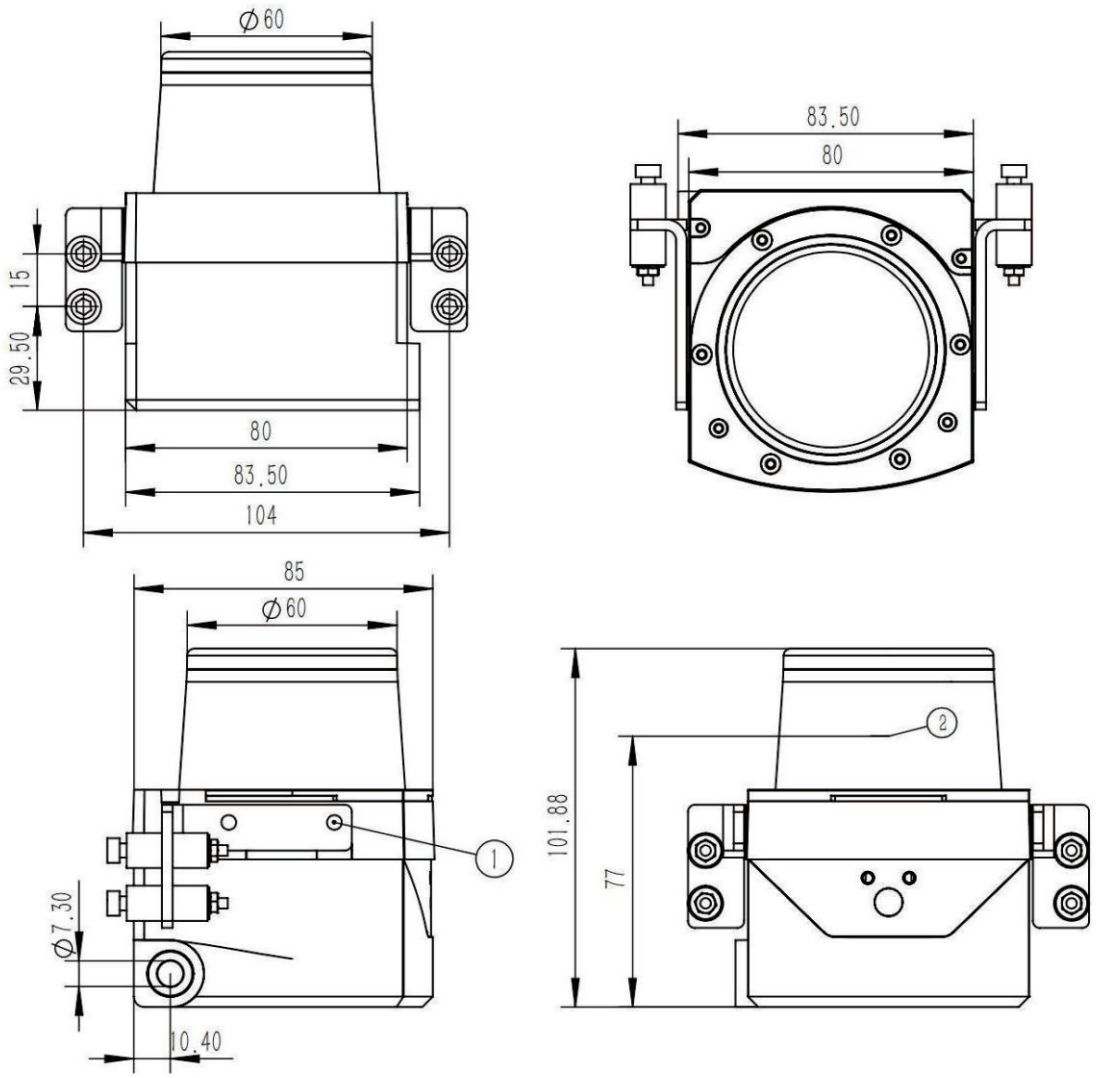

Notes	① Mounting hole: M4X8 ②Height of light-emitting surface: 77 Unit: mm

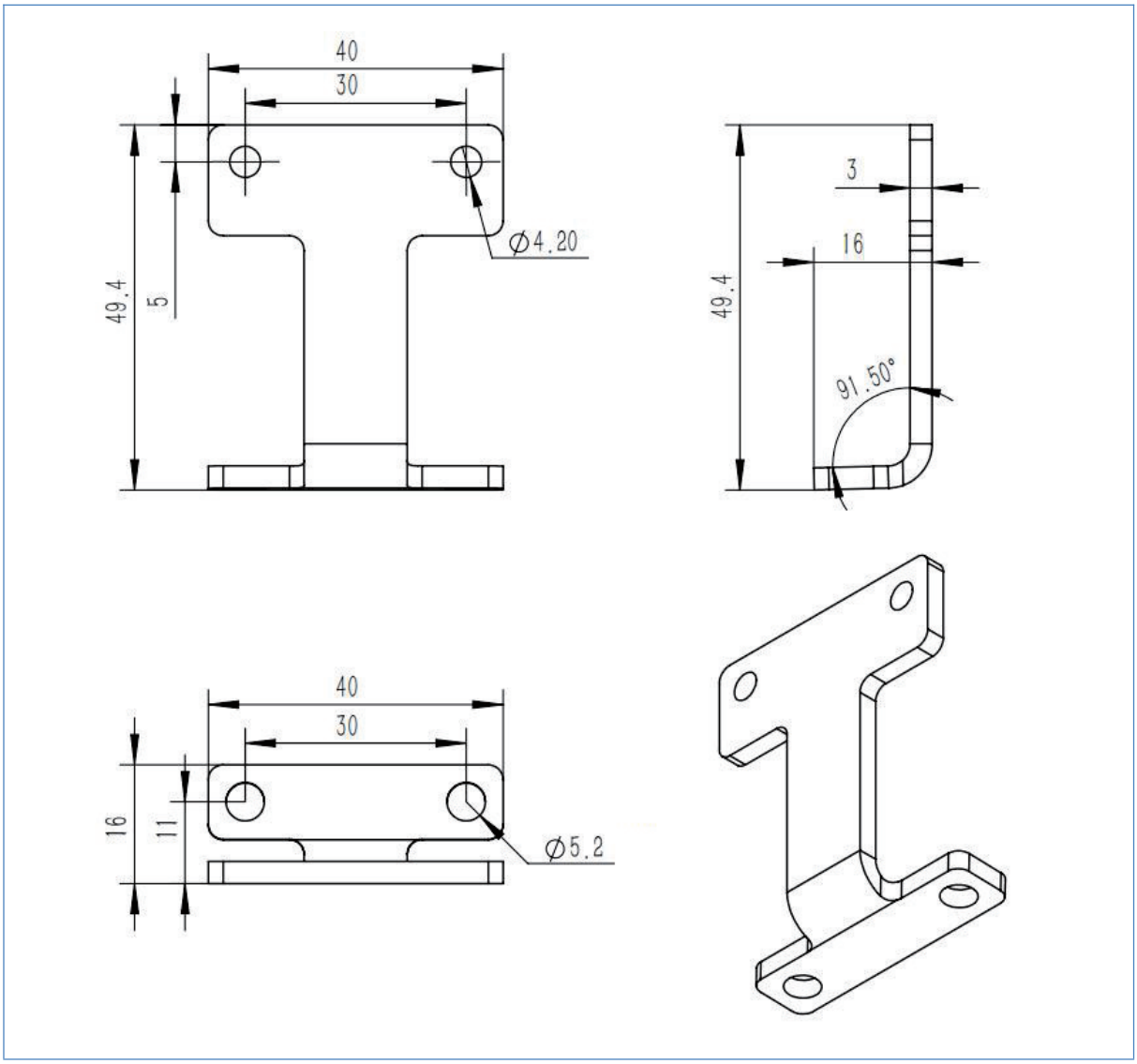
40
30
49.4
5
Ø4.20
3
16
49.4
91.50°
40
30
16
11
Ø5.2

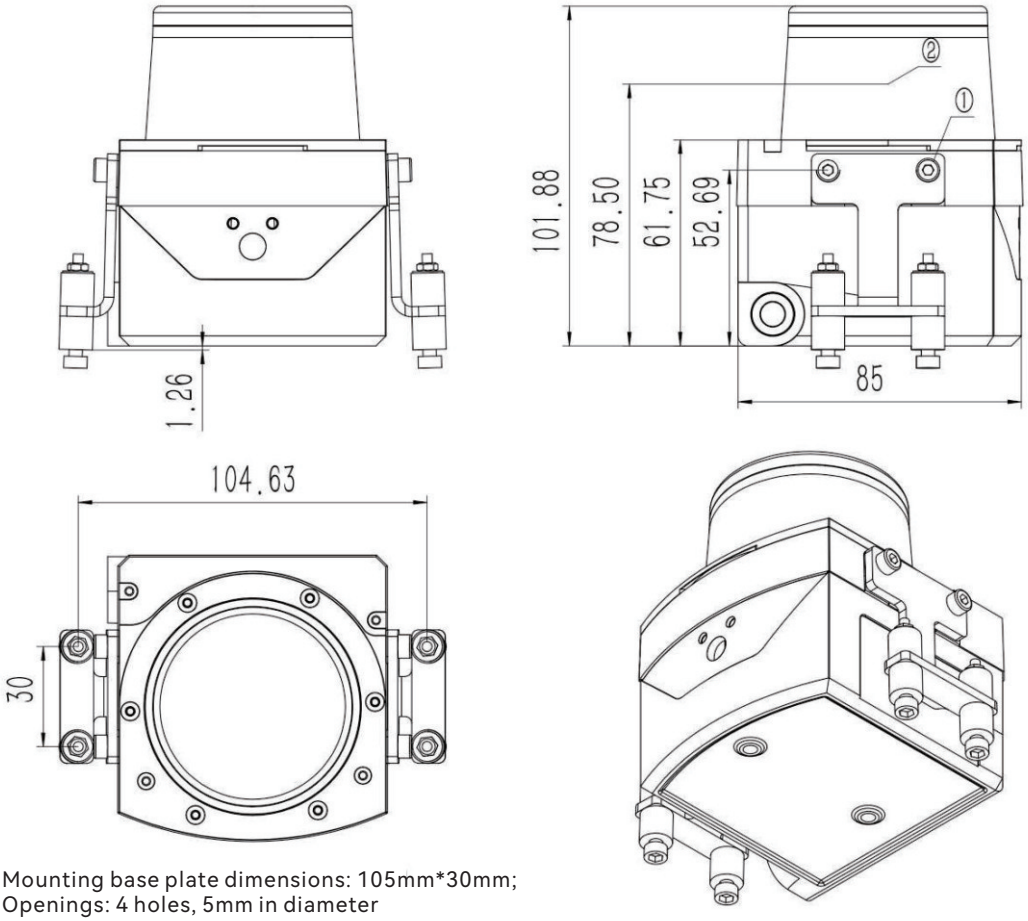

Mounting base plate dimensions: 105mm*30mm;
Openings: 4 holes, 5mm in diameter

Notes	① Mounting hole: M4X8 ②Height of light-emitting surface: 78.5 Unit: mm

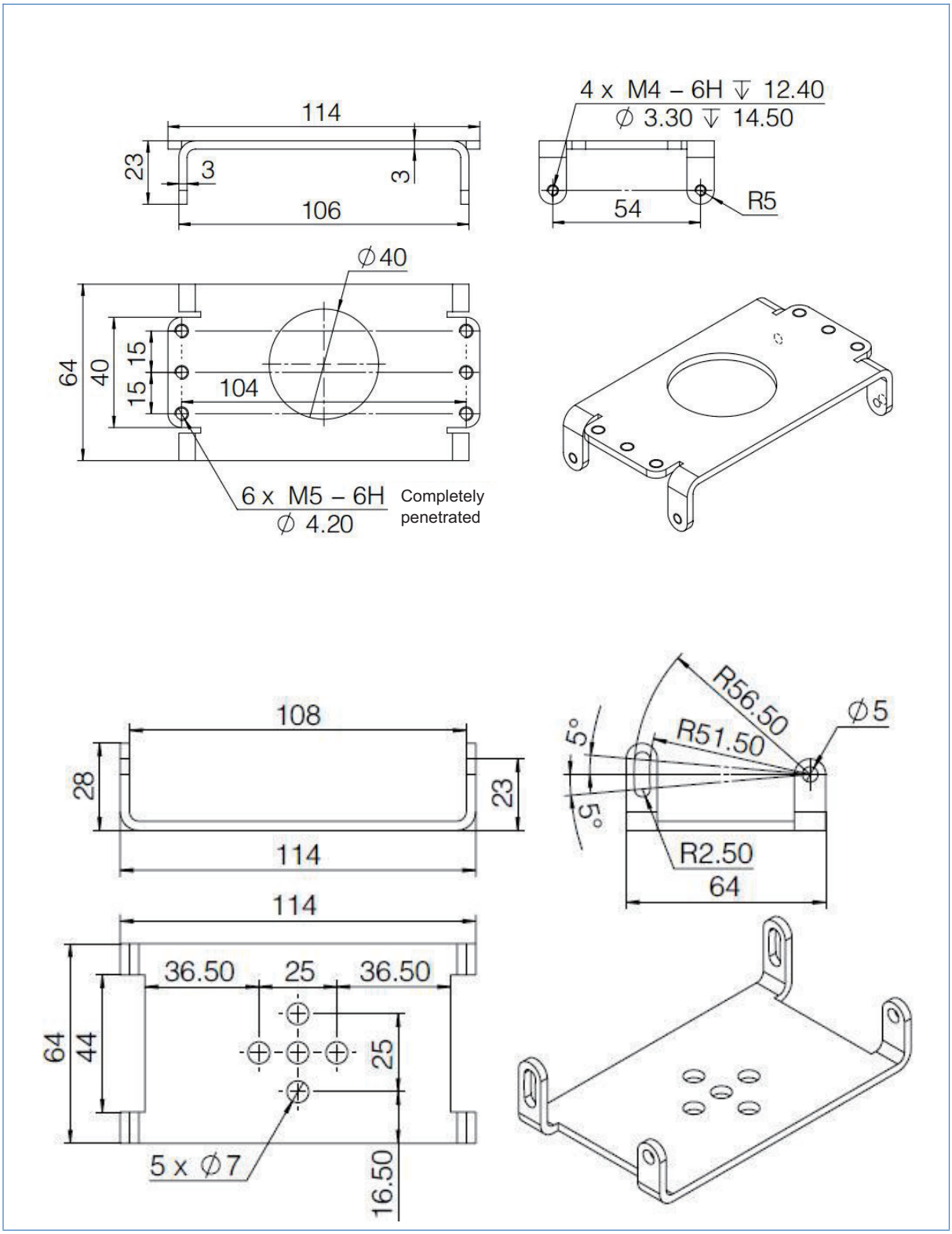
114
23
3
3
106
4 x M4 – 6H ↧ 12.40
∅ 3.30 ↧ 14.50
54
R5
∅40
64
40
15
15
104
6 x M5 – 6H
∅ 4.20
Completely penetrated
108
28
23
114
R56.50
R51.50
∅5
5°
5°
R2.50
64
114
36.50
25
36.50
64
44
25
5 x ∅7
16.50

DADISICK®

DADISICK TECHNOLOGY LIMITED

Website: **ru.dadisick.com**