Background Suppression Photoelectric Sensor DK-GB43 Series

Product Features

- Unaffected by target color and background color, objects can be detected accurately;
- High precision, small differential distance, can detect small step difference;
- Anti-interference, can also resist variable frequency fluorescent lamps based on unique external interference light avoidance algorithm;
- Perfect application of BGS function, no need to adjust the detection distance even when changing production on the production line where different color workpieces are circulated;

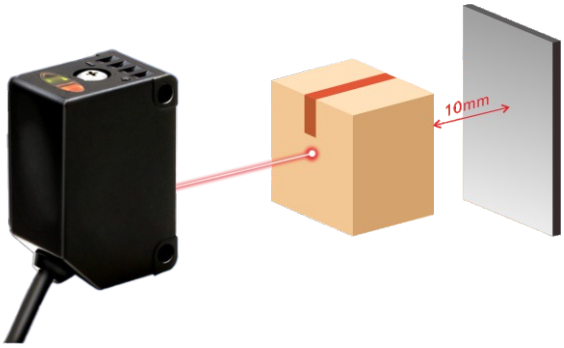

Product Specifications

Appearance (Please refer to the actual product)		
Model	NPN output	DK-GB43-100N-ZAA
	PNP output	DK-GB43-100P-ZAA
Sensor principle		Diffuse reflection photoelectric sensor, background suppression function
Shell shape (light beam exit)		Square
Maximum detection distance		30-1500mm
Stable detection distance		60-1000mm
Light source type		Infrared light
Light spot size (distance)		Φ10-40mm
Power supply voltage		12-24V DC
Light exposure or not		Visible red light
No-load current		5 mA
Switch output		NPN/PNP
Switch type		Normally open and normally closed wiring switch
Output current		≤50 mA
Response time		2ms
Switching frequency		450Hz
Connection type		Cable, 4 cores, 2m
Wire material		PVC
Protection circuit		Reverse polarity protection, 1 load short circuit
Protection structure		IP64
Ambient operating temperature		-25+50°C
Ambient storage temperature		-25+70°C
Shell material		Plastic, ABS
Optical element		Plastic, PMMA

Input/Output Circuit

DK-GB43-100

NPN output

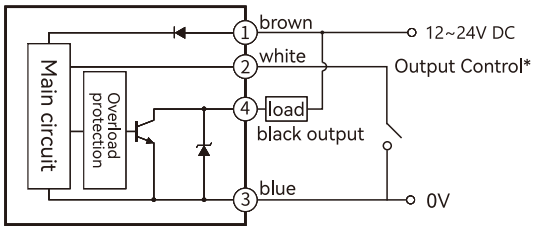

*NO white --- suspended, NC white --- 0V

PNP output

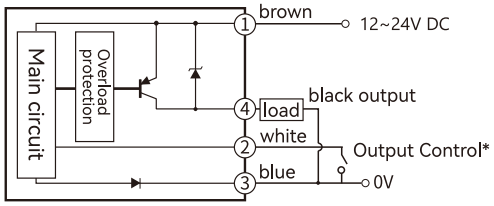

*NO white --- suspended, NC white --- 0V

Product Specifications

DK-GB43-100

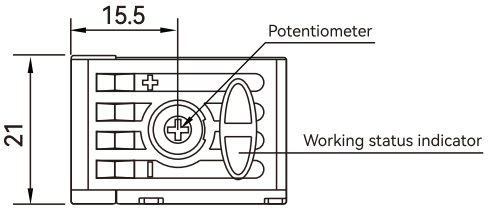

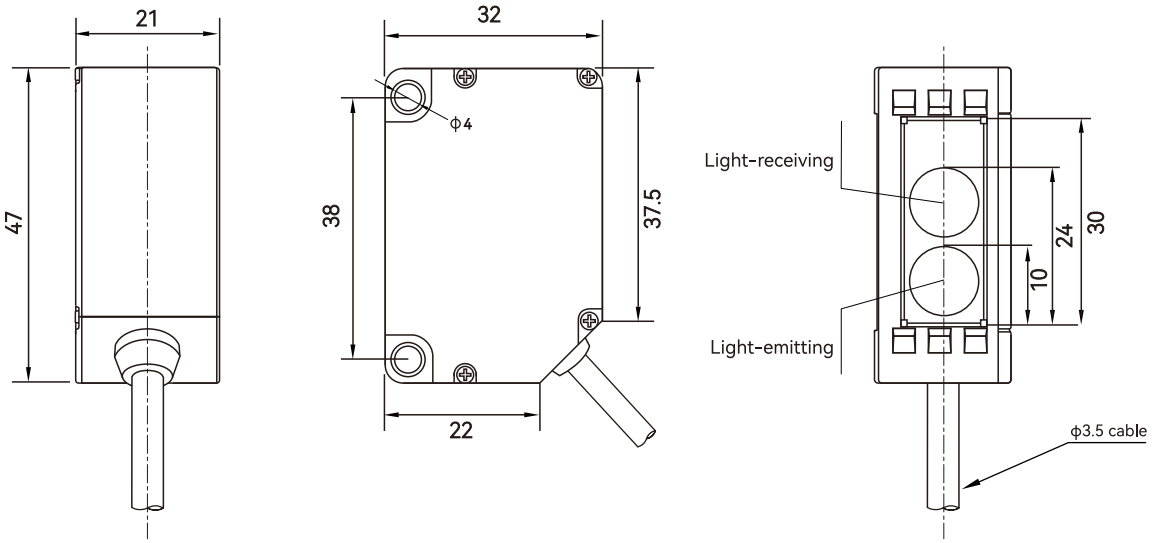

Unit: mm