DADISICK®

TECHNICAL DATA SHEET

SAFETY LIGHT CURTAIN SENSOR
Emitter: KT14/72-994-2BB-E
Receiver: KT14/72-994-2BB-R

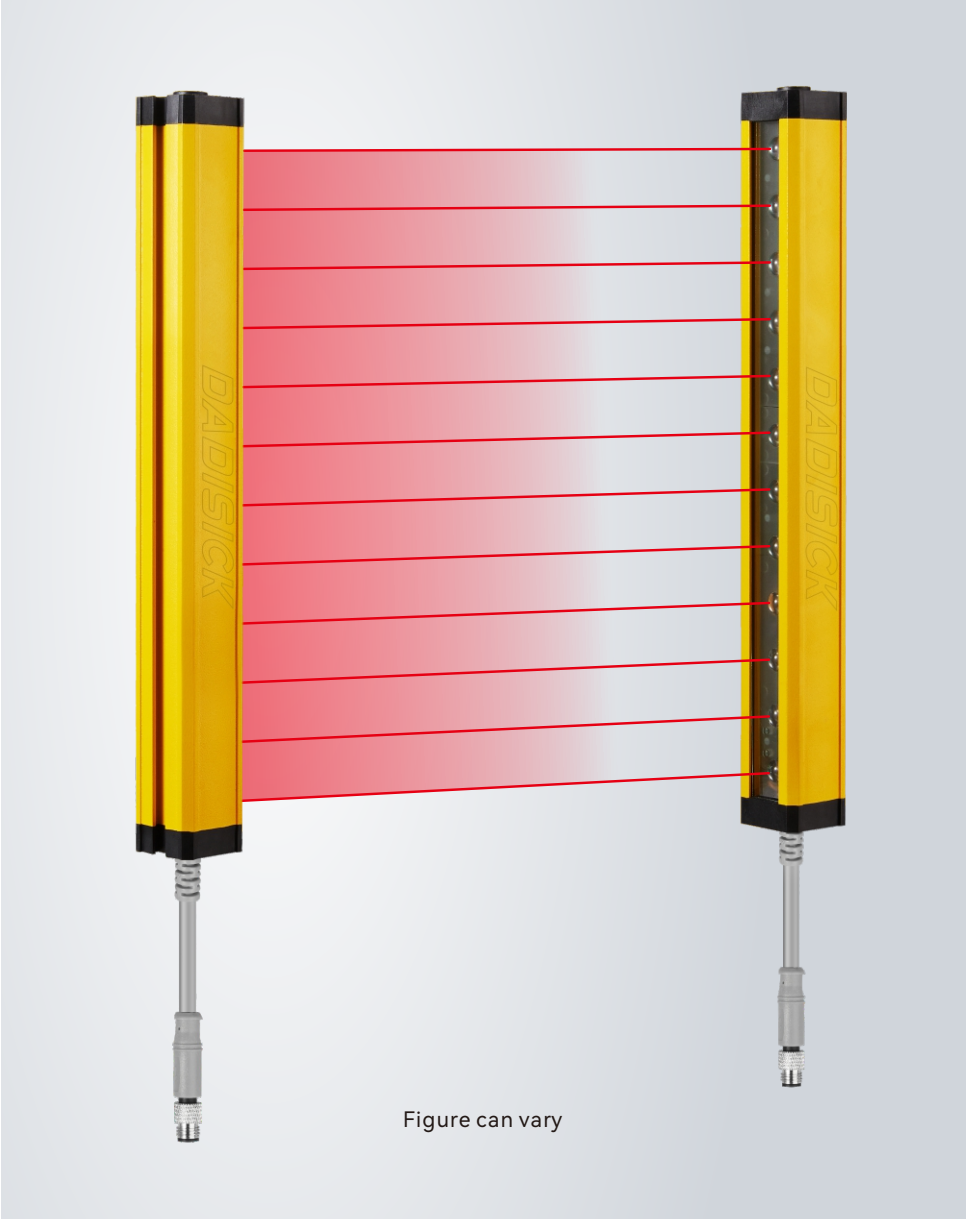

Figure can vary

Contents

- Product application
- Technical data
- Operation and display
- Dimensioned drawings
- Electrical connection
- Wiring diagram
- Accessories

GB/T 19001-2016

DONGGUAN DADI ELECTRONIC TECHNOLOGY CO., LTD
Website: www.dadisick.com Email: sale@dadisick.com

We reserve the right to make technical changes
2023-05-22

Product application

A. Light curtain can achieve full protection for the slider can be stopped at any position on the press machine.

B. The light curtain can only achieve upper dead point protection if the slider can not be stopped at any position on the press machine.

C. Realize the regional protection for the industry manipulator, injection molding machines, packaging equipment, automation equipment, assembly wires and other dangerous work area.

D. Used to detect and alarm object.

Technical data

Basic data of Receiver and Emitter

Standard packaging	
Product model	KT14/72-994-2BB-E and KT14/72-994-2BB-R
Standard configuration	One receiver, one transmitter, two data lines, one right-angle rack, and one t-shaped screw
Light curtain form	Infrared radiation type
Application	Standard industrial environment - finger protection

Features	
Resolution ratio	14mm
Check the accuracy	22mm
Number of beams	72
Protection height	994mm
Total height	1033mm
Detection distance	30-6000mm
Response time	≤15ms

Synchronization	Line synchronization
Consumption current	≤200mA
Output mode	2-circuit of PNP, with current of 500mA and voltage below 1.5V, polarity, short circuit and over-cutting protection
Output status	ON (receiving indicator green light)
Indicator light	Transmitter: power indicator light (red); receiver: output indicator light on (green), blackout (red)
Wavelength	850nm
Type of light	Infrared light (NIR), invisible
Function	Automatic reset

Mechanical data	
Overall dimension	29*29*1033mm
Housing material	Metal
Metal shell	Aluminium
Lens front screen material	Acrylic
Upper and lower cover materials	ABS reinforced nylon PA66+30% GF

Environmental data	
Protection grade	IP65
Resistance to ambient light	Incandescent light: illumination of light-receiving surface 3000Lx; Sunlight: illumination of light-receiving surface 10000Lx
Ambient temperature	Working temperature: - 10~+40 ℃ (but not frozen), storage temperature: - 25 -+55 ℃
Ambient humidity	Working time: 35~85% RH, saving time: 35~95% RH

Performance data	
Protection circuit	Short circuit protection Overvoltage protection
Supply voltage	24VDC,-20...20%
Maximum current consumption	150mA
Fuse	2A half time interval

Output	
Number of safe output circuits (OSSD)	2-circuit
Type	Safety circuit output circuit OSSD
Minimum switch voltage high	18V
Minimum switch voltage low	2.5V
Typical switching voltage	22.5V
Voltage type	DC
Maximum current load	380mA
Load inductance	two thousand
Load capacity	zero point three
Maximum residual current	0.2mA
Typical residual current	0.002MA
Voltage drop	1.5V
Safety switch output 1	Connection pin 3, WHITE OSSD 1
Switching element	Transistor PNP
Safety switch output 2	Connection pin 4, BLACK OSSD 2
Switching element	Transistor PNP

Certificate	
CE TÜV	No.E8A 104143 0001 Rev.00
ROHS certification	No.BSTDG180811032001CC
CE TYPE 4	No.ICR Polska/VC/HS221214
UL	No. 4790783741.1-S
GB/T	No. HIC180327 GB/T 19001-2016 idt ISO 9001:2015

Operation and display

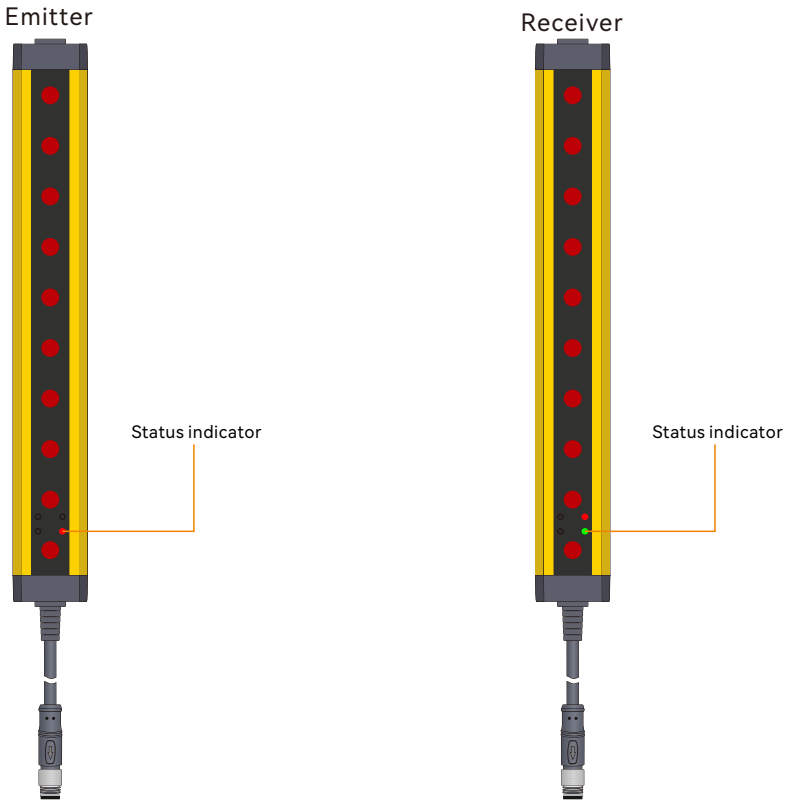

Normal operation of light curtain	LED Indicator status	Explain
Emitter	Red, always on	Turns on the power
	Receiver and emitter are red	Receiver and Emitter are not aligned
Receiver	Green	All light paths are connected
	Red	Light path shading
	Lights flashing	Interference or overstep detection range

Dimensioned drawings

KT 14mm series

Unit: mm

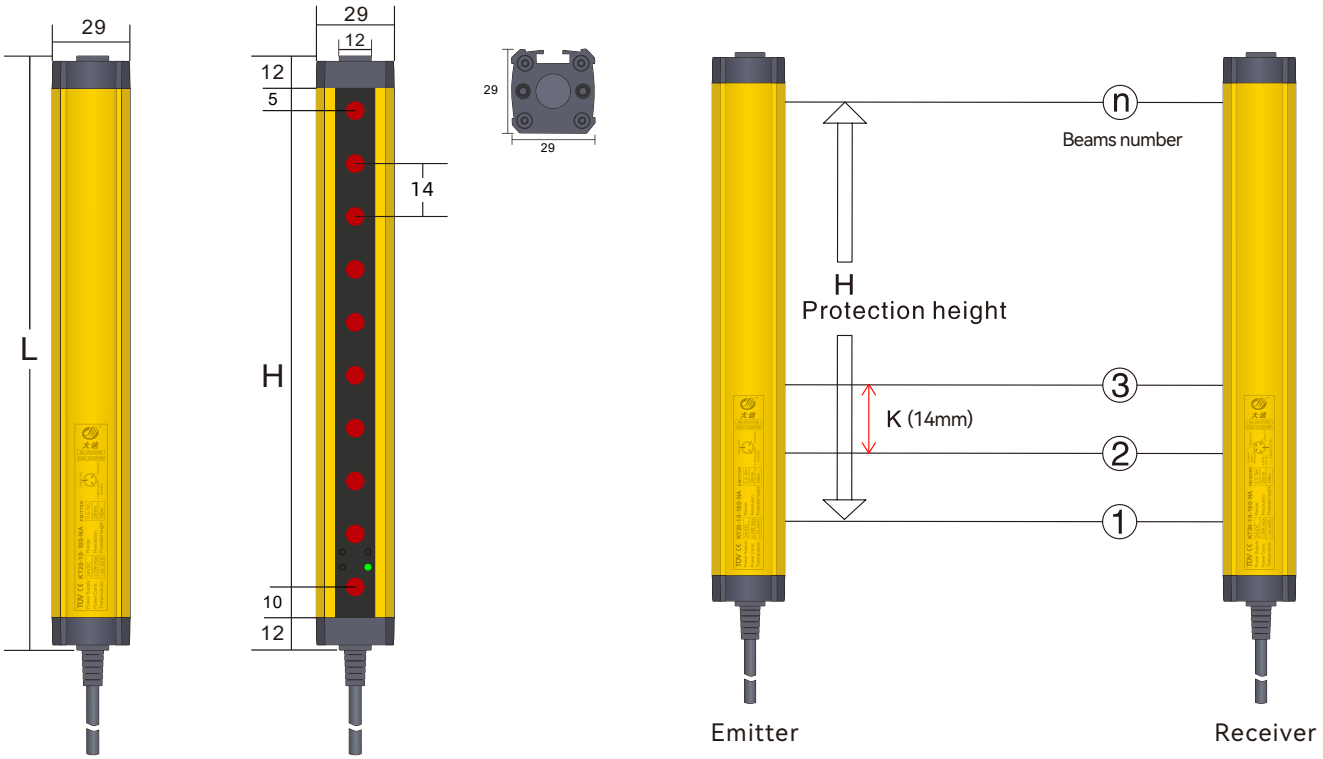

Remarks: L:Total length of light screen L=12+5+H+10+12 H:Height of protected area H= (n–1) * 14 K:Resolution ratio n:Beams number

KT 14mm specification list

Resolution	Light beam	Protection height (H)	Total height (L)	Product model	Signal output mode		Detection range
					Outputs	PNP output	
14mm (K)	6	70	109	KT14/06–70	2	PNP	0.3–6m
	8	98	137	KT14/08–98	2	PNP	0.3–6m
	10	126	165	KT14/10–126	2	PNP	0.3–6m
	12	154	193	KT14/12–154	2	PNP	0.3–6m
	14	182	221	KT14/14–182	2	PNP	0.3–6m
	16	210	249	KT14/16–210	2	PNP	0.3–6m
	18	238	277	KT14/18–238	2	PNP	0.3–6m
	20	266	305	KT14/20–266	2	PNP	0.3–6m
	22	294	333	KT14/22–294	2	PNP	0.3–6m
	24	322	361	KT14/24–322	2	PNP	0.3–6m
	26	350	389	KT14/26–350	2	PNP	0.3–6m
	28	378	417	KT14/28–378	2	PNP	0.3–6m
	30	406	445	KT14/30–406	2	PNP	0.3–6m
	32	434	473	KT14/32–434	2	PNP	0.3–6m
	34	462	501	KT14/34–462	2	PNP	0.3–6m
	36	490	529	KT14/36–490	2	PNP	0.3–6m
	38	518	557	KT14/38–518	2	PNP	0.3–6m
	40	546	585	KT14/40–546	2	PNP	0.3–6m
	42	574	613	KT14/42–574	2	PNP	0.3–6m
	44	602	641	KT14/44–602	2	PNP	0.3–6m
	46	630	669	KT14/46–630	2	PNP	0.3–6m
	48	658	697	KT14/42–658	2	PNP	0.3–6m
	50	686	725	KT14/42–686	2	PNP	0.3–6m
	52	714	753	KT14/42–714	2	PNP	0.3–6m
	...	...	...	...	2	PNP	0.3–6m
	196	2730	2769	KT14/196–2730	2	PNP	0.3–6m
	198	2758	2797	KT14/198–2758	2	PNP	0.3–6m
	200	2786	2825	KT14/200–2786	2	PNP	0.3–6m

Electrical connection

Electrical interface	
Number of interfaces	2 (receiver and emitter)
Type	Emitter with M8 connector 3-pin,Receiver with M8 connector 5-pin
Interface metal	Copper nickel plating
Plug material	GY384 gray 30P
Allowable typical conductor section	0.25mm²
Maximum link cable	100m
Maximum allowable cable load	4.9A
Cable material	PVC

Cable description:

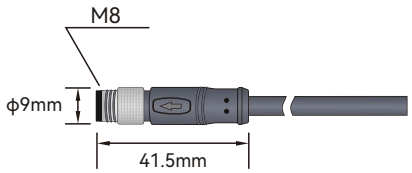

3-pin and 5-pin M8 cable connector straight
3m waterproof cable

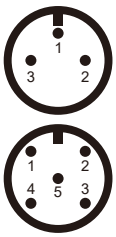

Emitter Wiring diagram		
Pin number	Line color	Name
1	BROWN	24V DC
2	BLUE	0V
-	-	-
-	-	-
3	YELLOW	Ground wire

Receiver Wiring diagram		
Pin number	Line color	Name
1	BROWN	24V DC
2	BLUE	0V
3	WHITE	OSSD 1
4	BLACK	OSSD 2
5	YELLOW	Ground wire

1. KT signal output selection (actual output of transistor working normally)

NPN NC

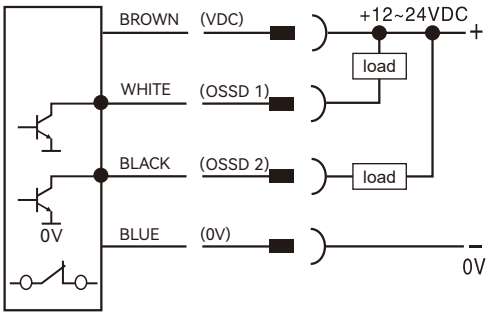

A

PNP NC

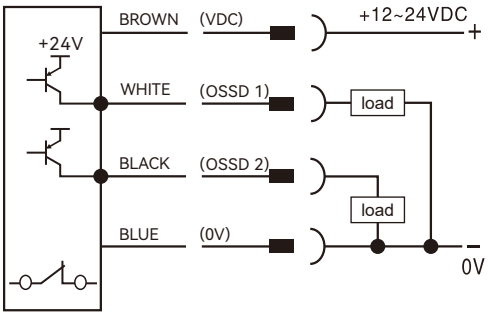

B

NPN NO

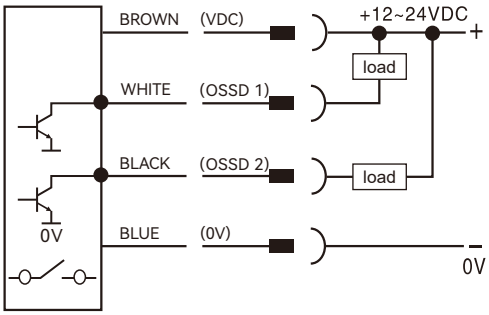

C

PNP NO

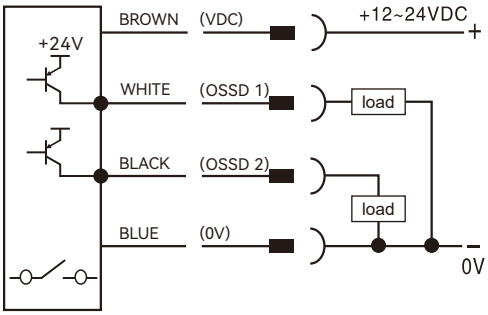

D

2. NPN output wiring diagram

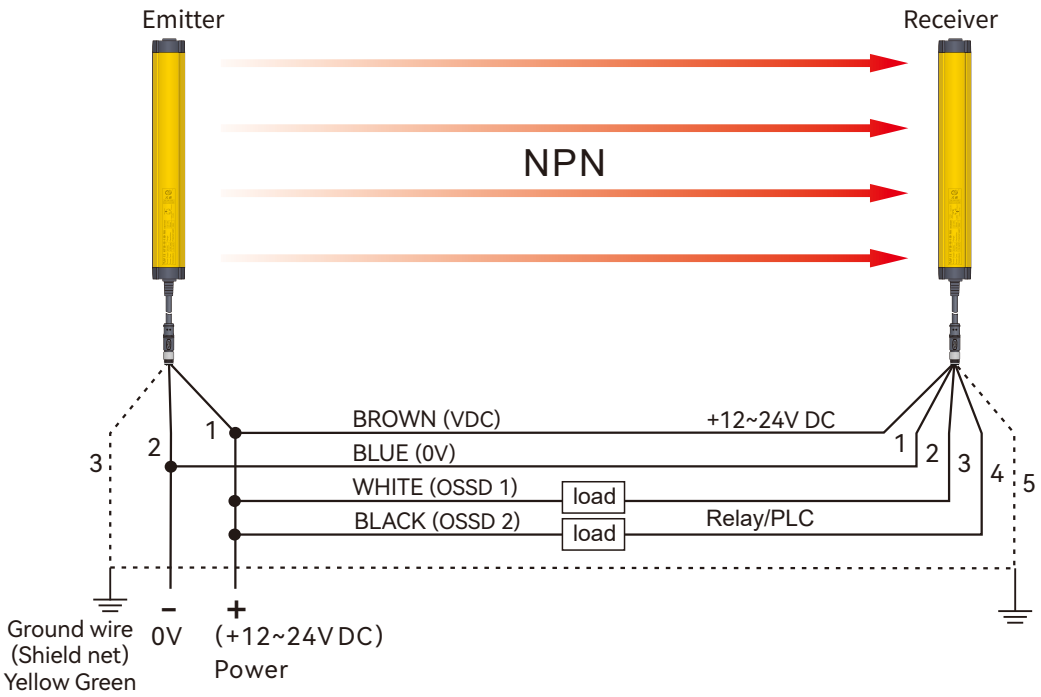

This picture is an example of NPN output wiring

3. PNP output wiring diagram

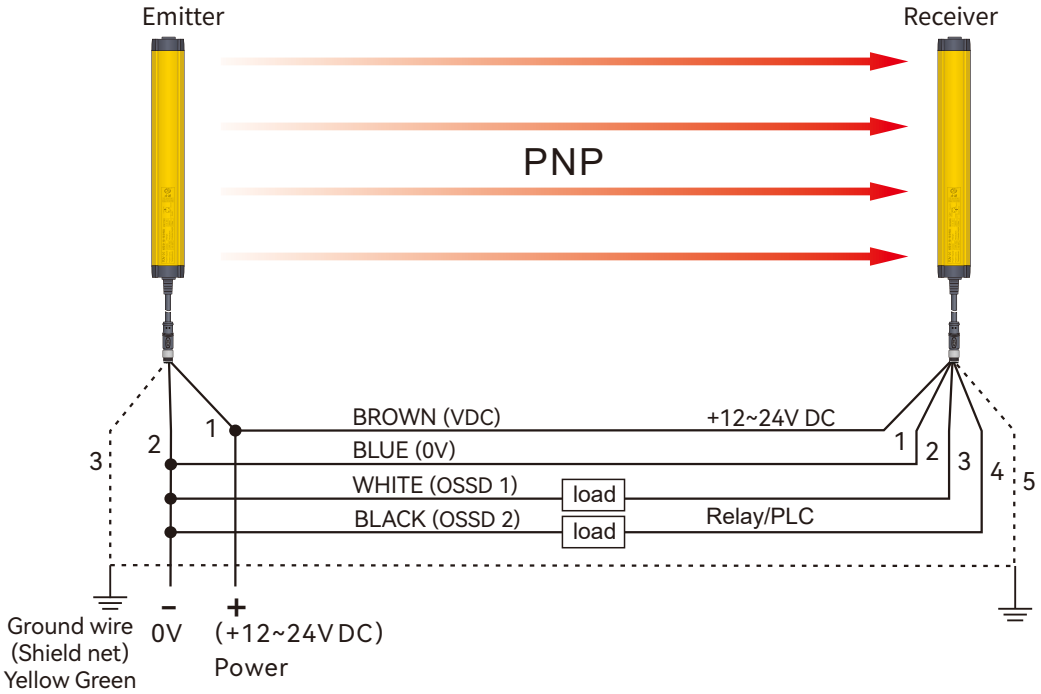

This picture is an example of PNP output wiring

4. Selection of safety light curtain controller

Name	Order separately	Model	Descriptions
Built-in controller		QET	Used to monitor the signal processing of KT series light curtain, and output one group of NO and one group of NC.
Safety relay		QSRN	QSRN safety relays have three groups of NO and one group of NC, with strong control capabilities. They are suitable for various signal monitoring in industrial places with high safety requirements, including emergency stop signals, safety door opening and closing signals, safety light curtain signals, and two-handed button signals.
Safety relay	Multifunctional switching switch	Ter-A	Equipped with a mode switch, it can be used for most safety components, such as light curtains, safety switches, carpet contacts, two handed switches, etc.Automatic/manual reset paddles for quick configuration.Dual channel monitoring circuit, safe and reliable.
Light curtain relay		QET-1	Output conversion between NC and NO for KT series light curtain.

4.1 Wiring diagram of QET built-in controller

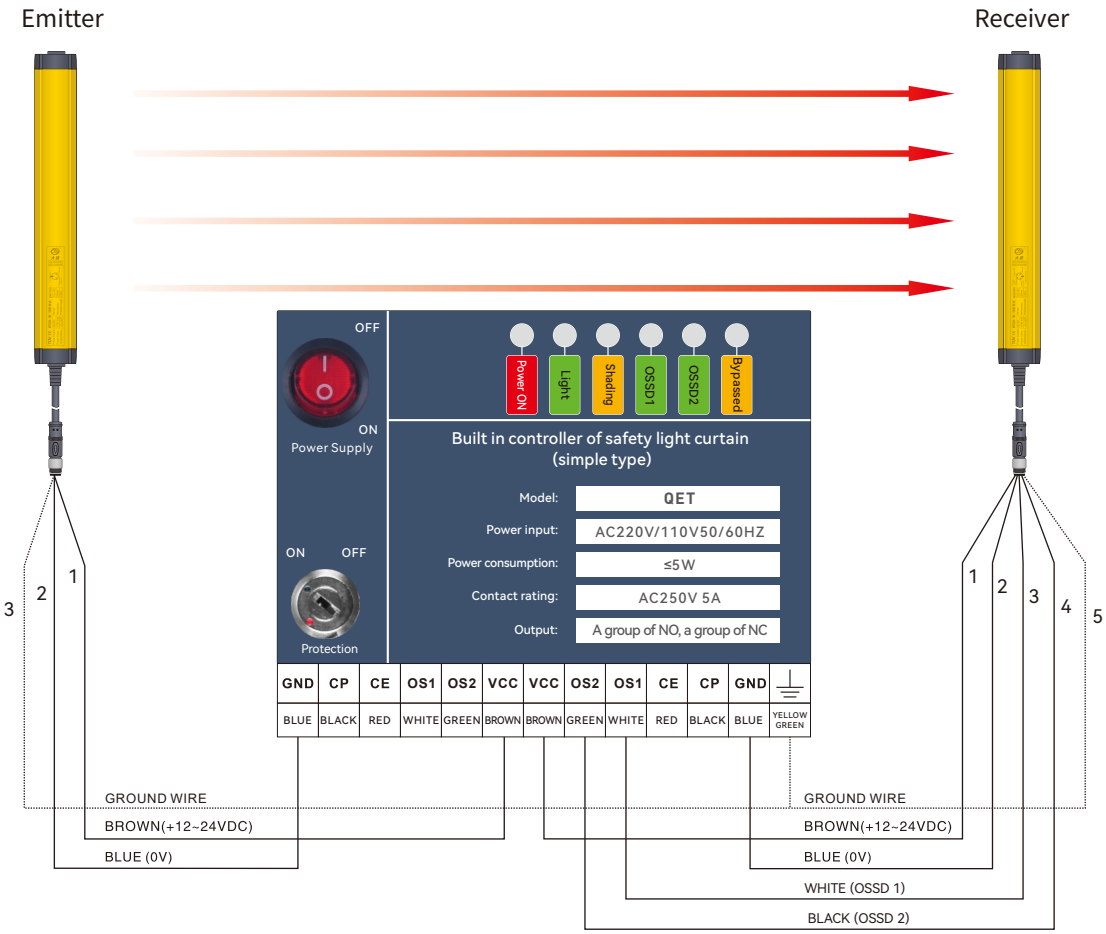

4.2 Wiring diagram of QSRN safety relay

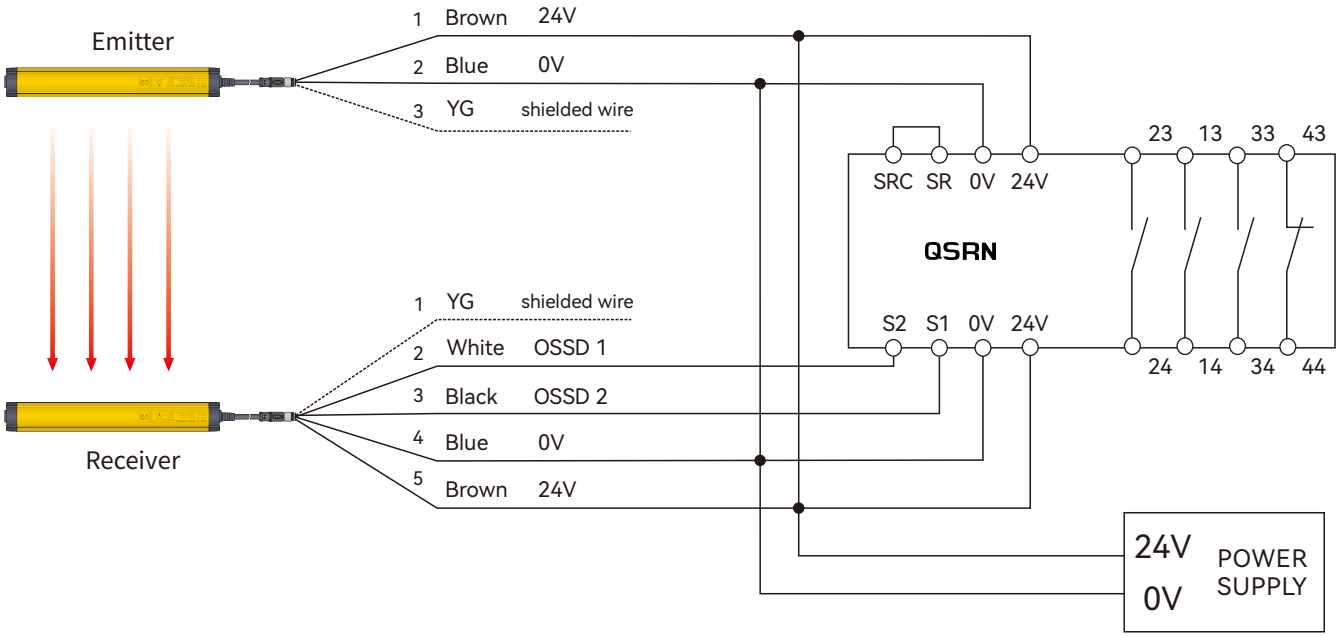

4.3 Wiring diagram of Ter-A safety relay

Dual channel light curtain PNP switch safety input, with automatic reset and PLC signal output.

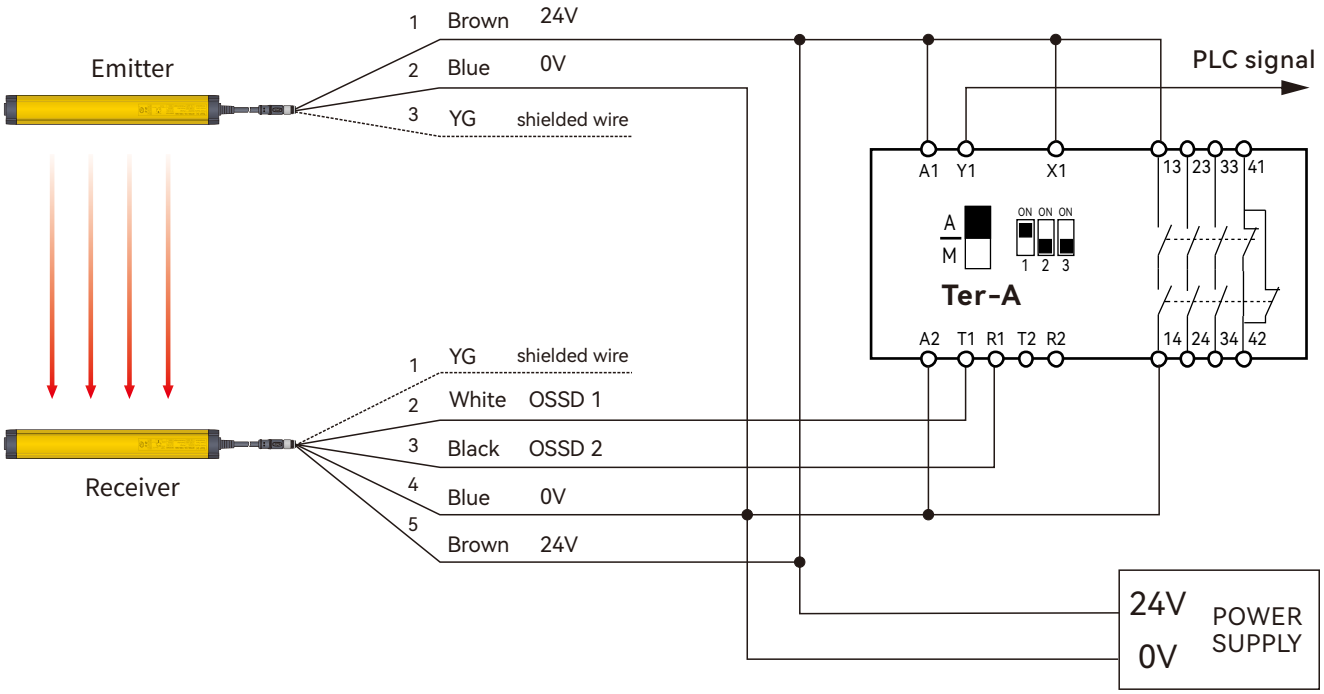

4.4 Wiring diagram of QET-1 light curtain relay

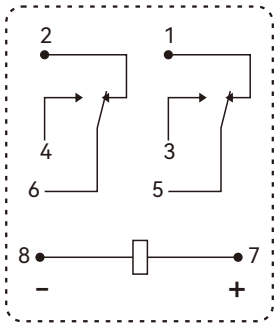

Circuit diagram

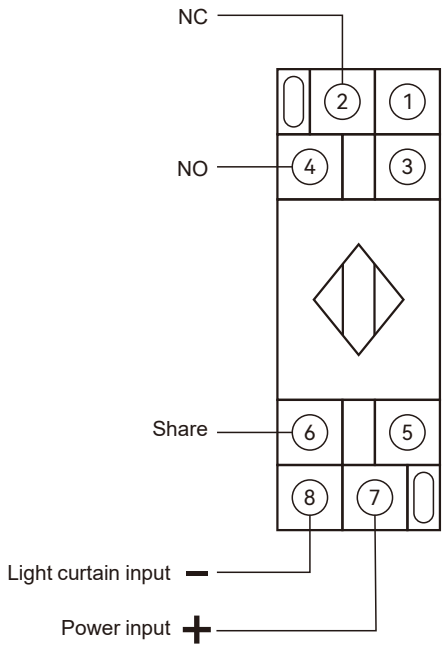

When not powered on

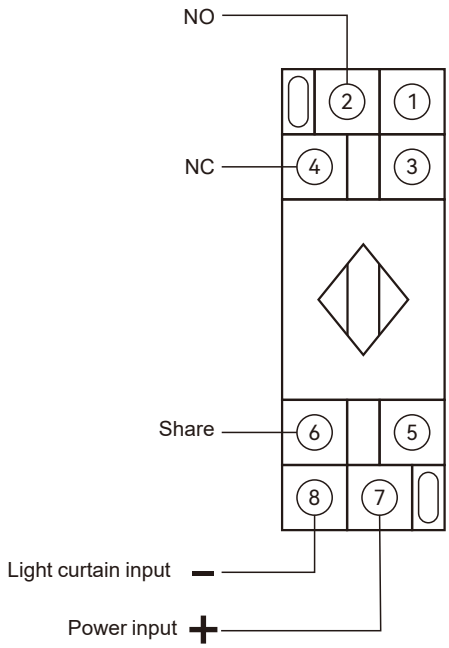

When powered on

4.5 Wiring between light curtain and PLC and one-chip computer system

NPN wiring:

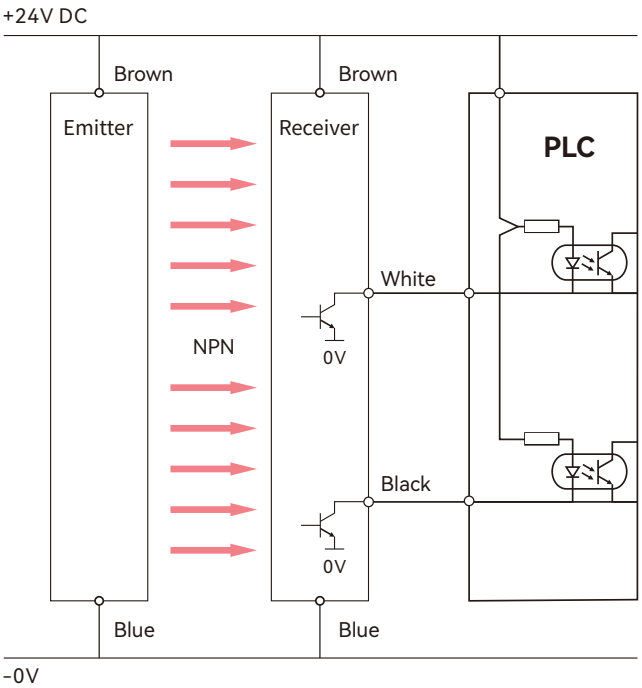

PNP wiring:

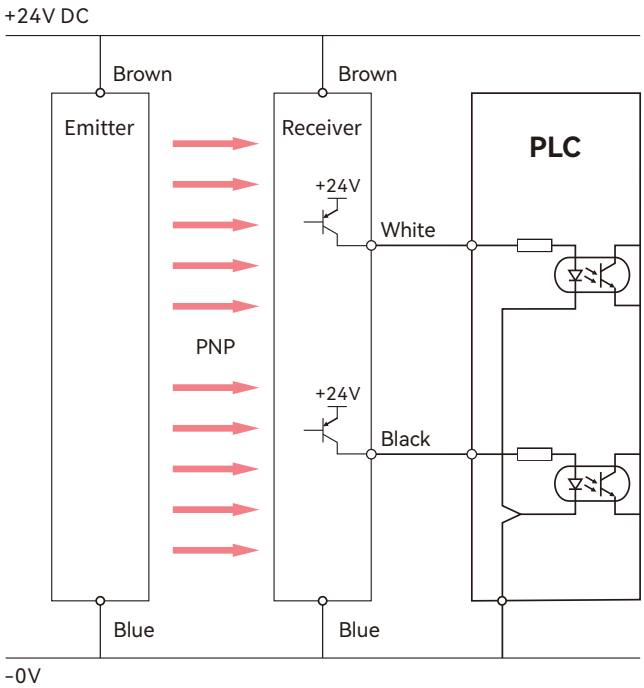

Accessories

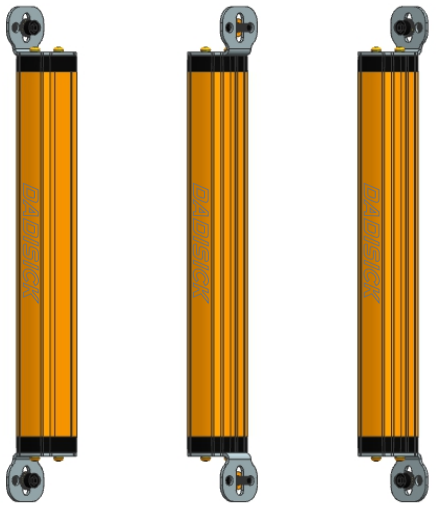

1. Installation method of right angle brackets
(Original accessories)

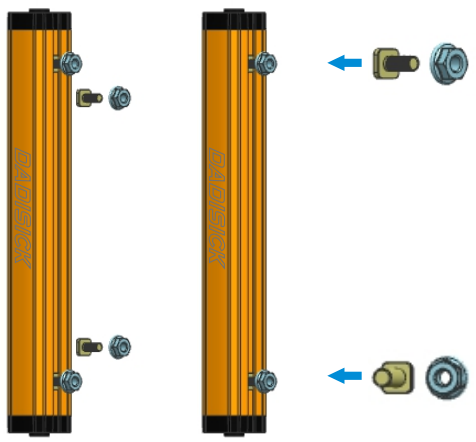

2. Installation method of T-shaped screws on the back
(Original accessories)

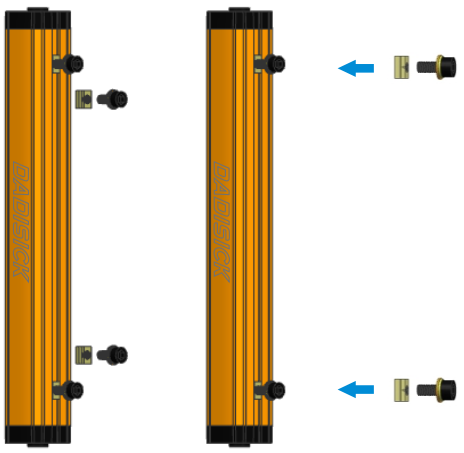

3. Installation method of convex nut
(Optional accessories)

Mounting bracket	Model: KT-08

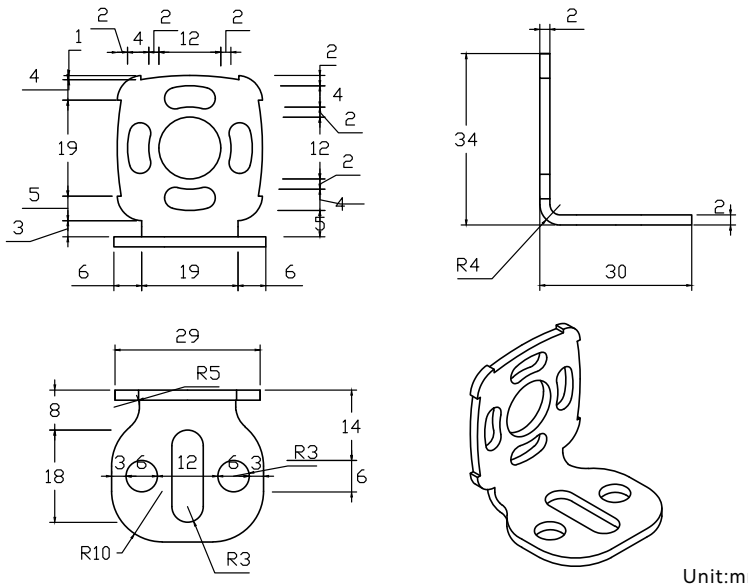

Unit:mm

T-screw	Model: QCA-02-1

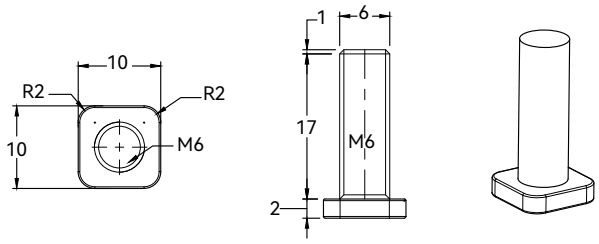

Unit:mm

Flange nut M6	Model: QCA-02-2

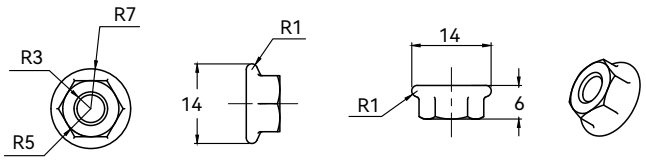

Unit:mm

Raised nut	Model: QCA-03-1

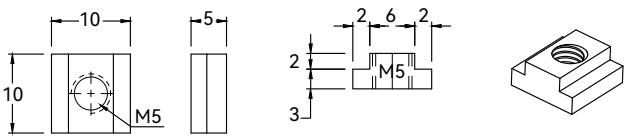

Unit:mm

M5 screw	Model: QCA-03-2

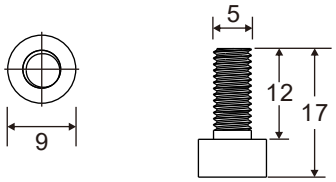

Unit:mm

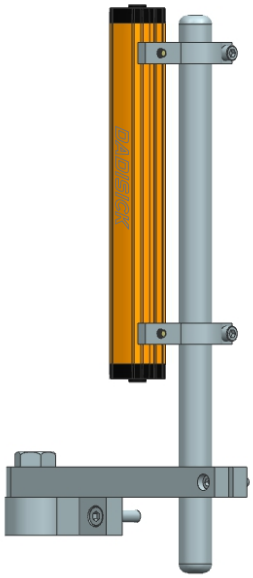

4.Stainless steel bracket installation
(Order separately)

Stainless steel bracket installation	Model: QCA-01

Clip:

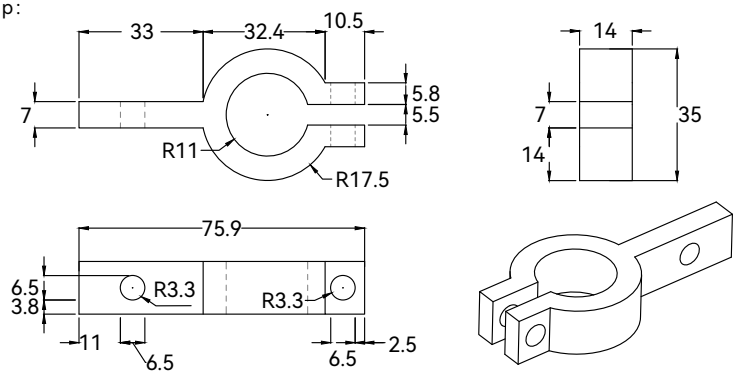

Aluminum round:

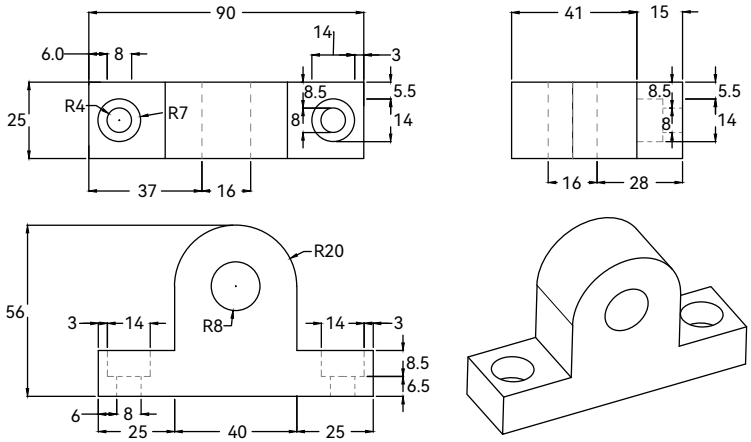

Aluminum arm:

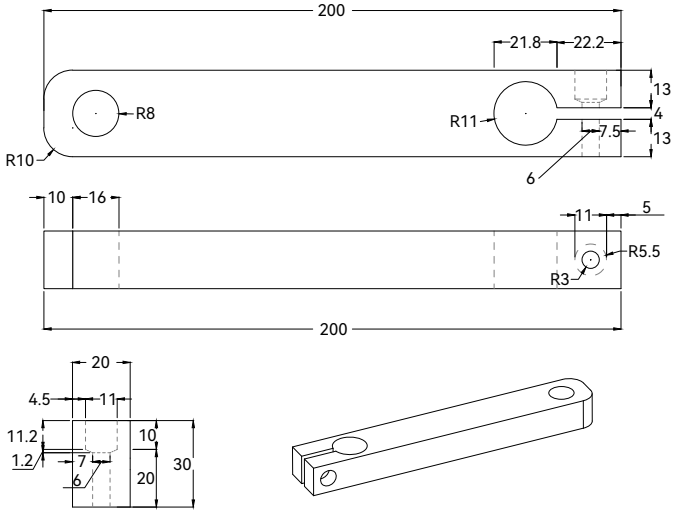

Steel pipe:

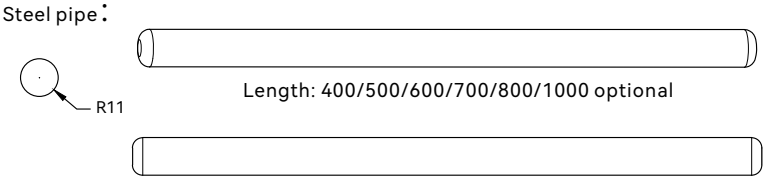

Length: 400/500/600/700/800/1000 optional

Unit:mm