CDM
CDMF

50Hz

Light Vertical Multistage Centrifugal Pump

Stock code:300145

Pumping Water Pumping Honor

CNP

Company profile

Founded in 1991,CNP has been listed on Shenzhen Stock Exchange on 9th December,2010;Stock name:CNP;Stock code:300145

In 2017,CNP's annual output has exceeded 700,000 units/set, with sales over 2 billion, and continues to grow at a double-digit annual rate. CNP has a national-level enterprise technology center, launched ultra-high efficient,new generation CDM (F) light vertical multi-stage centrifugal pump in 2017, All series of light stainless steel pump products grow stably. Advanced frequency conversion water supply equipment has been innovated to the 6th generation. Fire pump and diesel engine have obtained UL certification.TD in-line pump, NIS/NISO end suction pump, NSC split casing pump, WQ sewage pump, metering pump, oil pump and other pump products, can meet various application needs of different fields.

With over 300 domestic offices and foreign agents, CNP has a complete network of marketing services to meet the requirements of overseas and domestic needs. The products have been widely applied in the area of pressurization, industry, living water, cycling of air-conditioning water, heat supply, fire extinguishing system, pumping of underground water, treatment of sewage and waste water, chemical industry and desalination of sea water,etc.

CNP, a green water expert beside you.

Contents

Performance scope 1
Performance range 2
Summary 3
Motor 3
Working conditions 3
Application 3
Performance curve 3
Model definition 4
Max.working perssure 5
Min.inlet pressure 5
Max ambient temperature, altitude above sea level 5
CDM/CDMF 1,3,5 Sectional drawing 6
CDM/CDMF 10,15,20 Sectional drawing 7
CDM/CDMF 32,42,65,85 Sectional drawing 8
CDM/CDMF 120,150,200 Sectional drawing 9
CDM/CDMF 1 Performance curve 10
CDM/CDMF 1 Performance table 11
CDM/CDMF 3 Performance curve 12
CDM/CDMF 3 Performance table 13
CDM/CDMF 5 Performance curve 14
CDM/CDMF 5 Performance table 15
CDM/CDMF 10 Performance curve 16
CDM/CDMF 10 Performance table 17
CDM/CDMF 15 Performance curve 18
CDM/CDMF 15 Performance table 19
CDM/CDMF 20 Performance curve 20
CDM/CDMF 20 Performance table 21
CDM/CDMF 32 Performance curve 22
CDM/CDMF 32 Performance table 23
CDM/CDMF 42 Performance curve 24
CDM/CDMF 42 Performance table 25
CDM/CDMF 65 Performance curve 26
CDM/CDMF 65 Performance table 27
CDM/CDMF 85 Performance curve 28
CDM/CDMF 85 Performance table 29
CDM/CDMF 120 Performance curve 30
CDM/CDMF 120 Performance table 31
CDM/CDMF 150 Performance curve 32
CDM/CDMF 150 Performance table 33
CDM/CDMF 200 Performance curve 34
CDM/CDMF 200 Performance table 35
CDM/CDMF 1 Installation sketch 36
CDM/CDMF 3 Installation sketch 37
CDM/CDMF 5 Installation sketch 38
CDM/CDMF 10 Installation sketch 39
CDM/CDMF 15 Installation sketch 40
CDM/CDMF 20 Installation sketch 41
CDM/CDMF 32 Installation sketch 42
CDM/CDMF 42 Installation sketch 43
CDM/CDMF 65 Installation sketch 44
CDM/CDMF 85 Installation sketch 45
CDM/CDMF 120 Installation sketch 46
CDM/CDMF 150 Installation sketch 47
CDM/CDMF 200 Installation sketch 48

Performance scope

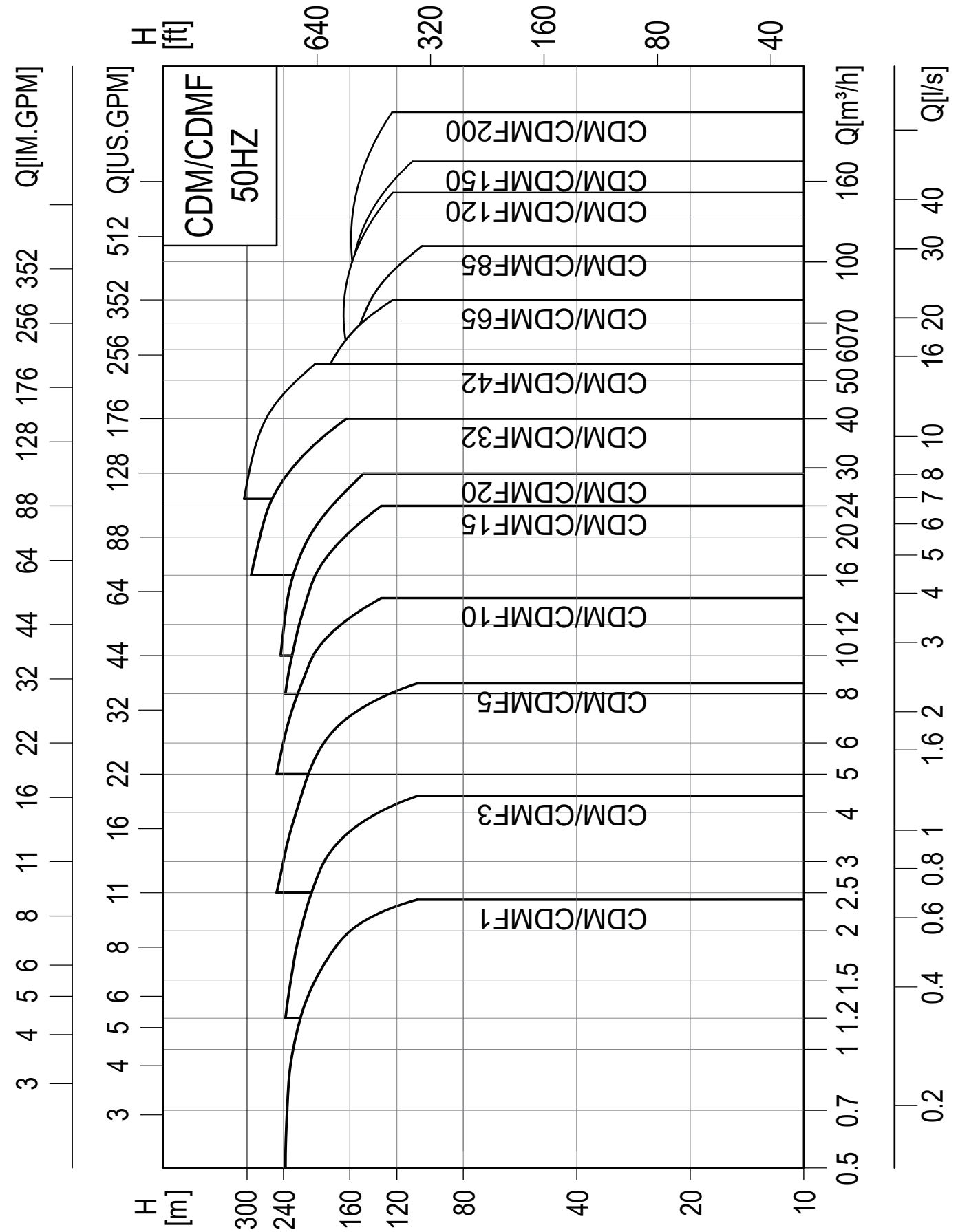

Performance range

Description		CDM/CDMF					
Rated flow [m³/h]		1	3	5	10	15	20
Rated flow [l/s]		0.28	0.83	1.39	2.78	4.17	5.56
Flow range [m³/h]		0.5~2.4	1.2~4.4	2.5~8.5	5~14	8~24	10~29
Flow range [l/s]		0.14~0.67	0.33~1.22	0.69~2.36	1.39~3.89	2.22~6.67	2.78~8.06
Max. pressure [bar]		22	23	24	24	22	25
Motor power [kW]		0.37~2.2	0.37~3	0.37~5.5	0.75~11	1.1~15	1.1~18.5
Temp [˚C]		-15 ~ +120					
Max. efficiency [%]		48	58	70	72	73	73
CDM Pipelines	DIN flange	DN25	DN25	DN32	DN40	DN50	DN50
	Oval flange	G1	G1	G1¼	G1½		
CDMF Pipelines	DIN flange	DN25	DN25	DN32	DN40	DN50	DN50
	Cutting ferrule joint	DN32	DN32	DN32	DN50	DN50	DN50
	Pipe thread	R1¼	R1¼	R1¼	R2	R2	R2
	Oval flange	G1	G1	G1¼	G1½		

Description		CDM/CDMF						
Rated flow [m³/h]		32	42	65	85	120	150	200
Rated flow [l/s]		8.89	11.67	18.06	23.61	33.33	41.67	55.56
Flow range [m³/h]		16~40	25~55	30~80	50~110	60~150	80~180	100~240
Flow range [l/s]		4.44~11.11	6.94~15.28	8.33~22.22	13.89~30.56	16.67~41.67	22.22~50	27.78~66.67
Max. pressure [bar]		29	30	22	17	16	16	16
Motor power [kW]		1.5~30	3~45	4~45	5.5~45	11~75	11~75	18.5~110
Temp [˚C]		-15~+120						
Max. efficiency [%]		73	75	76	77	74	73	79
Pipelines	DIN flange	DN65	DN80	DN100	DN100	DN125	DN125	DN150

Summary

CDM/CDMF pumps are new generation, high efficiency, non-self-priming vertical multistage centrifugal pumps (Abbr. as pumps). It referred European standard, used entirely new industrial design. It is energy saving, low noise, environment friendly, compact design, beautiful shape, light, easy for service, high reliability.

Motor

Totally enclosed, fan cooled, 2 pole standard motor
IP class: IP55
Insulation class: F
Voltage: 50Hz:1×200-230/240V
3×200-220/346-380V
3×220-240/380-415V

Working conditions

Thin, clean, non-flammable, non-explosive, solid free, fiber free, physically and chemically water-like liquid.

Liquid temperature:
Normal temperature type: -15˚C to 70˚C
Hot water type:-15˚C to 120˚C
Ambient temperature:up to +40˚C
Altitude: up to 1000m

Application

CDM/CDMF pumps are designed for a variety of applications from the pumping of potable water to the pumping of industrial liquids. Applied for liquids of different temperature, different rated flow, different pressure range. CDM is suitable for non-corrosive liquid, CDMF is suitable for light corrosive liquid.

Boosting: Filtering and transferring water in water factories, delivering water in different zone, pressuring for major pipelines, boosting for high buildings.

Pressuring: Water circulating system, washing system, high pressure flushing system, fire-fighting system.

HVAC: Air condition system

Water treatment: Ultrafiltration system, R/O system, distillation system, separator, swimming pool.

Performance curve

Following conditions are suitable for performance curve below.

1.All curves are based on the measured values of 50Hz;constant motor speed 2900rpm or 2950rpm.

2.Curve tolerance in conformity with ISO9906:2012, Grade 3B.

3.Measurement is done with 20˚C air-free water, kinematic viscosity of 1mm^2/sec.

4.The operation of pump shall refer to the performance region indicated by the thickened curve to prevent overheating due to too small flow rate or overload of motor due to too large flow rate.

Model definition

CDM/CDMF 1,3,5,10,15&20

CDM F 10 - 2

- Stage
- Flow rated(m^3/h)
- F for stainless steel type ss304 or 316L, F omitted for cast iorn type
- Light vertical multistage centrifugal pump

CDM/CDMF 32,42,65,85,120&150

CDM F 32 - 3 - 2

- Number of small imperller
- Stage
- Flow rated(m^3/h)
- F for stainless steel type ss304 or 316L, F omitted for cast iorn type
- Light vertical multistage centrifugal pump

CDM/CDMF 200

CDM F 200 - 4 - 2A - B

- 1 Small impeller B
- 2 Small impeller A
- Stage
- Flow rated(m^3/h)
- F for stainless steel type ss304 or 316L, F omitted for cast iorn type
- Light vertical multistage centrifugal pump

Max.working perssure

Model	Max working(bar)
CDM/CDMF1,3,5,10,15,20 Flange, cutting ferrule, pipe thread	25
CDM/CDMF1,3,5,10 oval flange	16
CDM32	
32-1-1~32-8	16(30)
32-9-2~32-16	30
CDMF32	30
CDM42	
42-1-1~42-6-2	16(30)
42-6~42-9	25(30)
42-10-2~42-13-2	30
CDMF42	
42-1-1~42-9	16(25)
42-10-2~42-13-2	25
CDM65	
65-1-1~65-5-2	16(25)
65-5-1~65-8-1	25
CDM85	
85-1-1~85-4-2	16(25)
85-4~85-6	25
CDMF65,85	25
CDM/CDMF120,150,200	20
()Need to specify especially.	

Max ambient temperature, altitude above sea level

When pumps working in the condition of higher than 40˚C or higher than 1000m altitude, because the air density lessened, cooling performance is reduced, motor output power P_2 is reduced also. The motor power shall be enlarged in those working conditions.

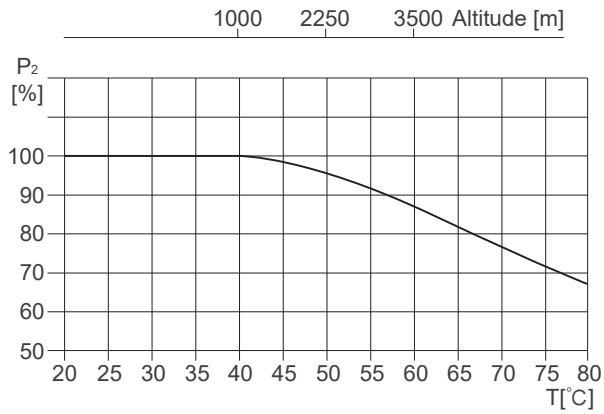

Min.inlet pressure

In case that the pressure in pump is lower than the steam pressure used to convey liquid, the cavitations will occur. To avoid cavitations, a minimum pressure at the inlet side of the pump shall be guaranteed. The maximum suction stroke can be calculated with following formula:

H=Pb×10.2-NPSH-Hf-Hv-Hs

pb = Barometric pressure in bar.

(Barometric pressure can be set to 1 bar).

In a closed system, Pb means system pressure [bar].

NPSH = Net Positive Suction Head [m].

(It can be read from the point of possible max. flow rate shown on NPSH curve.)

Hf =Pipe friction loss at the inlet[m].

Hv = Vapour pressure [m].

Hs = Safety margin = minimum 0.5 meters head.

If the "H" calculated is positive, the pump may run under the max. suction stroke H.

If the "H" calculated is negative, A head of minimum inlet pressure H is required.

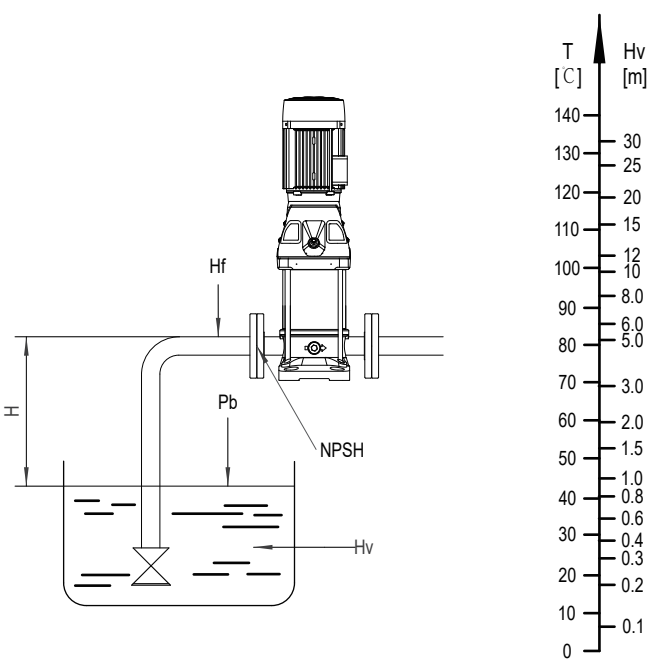

CDM/CDMF 1,3,5 Sectional drawing

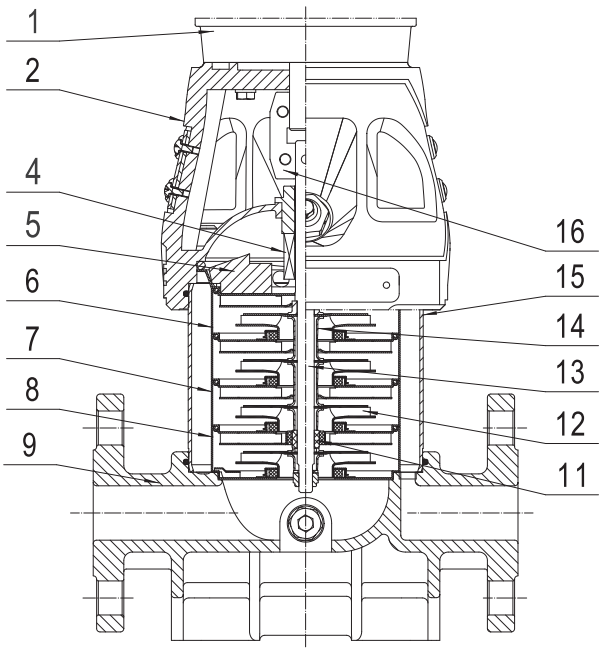

CDM

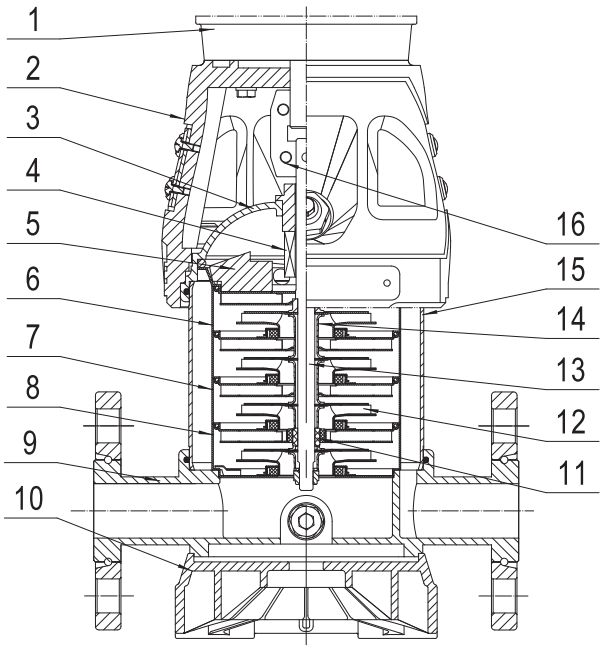

CDMF

CDM 1,3,5 Material list

Pos.	Name	Materials	AISI/ASTM
1	Motor		
2	Pump head	Cast iron	ASTM25B
4	Mechanical seal	Tungsten carbide /Carbon	
5	Top diffuser	Stainless steel	AISI304
6	Diffuser	Stainless steel	AISI304
7	Support diffuser	Stainless steel	AISI304
8	Inducer	Stainless steel	AISI304
9	Inlet & outlet chamber	Cast iron	ASTM25B
11	Bearing	Tungsten carbide	
12	Impeller	Stainless steel	AISI304
13	Shaft	Stainless steel	AISI304
14	Impeller sleeve	Stainless steel	AISI304
15	Cylinder	Stainless steel	AISI304
16	Coupling	Carbon steel/ Powder metallurgy	

Please check with us for other materials.

CDMF 1,3,5 Material list

Pos.	Name	Material	AISI/ASTM
1	Motor		
2	Pump head	Cast iron	ASTM25B
3	Lining	Stainless steel	AISI304
4	Mechanical seal	Tungsten carbide/ Carbon	
5	Top diffuser	Stainless steel	AISI304
6	Diffuser	Stainless steel	AISI304
7	Support diffuser	Stainless steel	AISI304
8	Inducer	Stainless steel	AISI304
9	Inlet & outlet chamber	Stainless steel	AISI304
10	Base plate	Cast aluminum	
11	Bearing	Tungsten carbide	
12	Impeller	Stainless steel	AISI304
13	Shaft	Stainless steel	AISI304
14	Impeller sleeve	Stainless steel	AISI304
15	Cylinder	Stainless steel	AISI304
16	Coupling	Carbon steel/ Powder metallurgy	

CDM/CDMF 10,15,20 Sectional drawing

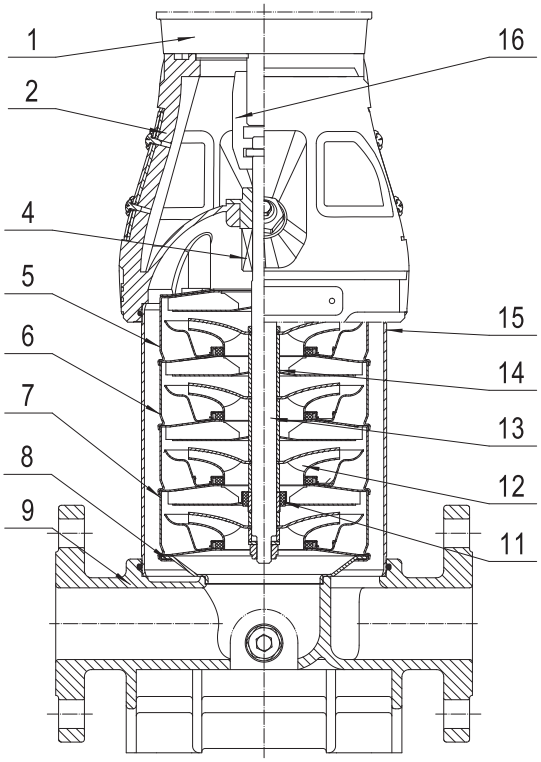

CDM

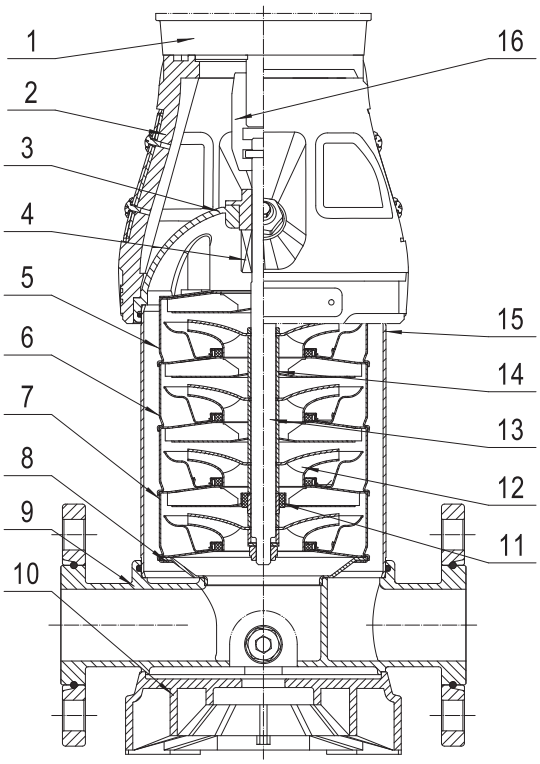

CDMF

CDM 10,15,20 Material list

Pos.	Name	Material	AISI/ASTM
1	Motor		
2	Pump head	Cast iron	ASTM25B
4	Mechanical seal	Tungsten carbide/ Carbon	
5	Top diffuser	Stainless steel	AISI304
6	Diffuser	Stainless steel	AISI304
7	Support diffuser	Stainless steel	AISI304
8	Inducer	Stainless steel	AISI304
9	Inlet & outlet chamber	Cast iron	ASTM25B
11	Bearing	Tungsten carbide	
12	Impeller	Stainless steel	AISI304
13	Shaft	Stainless steel	AISI304
14	Impeller sleeve	Stainless steel	AISI304
15	Cylinder	Stainless steel	AISI304
16	Coupling	Carbon steel/ Powder metallurgy	

Please check with us for other materials.

CDMF 10,15,20 Material list

Pos.	Name	Material	AISI/ASTM
1	Motor		
2	Pump head	Cast iron	ASTM25B
3	Lining	Stainless steel	AISI304
4	Mechanical seal	Tungsten carbide/ Carbon	
5	Top diffuser	Stainless steel	AISI304
6	Diffuser	Stainless steel	AISI304
7	Support diffuser	Stainless steel	AISI304
8	Inducer	Stainless steel	AISI304
9	Inlet & outlet chamber	Stainless steel	AISI304
10	Base plate	Cast aluminum	
11	Bearing	Tungsten carbide	
12	Impeller	Stainless steel	AISI304
13	Shaft	Stainless steel	AISI304
14	Impeller sleeve	Stainless steel	AISI304
15	Cylinder	Stainless steel	AISI304
16	Coupling	Carbon steel/ Powder metallurgy	

CDM/CDMF 32,42,65,85 Sectional drawing

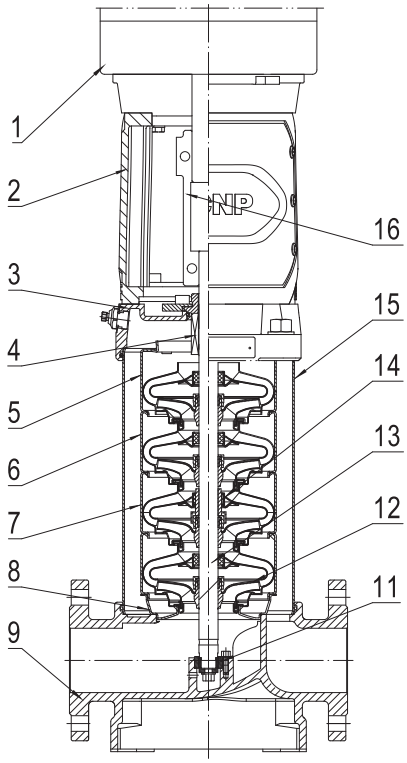

CDM

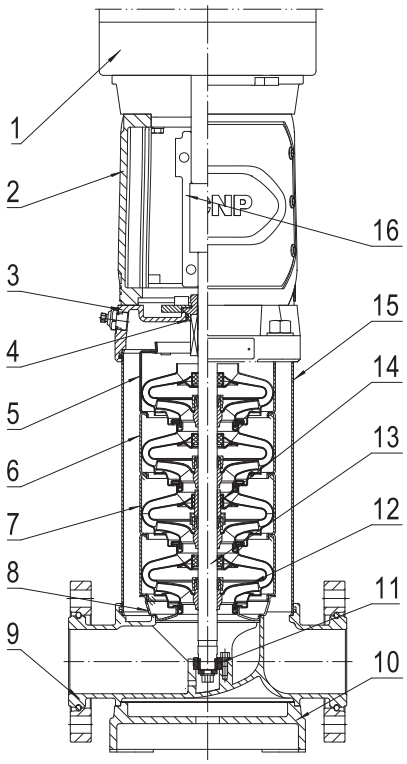

CDMF

CDM 32,42,65,85 Material list

Pos.	Name	Material	AISI/ASTM
1	Motor		
2	Bracket	Cast iron	ASTM25B
3	Pump head	Cast iron	ASTM25B
4	Mechanical seal	Tungsten carbide/ Carbon	
5	Top diffuser	Stainless steel	AISI304
6	Diffuser	Stainless steel	AISI304
7	Support diffuser	Stainless steel	AISI304
8	Inducer	Stainless steel	AISI304
9	Inlet & outlet chamber	Stainless steel	AISI304
11	Bottom bearing	Tungsten carbide	
12	Impeller	Stainless steel	AISI304
13	Shaft	Stainless steel	AISI304
14	Intermediate bearing	Tungsten carbide	
15	Cylinder	Stainless steel	AISI304
16	Coupling	Carbon steel/ Powder metallurgy	

Please check with us for other materials.

CDMF 32,42,65,85 Material list

Pos.	Name	Material	AISI/ASTM
1	Motor		
2	Bracket	Cast iron	ASTM25B
3	Pump head	Stainless steel	AISI304
4	Mechanical seal	Tungsten carbide/ Carbon	
5	Top diffuser	Stainless steel	AISI304
6	Diffuser	Stainless steel	AISI304
7	Support diffuser	Stainless steel	AISI304
8	Inducer	Stainless steel	AISI304
9	Inlet & outlet chamber	Stainless steel	AISI304
10	Base plate	Cast iron	ASTM25B
11	Bottom bearing	Tungsten carbide	
12	Impeller	Stainless steel	AISI304
13	Shaft	Stainless steel	AISI304
14	Intermediate bearing	Tungsten carbide	
15	Cylinder	Stainless steel	AISI304
16	Coupling	Carbon steel/ Powder metallurgy	

CDM/CDMF 120,150,200 Sectional drawing

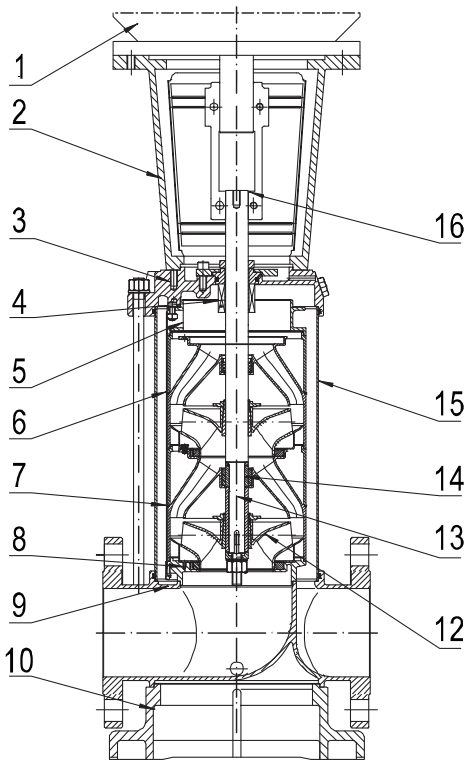

CDM

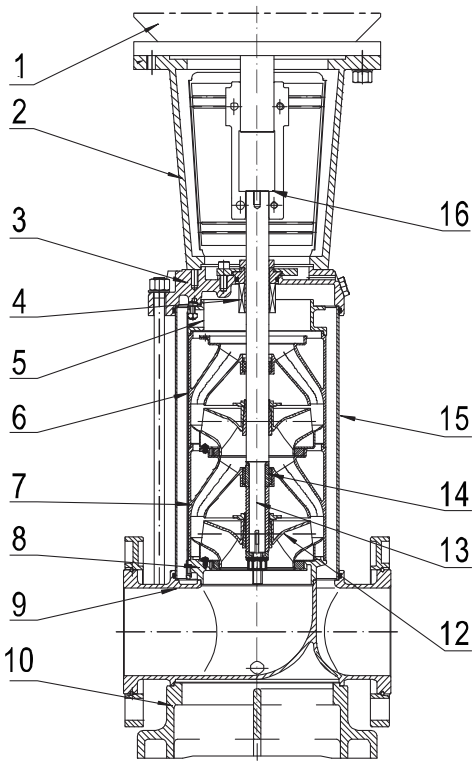

CDMF

CDM 120,150,200 Material list

Pos.	Name	Material	AISI/ASTM
1	Motor		
2	Bracket	Cast iron	ASTM25B
3	Pump head	Cast iron	ASTM25B
4	Mechanical seal	Tungsten carbide/ Carbon	
5	Discharge	Stainless steel	AISI304
6	Diffuser	Stainless steel	AISI304
7	Support diffuser	Stainless steel	AISI304
8	Inducer	Stainless steel	AISI304
9	Inlet & outlet chamber	Stainless steel	ASTM25B
10	Base plate	Cast iron	ASTM25B
12	Impeller	Stainless steel	AISI304
13	Shaft	Stainless steel	AISI304
14	bearing	Tungsten carbide	
15	Cylinder	Stainless steel	AISI304
16	Coupling	Carbon steel/ Powder metallurgy	

Please check with us for other materials.
CDM200 series has no NO.10

CDMF 120,150,200 Material list

Pos.	Name	Material	AISI/ASTM
1	Motor		
2	Bracket	Cast iron	ASTM25B
3	Pump head	Stainless steel	AISI304
4	Mechanical seal	Tungsten carbide/ Carbon	
5	Discharge	Stainless steel	AISI304
6	Diffuser	Stainless steel	AISI304
7	Support diffuser	Stainless steel	AISI304
8	Inducer	Stainless steel	AISI304
9	Inlet & outlet chamber	Stainless steel	AISI304
10	Base plate	Cast iron	ASTM25B
12	Impeller	Stainless steel	AISI304
13	Shaft	Stainless steel	AISI304
14	bearing	Tungsten carbide	
15	Cylinder	Stainless steel	AISI304
16	Coupling	Carbon steel/ Powder metallurgy	

CDM/CDMF 1 Performance curve

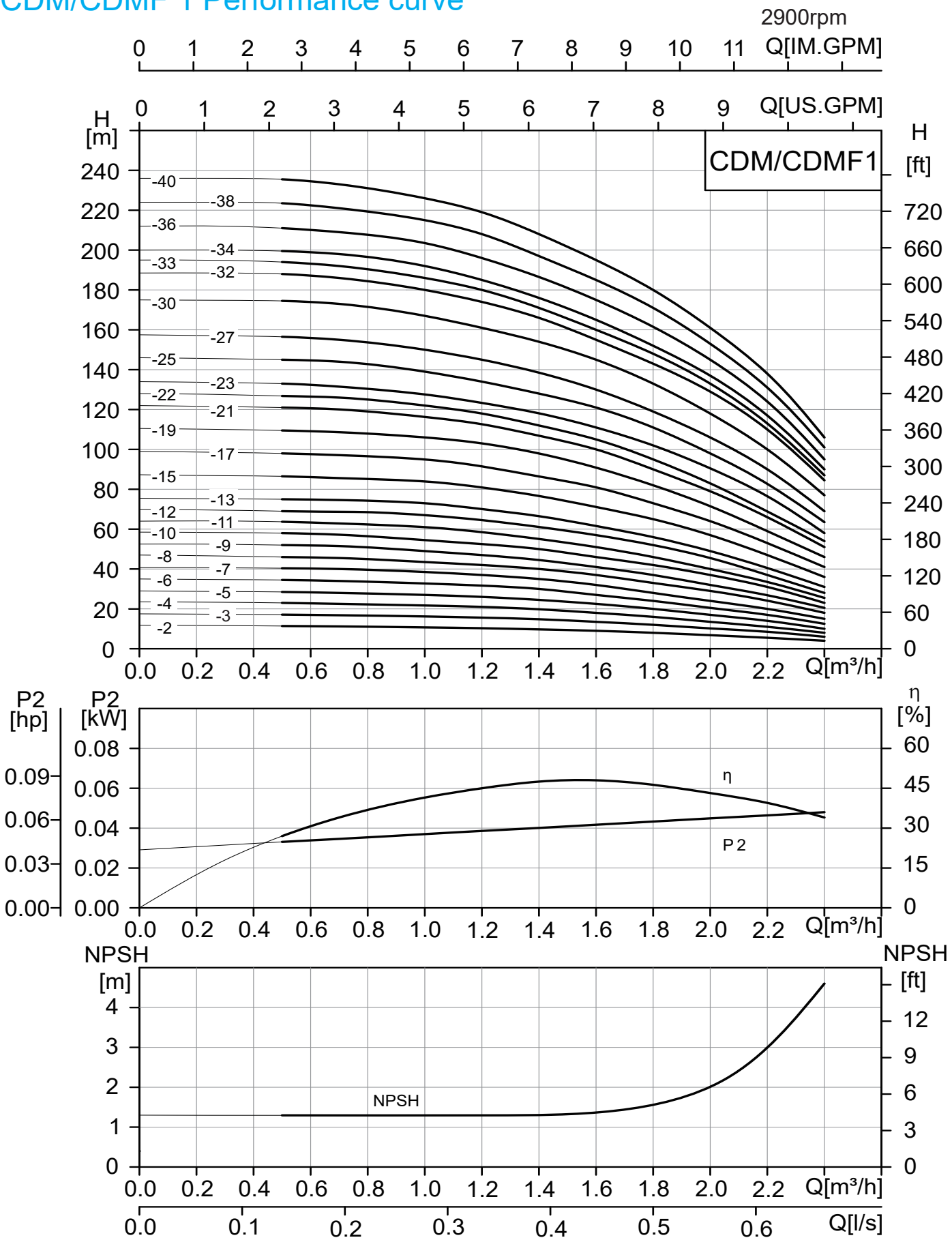

CDM/CDMF 1 Performance table

Model	Motor		Q (m³/h)	0	0.5	0.7	1	1.2	1.4	1.6	1.8	2	2.2	2.4
	(kW)	(hp)												
1-2	0.37	0.5	H (m)	11.8	11.5	11.2	10.5	10.3	9.7	9	8	6.8	5.5	4
1-3	0.37	0.5		17.5	17	16.8	16	15.6	14.8	13.5	12	10	8.5	6
1-4	0.37	0.5		23.5	23	22.5	21.5	21	19.8	18	16	13.5	11	8
1-5	0.37	0.5		29	28.5	28	27	26	24.5	22.5	20	17	14	10
1-6	0.37	0.5		35	34.5	34	32.5	31.5	30	27	24	20.5	17	12.5
1-7	0.37	0.5		41	40.5	40	39	37	35	32	28	24	20	15
1-8	0.55	0.75		47	46	45.5	43.5	42	40	37	33	29	24.5	18
1-9	0.55	0.75		52.5	52	51.5	49	47	44.5	41	37	32	27	20.5
1-10	0.55	0.75		58.5	58	57	55	52.5	50	46	42	37	31	23
1-11	0.55	0.75		64	63.5	63	61	58.5	55	51	46	40	33.5	25.5
1-12	0.75	1		70	69	68.5	67	64.5	61	57	52	45.5	37	28
1-13	0.75	1		75.5	75	74.5	73	70	66.5	61.5	56	49	40.5	31
1-15	0.75	1		87.5	86.5	85.5	84	81	76.5	71	65	57	47	36
1-17	1.1	1.5		99	98	97	95	91.5	86.5	81	73	64	53	41
1-19	1.1	1.5		110	109	108	106	103	98	91	82	72	59	46
1-21	1.1	1.5		122	121	120	117	113	107	100	90	78	65	50
1-22	1.1	1.5		128	127	126	122	118	112	105	95	83	69	54
1-23	1.5	2		134	133	132	128	123	118	111	102	90.5	76.5	58
1-25	1.5	2		146	145	144	139	134	128	121	111	98	83	63
1-27	1.5	2		158	157	155	150	145	138	130	119	106	90	69
1-30	1.5	2		175	174	172	167	161	154	145	133	118	100	77
1-32	2.2	3		189	188	186	180	174	166	155	143	129	110	85
1-33	2.2	3		195	194	192	186	180	171	160	148	133	113	87
1-34	2.2	3		200	199	198	192	185	176	165	152	137	117	90
1-36	2.2	3		212	211	209	203	196	186	175	161	145	124	95
1-38	2.2	3		225	224	221	215	208	197	185	171	153	131	101
1-40	2.2	3		237	236	233	226	219	208	195	180	161	138	106

CDM/CDMF 3 Performance curve

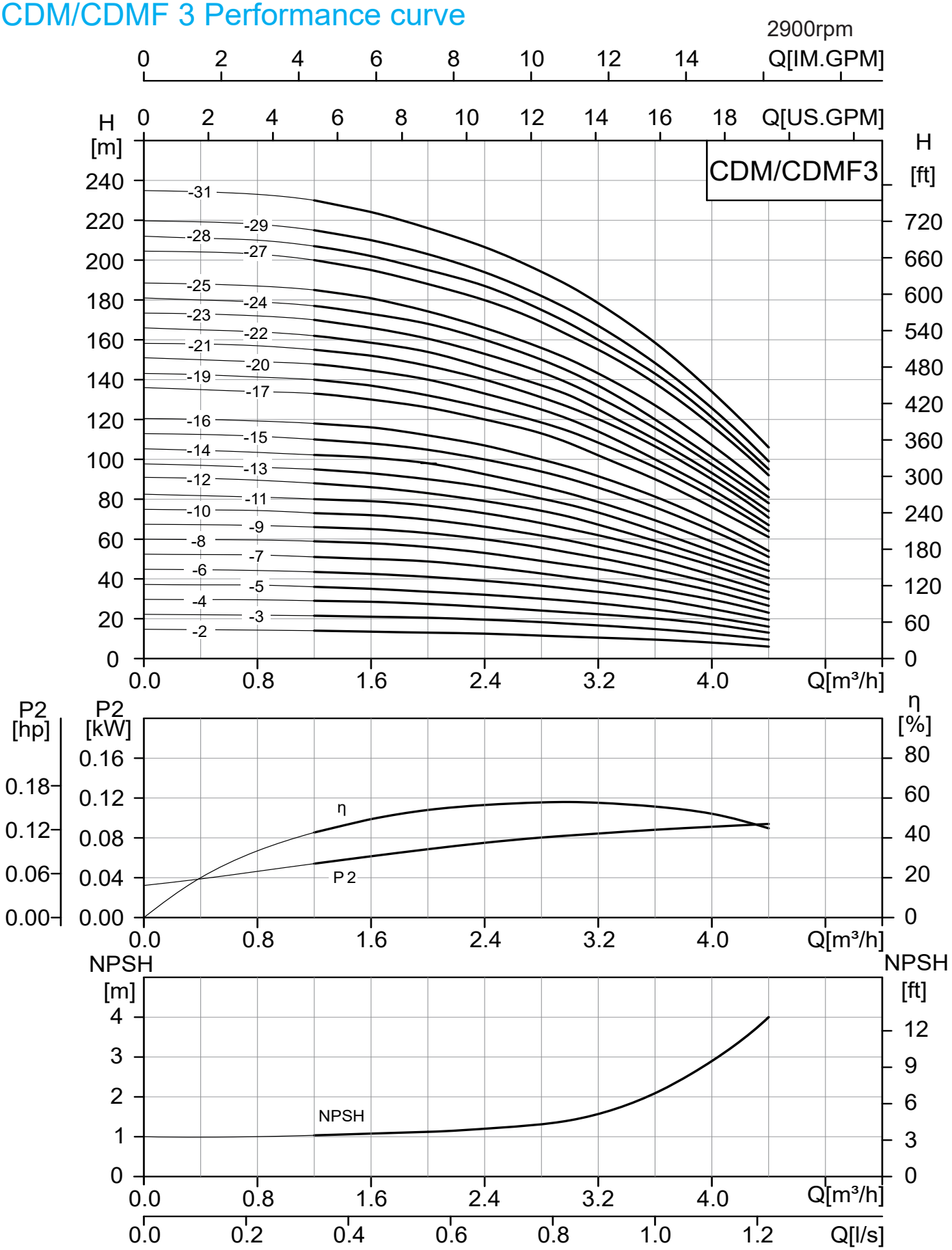

CDM/CDMF 3 Performance table

Model	Motor		Q (m³/h)	0	1.2	1.6	2	2.4	2.8	3	3.2	3.6	4	4.4
	(kW)	(hp)												
3-2	0.37	0.5	H (m)	14.7	14	13.5	13	12.5	11.5	11	10.5	9.5	8	6
3-3	0.37	0.5		22.2	21.5	21	20.5	19.5	18	17	16.5	15	12.5	9.5
3-4	0.37	0.5		29.7	29	28.5	27.5	26	24	23	22	20	17	13
3-5	0.55	0.75		37.2	36	35	33.5	32	30	29	28	25	21	16
3-6	0.55	0.75		45	43.5	42.5	41	39	36.5	35	33.5	30	25	19.5
3-7	0.75	1		52.5	51	50	49	46	43	41	39.5	35	30	23
3-8	0.75	1		60	58.5	58	56	53	49	47	45	40	34	26.5
3-9	1.1	1.5		67.5	66	65	63	60	56	53	51	45	38	30
3-10	1.1	1.5		75	73	72	70	66	61	59	56	50	42	33.5
3-11	1.1	1.5		82.5	80	79	77	73	68	65	62	55	47	37
3-12	1.1	1.5		90	88	86	83	79	74	71	67	59	50	40.5
3-13	1.5	2		98	95	93	90	86	80	77	73	64	54	44
3-14	1.5	2		105	102	101	98	92.5	86	83	78	69	58	47
3-15	1.5	2		113	110	108	105	100	94	90	86	76	64	51
3-16	1.5	2		120	118	116	112	107	100	96	92	81	69	54
3-18	2.2	3		136	133	130	126	120	113	108	102	90	76	61
3-19	2.2	3		143	140	137	132	126	119	114	108	96	82	64
3-20	2.2	3		151	148	144	140	133	125	120	114	100	85	67
3-21	2.2	3		158	155	152	147	140	131	126	120	106	90	71
3-22	2.2	3		166	162	158	154	146	137	132	125	110	93	74
3-23	2.2	3		173	170	166	161	153	144	138	131	115	97	78
3-24	2.2	3		181	177	173	168	160	150	144	137	120	101	81
3-25	3	4		188	185	181	175	166	156	150	142	125	105	85
3-27	3	4		204	200	195	188	180	169	162	155	138	117	92
3-28	3	4		212	207	202	195	187	175	168	160	143	121	95
3-29	3	4		220	215	210	203	194	182	175	167	148	126	99
3-31	3	4		235	230	224	216	207	194	187	178	159	134	106

CDM/CDMF 5 Performance curve

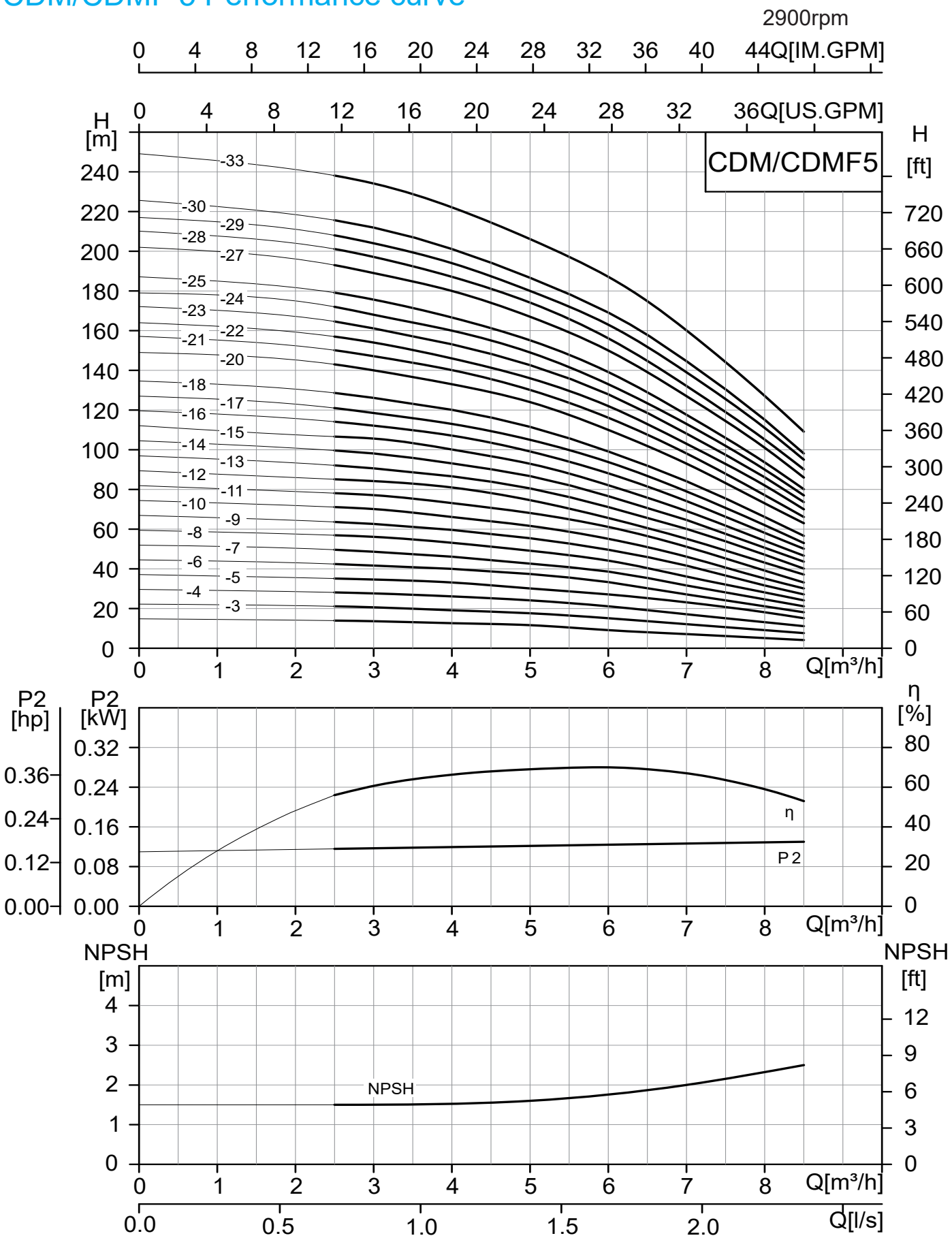

CDM/CDMF 5 Performance table

Model	Motor (kW)	Motor (hp)	Q (m³/h)	0	2.5	3	4	5	6	7	8	8.5
5-2	0.37	0.5	H (m)	14.7	13.5	13.3	12.5	11.5	9	7	5	4
5-3	0.55	0.75		22.1	21	20.5	19	17.5	15	12	9	7.5
5-4	0.55	0.75		29.5	28	27.5	26	24	21	17	13	11
5-5	0.75	1		37	35	34.5	33	30	27	23	18	15
5-6	1.1	1.5		44.5	42	41.5	40	37	33	27	21	18
5-7	1.1	1.5		52	49.5	48.5	46	42.5	38.5	31.5	24.5	21
5-8	1.1	1.5		59	57	56	53	49	44	36	28	24
5-9	1.5	2		67	64	63	60	55	49.5	41.5	31.5	27
5-10	1.5	2		74.5	71	70	66	62	55	46	35	30
5-11	1.5	2		82	78	77	73	68	61	51	39	33
5-12	2.2	3		89.5	85	84	81	74.5	66	55	43	37
5-13	2.2	3		97	92	91	87	80	71	60	47	40
5-14	2.2	3		104	100	98	93	87	77	65	51	43.5
5-15	2.2	3		112	107	106	100	93	82	69	54	46.5
5-16	2.2	3		119	114	112	107	99	88	74	58	50
5-17	3	4		127	121	118.5	113	105	94	79	62	53
5-18	3	4		134	128	126	120	111	99	84	66	56
5-20	3	4		149	143	140	133	124	110	93	73	63
5-21	3	4		157	150	147	140	130	116	98	77	66
5-22	4	5.5		164	157	154	146	136	122	103	82	70
5-23	4	5.5		172	165	161	153	142	128	108	86	74
5-24	4	5.5		179	172	168	160	149	133	113	90	77
5-25	4	5.5		187	179	175	167	155	139	117	93	80
5-27	4	5.5		202	193	189	180	168	150	127	101	86
5-28	4	5.5		210	201	197	187	174	156	132	105	90
5-29	5.5	7.5		217	208	204	194	180	163	139	111	95
5-30	5.5	7.5		225	216	212	201	186	169	144	115	98
5-33	5.5	7.5		249	238	234	222	206	187	160	127	109

CDM/CDMF 10 Performance curve

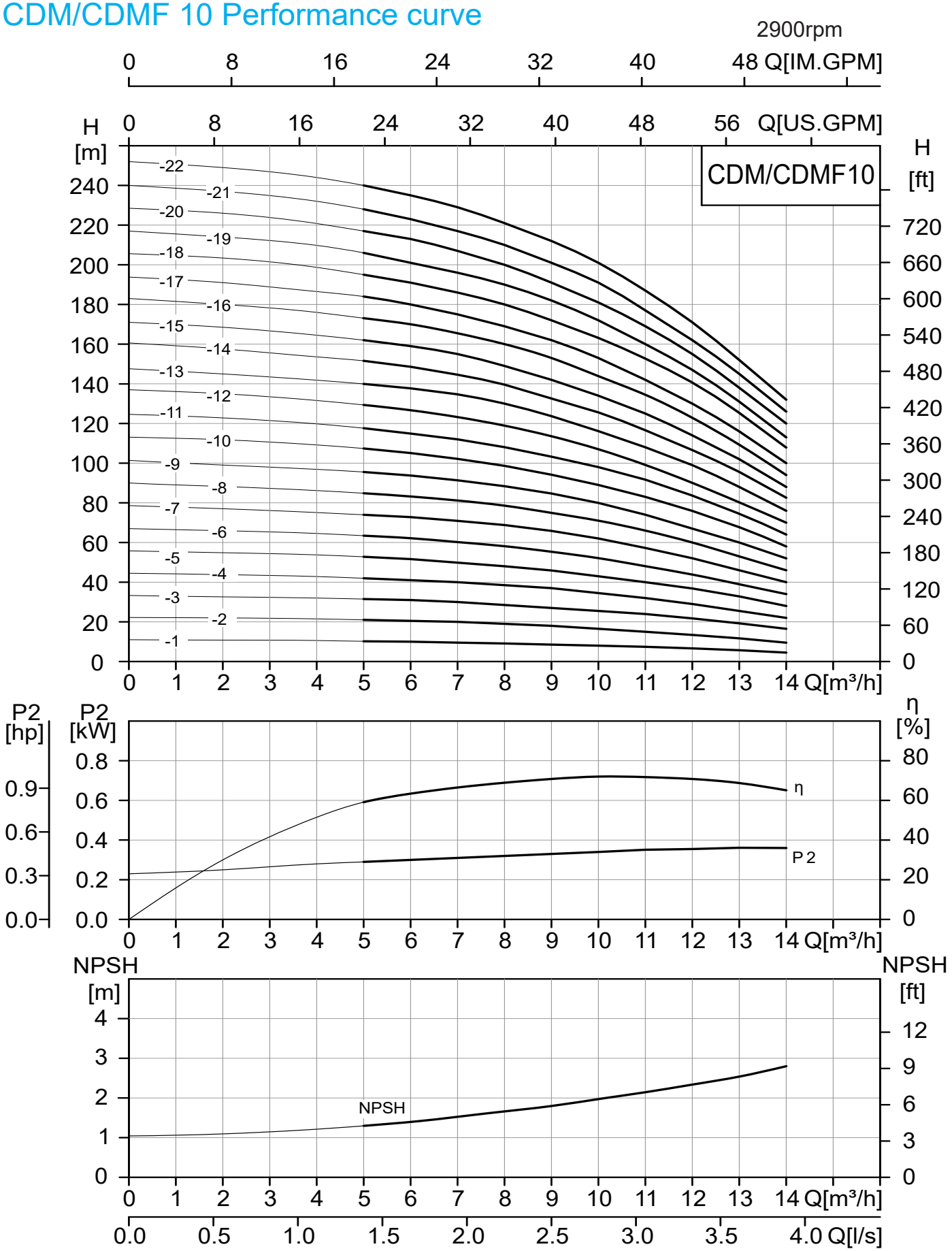

CDM/CDMF 10 Performance table

Model	Motor		Q (m³/h)	0	5	6	8	10	12	14
	(kW)	(hp)								
10-1	0.75	1	H (m)	11	10.2	10	9	8	7	4.5
10-2	0.75	1		22.2	21	20.5	19	16.5	13.5	9.5
10-3	1.1	1.5		33.3	31.5	31	28.5	25.5	22	16.5
10-4	1.5	2		44.5	42	41	38	34	29	22
10-5	2.2	3		56	52.5	51	48	43	37	28
10-6	2.2	3		67	63	62	58	52	44	34
10-7	3	4		78.5	74	73	69	62	52	40
10-8	3	4		90	85	84	79	71	60	46
10-9	4	5.5		101.5	96	94	89	80	67	52
10-10	4	5.5		113	107	105	98	89	76	58
10-11	4	5.5		124	118	115	108	98	84	64
10-12	4.5			137	129	127	119	107	91	70
10-13	5.5	7.5		147	140	138	130	116	99	76
10-14	5.5	7.5		160	151	148	139	125	106	82
10-15	5.5	7.5		171	162	159	149	134	114	88
10-16	7.5	10		183	173	170	159	144	123	94
10-17	7.5	10		194	184	180	169	153	130	100
10-18	7.5	10		205	195	191	180	163	141	108
10-19	7.5	10		217	206	201	190	172	147	113
10-20	7.5	10		228	217	213	200	181	155	120
10-21	7.5	10		240	228	223	210	191	162	126
10-22	11	15		250	240	235	221	201	171	132

CDM/CDMF 15 Performance curve

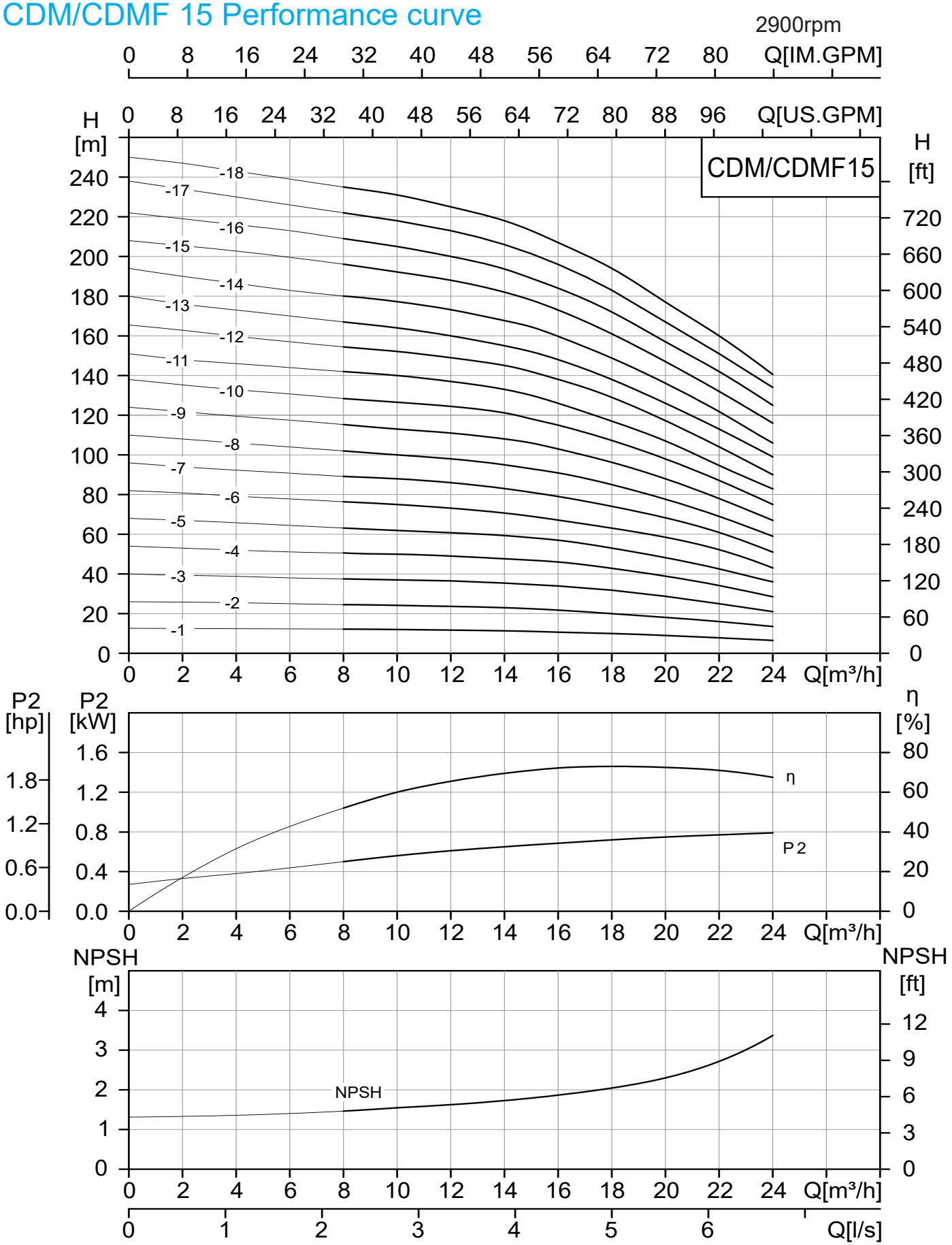

CDM/CDMF 15 Performance table

Model	Motor		Q (m³/h)	0	8	10	12	14	15	16	18	20	22	24
	(kW)	(hp)												
15-1	1.1	1.5	H (m)	12.6	12.2	12	11.8	11.5	11	10.5	10	9	8	6.5
15-2	2.2	3		26	24.5	24	23.5	23	22.5	21.5	20	18	16	13.5
15-3	3	4		40	37.5	37	36.5	35.5	34.5	34	32	29	25	21
15-4	4	5.5		54	50.5	50	49	47.5	47	46	43	39	34	28.5
15-5	4	5.5		68	63	62	61	59	58	57	53	48	42.5	36
15-6	5.5	7.5		82	76	75	73	71	69	67	63	58	52	43
15-7	5.5	7.5		96	89	88	86	83	81	79	74	68	61	51
15-8	7.5	10		110	102	100	98	95	93	91	85	78	69	59
15-9	7.5	10		124	115	113	111	108	106	103	96	88	78	67
15-10	11	15		138	128	126	124	121	118	115	107	98	87	75
15-11	11	15		151	142	140	137	133	130	126	117	107	95	83
15-12	11	15		166	154	152	149	145	142	138	129	117	104	90
15-13	11	15		180	167	164	160	155	152	148	138	126	113	99
15-14	11	15		194	180	177	173	168	165	160	149	136	122	106
15-15	15	20		208	196	192	188	182	178	173	161	147	132	116
15-16	15	20		222	209	205	200	194	189	184	172	157	142	125
15-17	15	20		236	222	218	213	206	201	196	183	167	151	132
15-18	15	20		250	235	231	225	218	213	207	194	177	160	141

CDM/CDMF 20 Performance curve

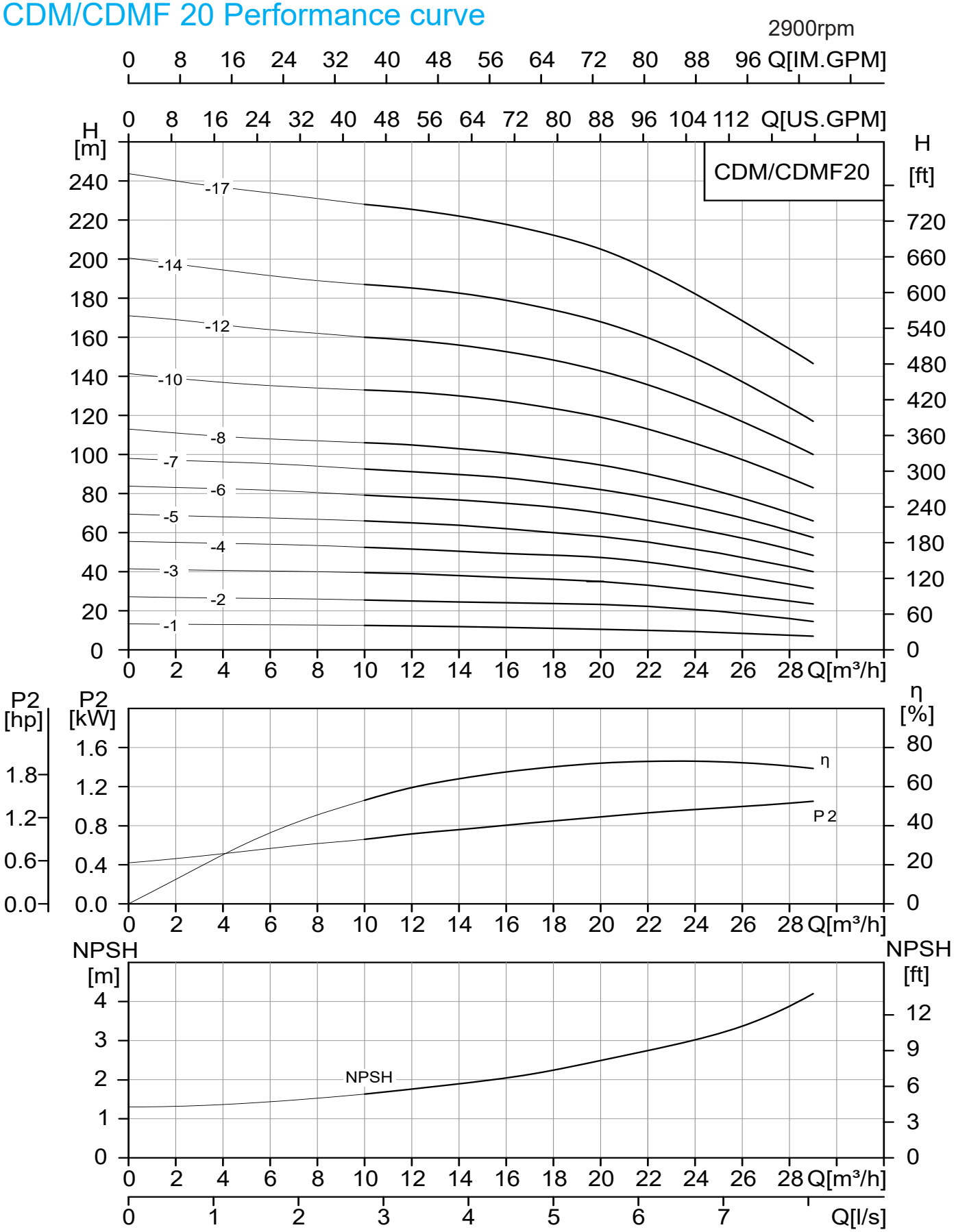

CDM/CDMF 20 Performance table

Model	Motor		Q (m³/h)	0	10	12	14	16	18	20	22	24	26	28	29
	(kW)	(hp)													
20-1	1.1	1.5	H (m)	13.3	12.5	12.3	12	11.5	11	10.5	10	9.5	9	8	7
20-2	2.2	3		27.2	25.5	25	24.5	24	23	22	21	20	18	16	14.5
20-3	4	5.5		41.5	39.5	39	38	37	36	34.5	33	31	28	25	23.5
20-4	5.5	7.5		55.5	52.5	51	50	49	48	46	44	41	37	33	31.5
20-5	5.5	7.5		69.5	66	65	64	62	60	58	55	51	47	42	40
20-6	7.5	10		83.8	79	78	77	75	73	70	66	62	58	52	48
20-7	7.5	10		98	92.5	91	90	88	85	82	78	73	68	61	57.5
20-8	11	15		113	106	105	103	101	98	95	90	84	77	70	66
20-10	11	15		141	133	132	130	127	123	119	113	106	97	88	83
20-12	15	20		171	160	158	156	153	149	143	137	127	117	106	100
20-14	15	20		201	187	185	183	179	174	168	160	149	137	124	117
20-17	18.5	25		244	228	225	222	218	212	205	195	182	168	154	147

CDM/CDMF 32 Performance curve

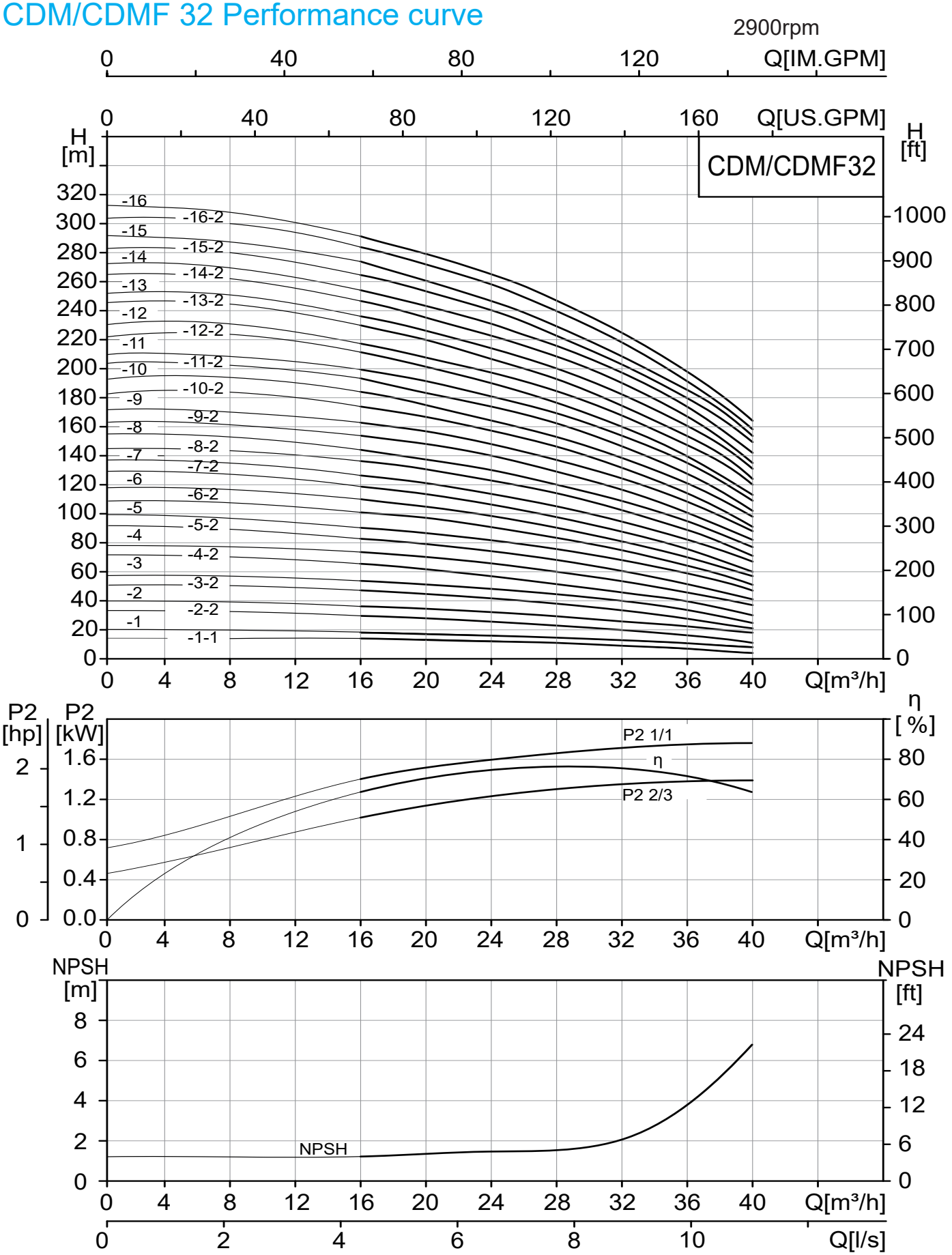

CDM/CDMF 32 Performance table

Model	Motor (kW)	Motor (hp)	Q (m³/h)	0	16	20	24	28	32	36	40
32-1-1	1.5	2	H (m)	15	14	13	12	11	9	7	4
32-1	2.2	3		20	18	17	15	14	13	11	8
32-2-2	3	4		33	29	28	26	23	20	16	11
32-2	4	5.5		40	36	34	32	29	27	23	18
32-3-2	5.5	7.5		50	47	44	41	38	33	28	21
32-3	5.5	7.5		57	54	51	48	44	40	35	27
32-4-2	7.5	10		72	65	62	58	53	46	40	30
32-4	7.5	10		78	72	69	65	59	53	47	37
32-5-2	11	15		92	83	79	74	68	60	52	41
32-5	11	15		99	90	86	81	74	67	59	47
32-6-2	11	15		108	101	97	90	83	74	65	51
32-6	11	15		118	108	104	97	90	81	72	57
32-7-2	15	20		129	119	114	107	98	88	78	60
32-7	15	20		138	126	121	113	105	95	85	67
32-8-2	15	20		145	136	131	123	114	102	90	71
32-8	15	20		154	144	138	130	120	109	97	77
32-9-2	18.5	25		163	154	148	140	129	117	102	80
32-9	18.5	25		172	162	156	147	136	124	109	88
32-10-2	18.5	25		182	175	166	157	146	131	115	91
32-10	18.5	25		193	182	173	164	152	138	122	98
32-11-2	22	30		204	193	184	173	164	146	128	102
32-11	22	30		210	200	191	180	168	153	135	109
32-12-2	22	30		222	211	201	189	178	160	140	113
32-12	22	30		231	218	208	196	184	167	147	120
32-13-2	30	40		246	230	218	206	193	174	153	124
32-13	30	40		253	237	225	213	200	181	160	131
32-14-2	30	40		265	247	235	222	210	189	165	135
32-14	30	40		273	255	242	229	216	196	172	142
32-15-2	30	40		284	266	253	239	224	203	178	145
32-15	30	40		292	274	260	246	231	210	185	152
32-16-2	30	40		304	284	270	255	240	218	190	156
32-16	30	40		312	292	277	262	246	225	197	163

CDM/CDMF 42 Performance curve

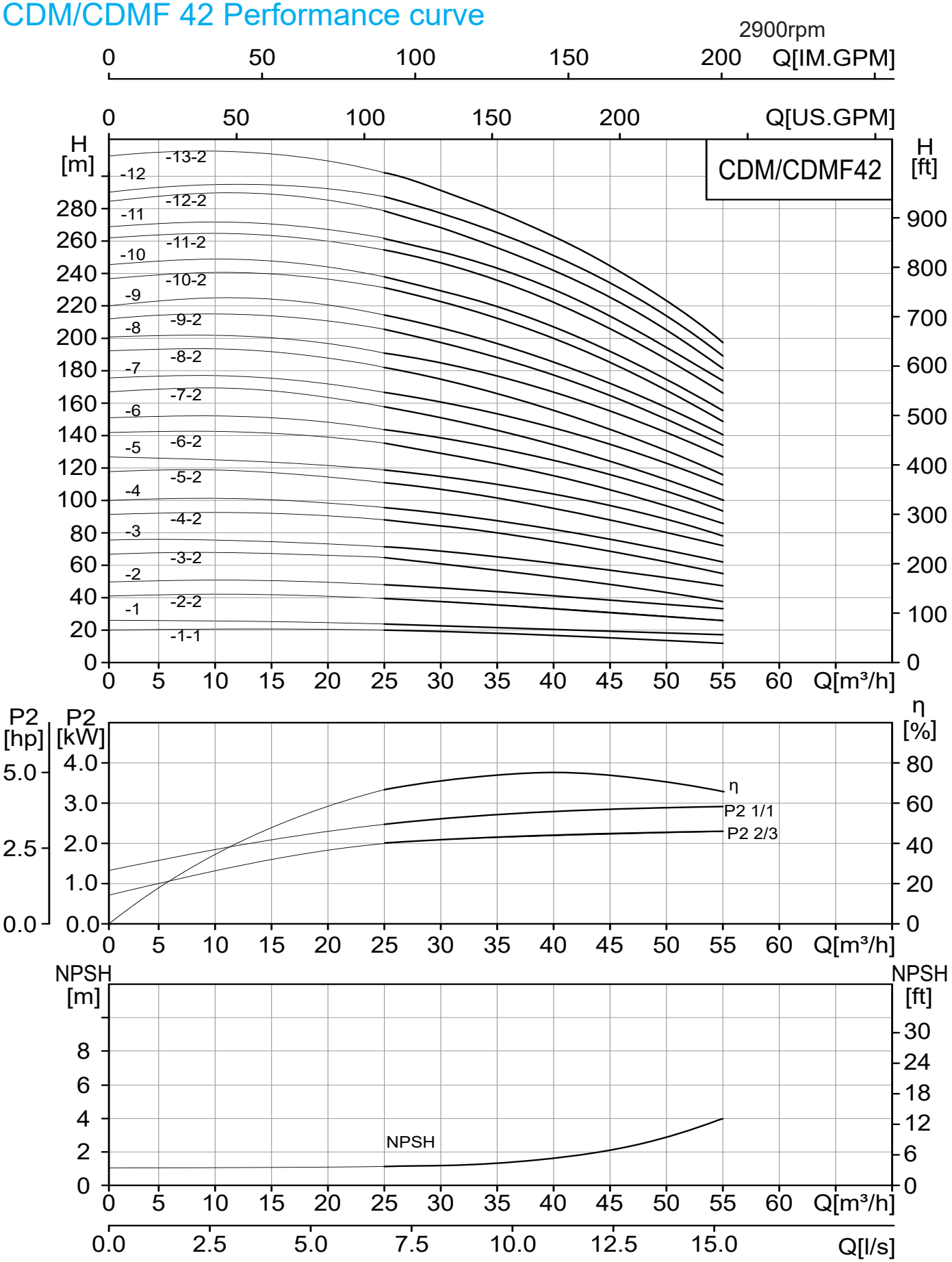

CDM/CDMF 42 Performance table

Model	Motor (kW)	Motor (hp)	Q (m³/h)	0	25	30	35	40	42	45	50	55
42-1-1	3.0	4	H (m)	20	20	19	18	17	16	15	13	11
42-1	4.0	5.5		27	24	23	22	21	20	19	18	16
42-2-2	5.5	7.5		42	40	38	36	33	32	30	27	23
42-2	7.5	10		50	48	46	44	42	41	39	35	31
42-3-2	11	15		66	63	61	58	54	52	50	44	38
42-3	11	15		75	71	69	66	63	61	58	53	47
42-4-2	15	20		92	87	84	80	75	73	69	62	54
42-4	15	20		100	95	92	88	84	81	78	71	62
42-5-2	18.5	25		118	111	107	102	96	93	88	80	69
42-5	18.5	25		125	119	115	110	105	101	97	88	78
42-6-2	22	30		142	135	130	124	117	113	108	97	85
42-6	22	30		150	143	138	132	125	122	116	106	93
42-7-2	30	40		166	158	152	146	138	134	127	115	100
42-7	30	40		175	166	161	154	146	142	135	124	109
42-8-2	30	40		192	182	175	168	159	154	146	133	116
42-8	30	40		202	190	184	176	167	162	154	141	124
42-9-2	30	40		212	205	198	190	180	174	166	150	132
42-9	37	50		220	214	207	198	188	183	174	159	140
42-10-2	37	50		237	230	221	212	200	194	185	168	147
42-10	37	50		245	238	230	220	209	203	193	177	155
42-11-2	45	60		262	255	246	236	223	217	206	188	165
42-11	45	60		269	263	255	244	232	225	214	196	173
42-12-2	45	60		284	280	270	259	245	238	226	206	181
42-12	45	60		290	289	280	268	255	247	236	216	190
42-13-2	45	60		312	305	294	282	267	259	247	225	198

CDM/CDMF 65 Performance curve

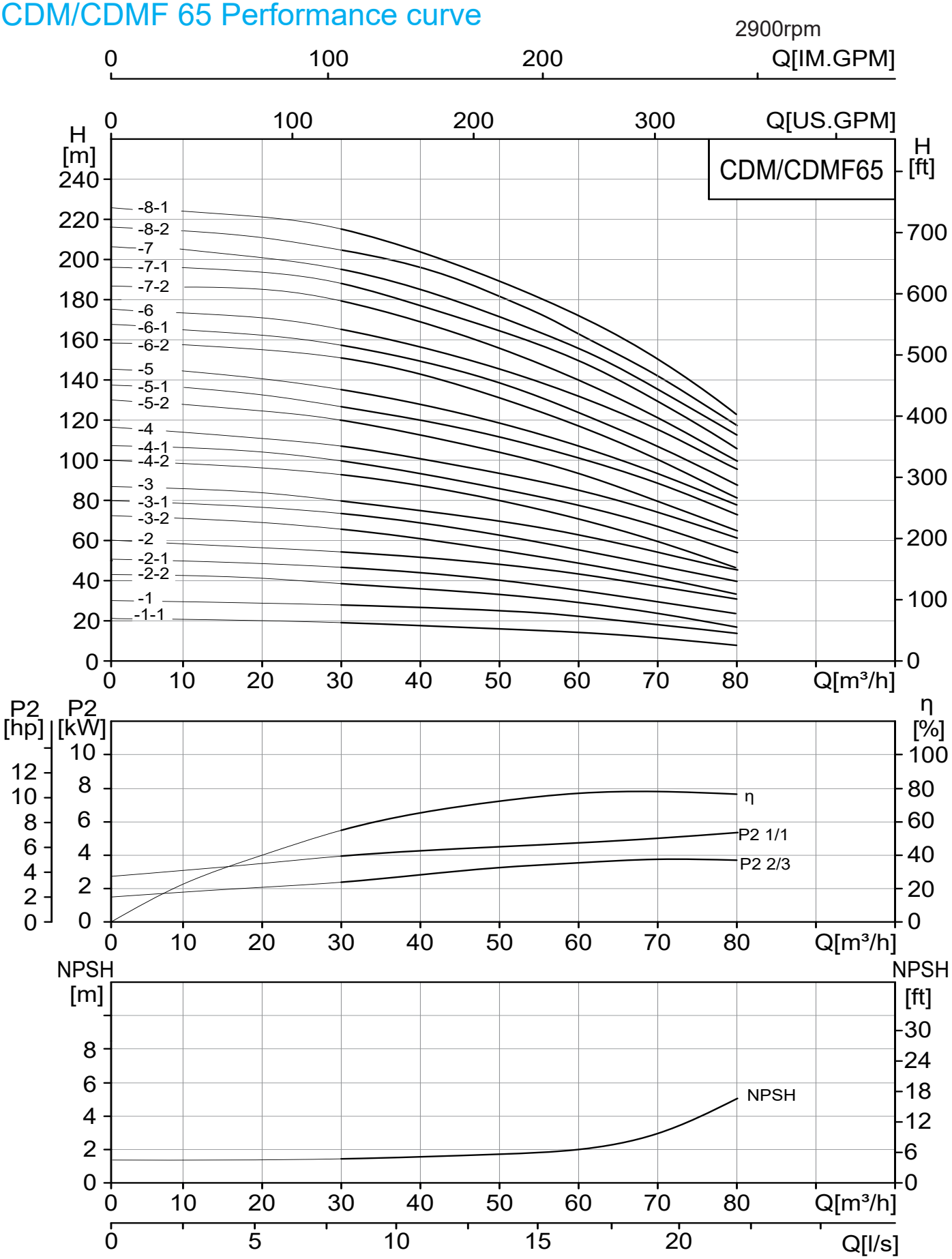

CDM/CDMF 65 Performance table

Model	Motor		Q (m³/h)	0	30	40	50	60	65	70	80
	(kW)	(hp)									
65-1-1	4	5.5	H (m)	20	19	18	16	14	13	11	8
65-1	5.5	7.5		30	27	25	23	21	20	18	15
65-2-2	7.5	10		42	39	36	33	29	26	23	17
65-2-1	11	15		50	46	44	40	36	33	30	24
65-2	11	15		60	53	51	47	43	40	37	30
65-3-2	15	20		73	66	62	56	50	46	41	32
65-3-1	15	20		80	73	69	63	57	53	48	39
65-3	18.5	25		87	80	76	70	64	60	55	46
65-4-2	18.5	25		98	92	87	80	71	66	60	47
65-4-1	22	30		107	100	94	87	78	73	67	54
65-4	22	30		116	107	101	94	85	80	74	61
65-5-2	30	40		130	121	114	105	95	88	80	64
65-5-1	30	40		138	128	121	112	102	95	87	71
65-5	30	40		146	136	129	119	109	102	94	78
65-6-2	30	40		158	150	142	131	118	110	101	81
65-6-1	37	50		166	157	149	138	125	117	108	88
65-6	37	50		175	164	156	145	132	124	115	95
65-7-2	37	50		186	179	169	156	141	132	121	99
65-7-1	37	50		196	186	176	163	148	139	128	106
65-7	45	60		205	193	183	170	155	146	135	112
65-8-2	45	60		216	207	196	182	164	154	142	116
65-8-1	45	60		225	215	203	189	171	161	149	123

CDM/CDMF 85 Performance curve

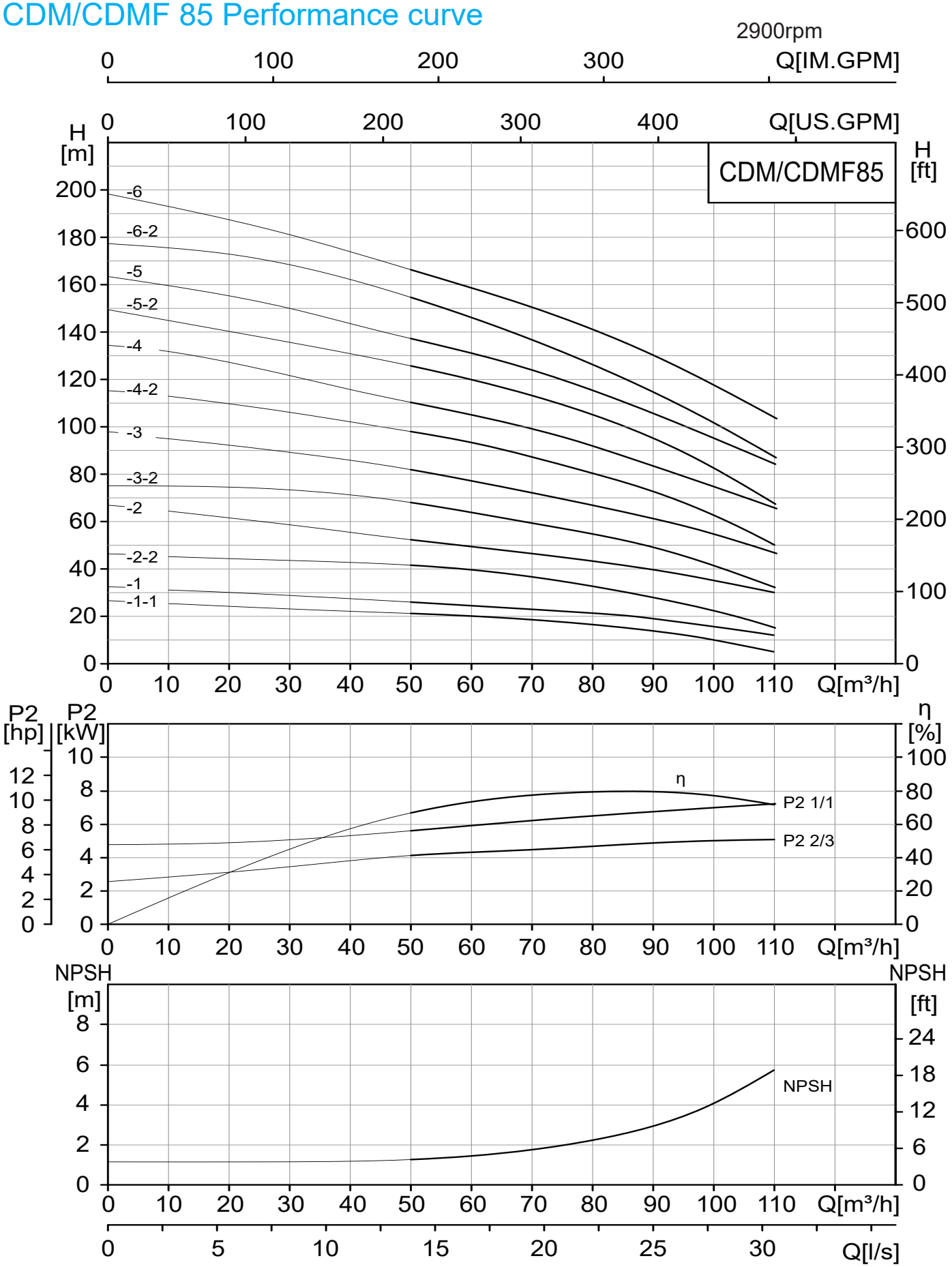

CDM/CDMF 85 Performance table

Model	Motor		Q (m³/h)	0	50	60	70	80	85	90	100	110
	(kW)	(hp)										
85-1-1	5.5	7.5	H (m)	26	22	19	17	16	14	13	10	6
85-1	7.5	10		33	25	24	22	21	20	19	16	12
85-2-2	11	15		47	41	39	36	32	30	28	22	15
85-2	15	20		67	53	50	47	44	41	40	36	30
85-3-2	18.5	25		75	68	65	60	55	52	49	41	32
85-3	22	30		98	81	77	72	67	64	62	55	48
85-4-2	30	40		115	98	93	87	80	75	72	62	50
85-4	30	40		134	110	105	100	92	86	84	76	66
85-5-2	37	50		150	126	120	113	104	98	93	81	68
85-5	37	50		164	139	131	124	115	110	106	94	83
85-6-2	45	60		177	155	148	139	129	122	117	102	86
85-6	45	60		197	168	160	150	141	134	130	117	103

CDM/CDMF 120 Performance curve

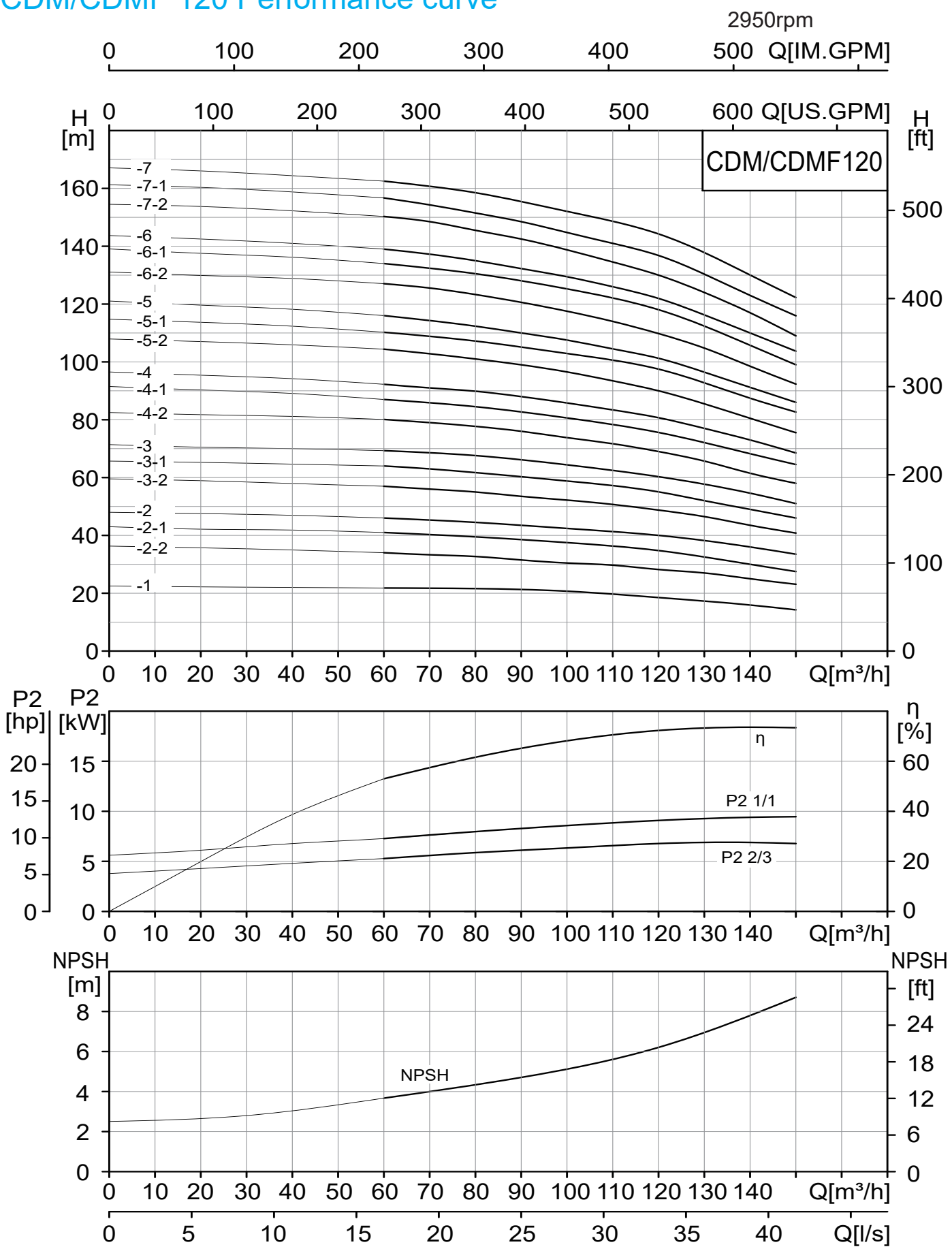

CDM/CDMF 120 Performance table

Model	Motor		Q (m³/h)	0	60	70	80	90	100	110	120	130	140	150
	(kW)	(hp)												
120-1	11	15	H (m)	23	22	21.8	21.6	21	20.5	19.5	18.5	17	16	15
120-2-2	15	20		37	34	33.6	33	31	30.2	30	28.5	27	25	24
120-2-1	18.5	25		43	41	40	39.5	38.5	37	36.5	34.5	32.5	30	27.5
120-2	22	30		48	46	45	44.5	43.5	42.4	41	40	38	36	33.5
120-3-2	30	40		59.5	57	56	55	53.5	52	51	49	46.5	43.5	41
120-3-1	30	40		65.5	64	63	62	60	58.5	57.5	55.5	52	49	46
120-3	30	40		71	69.5	68.5	67.5	66	64.4	62.5	61	57.5	54.5	51
120-4-2	37	50		82	80.5	79	78	76	73.5	72	69	66	61.5	58
120-4-1	37	50		91	87	86	84.5	82	80	78	76	72	68	64.5
120-4	45	60		96	92.5	91	90	88	85.5	83	81	77	73	68.5
120-5-2	45	60		108	104.5	103	101	99	96	93	90	85.5	80.5	75.5
120-5-1	45	60		115	110.5	109	107.5	105	102	100	97	92	86.5	83
120-5	55	75		121	115.5	114	113	110	107.5	104.5	101.5	96	91	86
120-6-2	55	75		131	128	125.5	123	121	117.3	113.5	110	104.5	98.5	92.5
120-6-1	55	75		139	134	132	130.5	127	124	121	118	111	105	100
120-6	75	100		144	139	137	135	132	128.8	126	123	116	110	104
120-7-2	75	100		154	151	148	145.5	143	138.6	134	130	123.5	116.5	109
120-7-1	75	100		161	156.5	154	152	148.5	144.5	141	137.5	130	123	116.5
120-7	75	100		166	162.5	160.5	158.5	155	151	148	145	137	129	123

CDM/CDMF 150 Performance curve

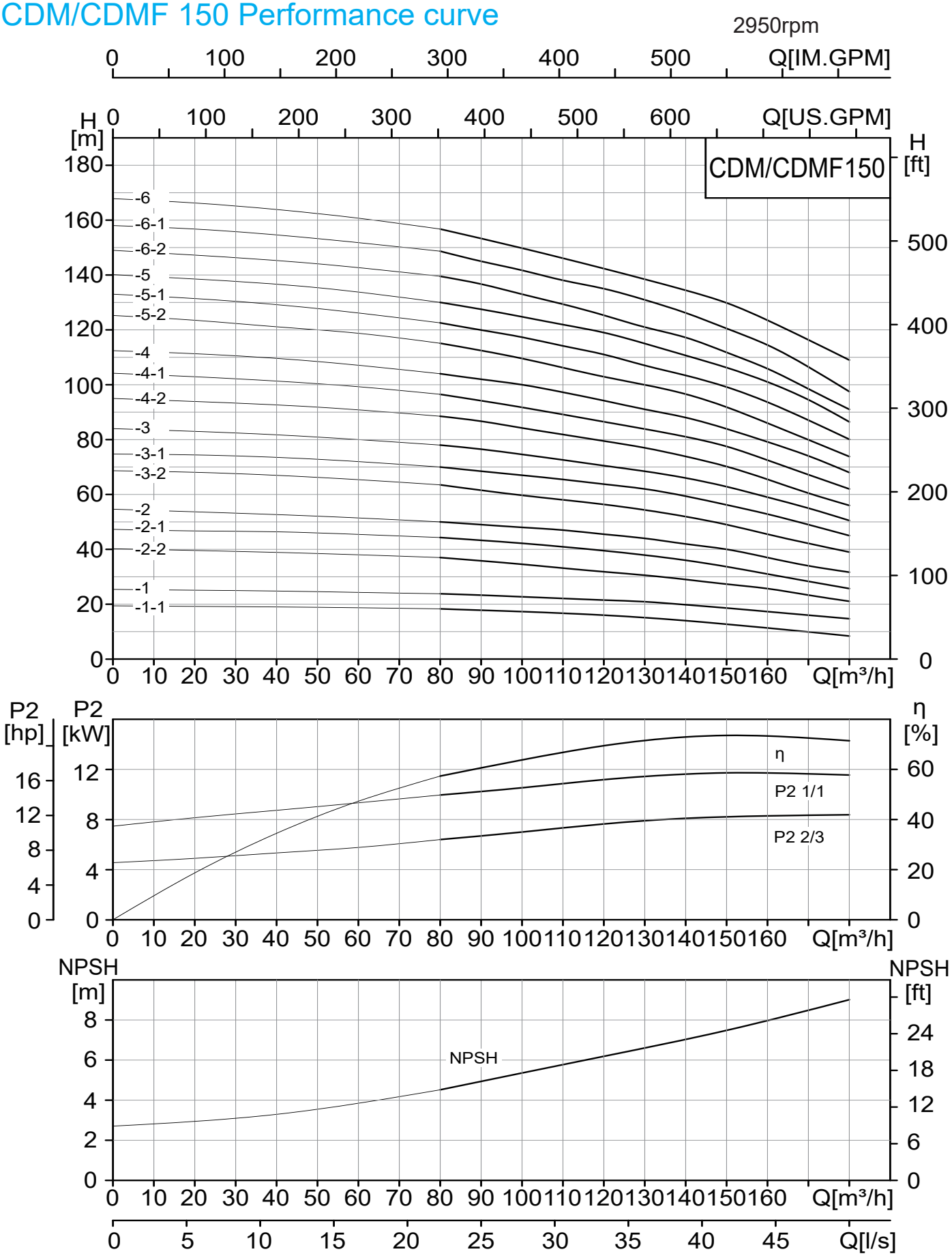

CDM/CDMF 150 Performance table

Model	Motor		Q (m³/h)	0	80	90	100	110	120	130	14	150	160	170	180
	(kW)	(hp)													
150-1-1	11	15	H (m)	19.5	18.3	17.8	17.3	17	16	15	14	12.5	11	10	8.5
150-1	15	20		25	24	23	22.5	22	21.5	20.5	20	18.5	17	16	15
150-2-2	18.5	25		40	37	35.5	34	33	32	31	29	27.5	26	23	21
150-2-1	22	30		47.5	44.3	43	42	40	39	38.5	37.5	35	33	30	27
150-2	30	40		55	50	49	48	47	45.5	44	42	40	37	34	32
150-3-2	30	40		69	53.5	61	59	57.5	56	54.5	53	49	45.5	42	39
150-3-1	37	50		75	70	68	67	65	63	62	60	56	53	49	45
150-3	37	50		83	78	76.5	75	73	70.5	68	66	63	59	55	50.5
150-4-2	45	60		95	89	87	84	81.5	79	77	74.5	70.5	65.5	60	56
150-4-1	45	60		104	96.5	94	91.5	89	86.5	84	81.5	77	72.5	67	62
150-4	55	75		112	104	102	100	97	95	91	88	84	79.5	74	68
150-5-2	55	75		125.5	115.5	112	109	106	102.5	100	97	92	86	79	73.5
150-5-1	75	100		132	122.5	119.5	117	113.5	111.5	107.5	104.5	99	93.5	87	80
150-5	75	100		140	130	127.5	125	121	119	115	111.5	106.5	101	84.5	86.5
150-6-2	75	100		149	140	137	133	130	126	121	118	112	106	98	81
150-6-1	75	100		158	148.5	145	141.7	137.5	135	131	127	120.5	114.5	106.5	97.5
150-6	75	100		168	157	153	149	145	142	139.5	137	130	123.5	116	109

CDM/CDMF 200 Performance curve

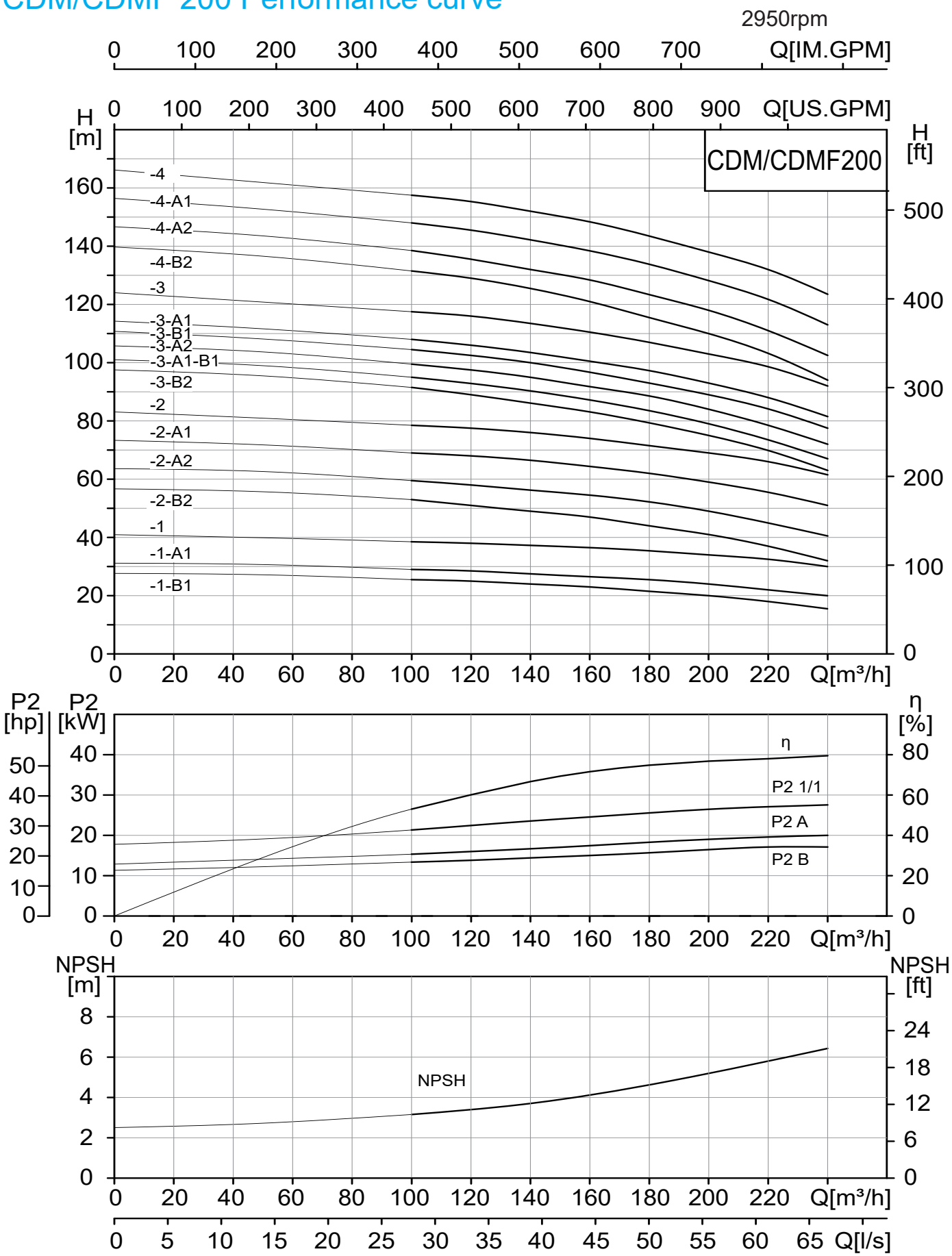

CDM/CDMF 200 Performance table

Model	Motor		Q (m³/h)	0	100	120	140	160	180	200	220	240
	(kW)	(hp)										
200-1-B	18.5	25	H (m)	28	25.5	25	24	23	21.5	20	18	15.5
200-1-A	22	30		31	29	28.5	27.5	26.5	25.5	24	22	20
200-1	30	40		40.5	38.5	38	37.5	36.5	35	34	32.5	30
200-2-2B	37	50		57	53	51	49	47	44	41	37	32
200-2-2A	45	60		63	59.5	58	56	54	52.5	49	44.5	40.5
200-2-A	55	75		73	69	68	66	64	62	59	55.5	51
200-2	55	75		82.5	78.5	77.5	76	74	71.5	69	66	61.5
200-3-2B	75	100		98	91.5	89	86.5	83.5	79	75	70	63
200-3-A-B	75	100		100.5	95	93	90	87	83.5	79	73.5	67
200-3-2A	75	100		106	99.5	97.5	94.5	91.5	89	84	78.5	72
200-3-B	75	100		111	104.5	102.5	100	97	93	89	84.5	77.5
200-3-A	75	100		114	108	106	103.5	100.5	97.5	93	88	81.5
200-3	90	120		123	117.5	116	113.5	110.5	107	103	99	92
200-4-2B	90	120		139.5	131.5	129	125.5	121	115.5	110	103.5	94
200-4-2A	110	150		147	138.5	136	132	128	124	118	111	102.5
200-4-A	110	150		157	148	145.5	142.5	138	134	128	122	113
200-4	110	150		166	157.5	155.5	152.5	148	143.5	138	132.5	123.5

CDM/CDMF 1 Installation sketch

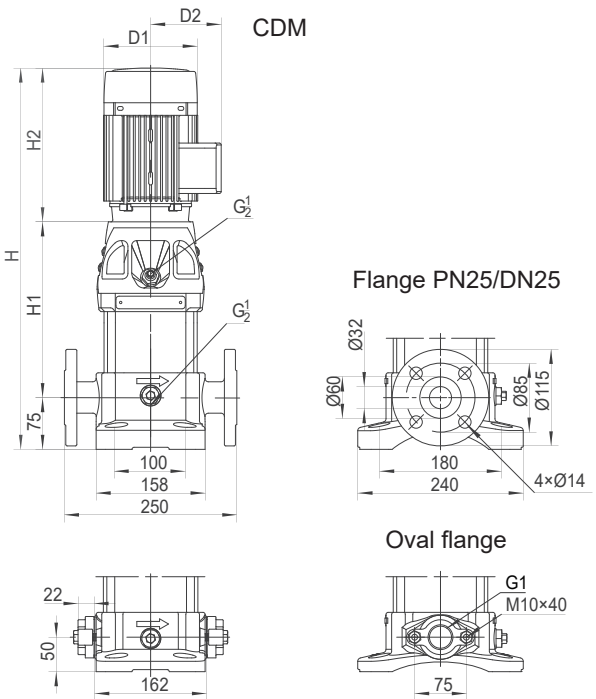

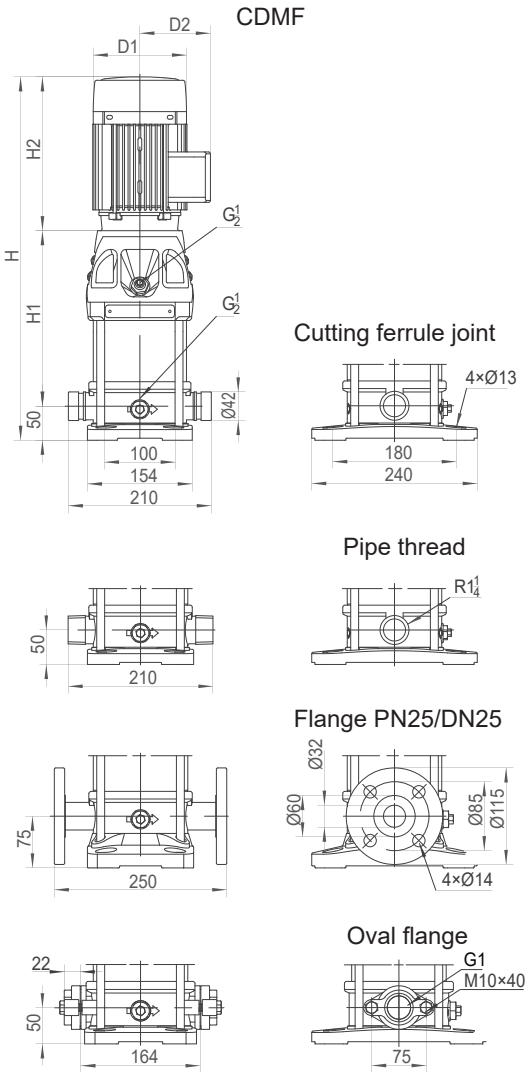

Note1：CDM/CDMF1-27~1-40 have no oval flange pipeline connection.
Note2：The overall dimensions of the single-phase motor and explosive-proof motor are a little different. Please contact us for details.

Dimensions and weights

Model	Dimension (mm)					Weight(kg)	
	H1	H2	H(Flange/Oth.)	D1	D2	CDM	CDMF
1-2	187	215	477/452	148	117	23	19
1-3	207	215	497/472	148	117	23	19
1-4	227	215	517/492	148	117	24	20
1-5	247	215	537/512	148	117	24	20
1-6	267	215	557/532	148	117	25	21
1-7	287	215	577/552	148	117	25	21
1-8	307	215	597/572	148	117	27	23
1-9	327	215	617/592	148	117	27	23
1-10	347	215	637/612	148	117	28	24
1-11	367	215	657/632	148	117	28	24
1-12	397	245	717/692	170	142	31	27
1-13	417	245	737/712	170	142	31	27
1-15	457	245	777/752	170	142	32	28
1-17	497	245	817/792	170	142	35	31
1-19	537	245	857/832	170	142	36	32
1-21	577	245	897/872	170	142	36	32
1-22	597	245	917/892	170	142	37	33
1-23	617	290	937/912	190	155	43	39
1-25	667	290	1032/1007	190	155	44	40
1-27	707	290	1072/1047	190	155	45	41
1-30	767	290	1132/1107	190	155	46	42
1-32	807	290	1172/1147	190	155	49	45
1-33	827	290	1192/1167	190	155	49	45
1-34	847	290	1212/1187	190	155	50	46
1-36	887	290	1252/1227	190	155	51	47
1-38	927	290	1292/1267	190	155	51	47
1-40	967	290	1332/1307	190	155	52	48

CDM/CDMF 3 Installation sketch

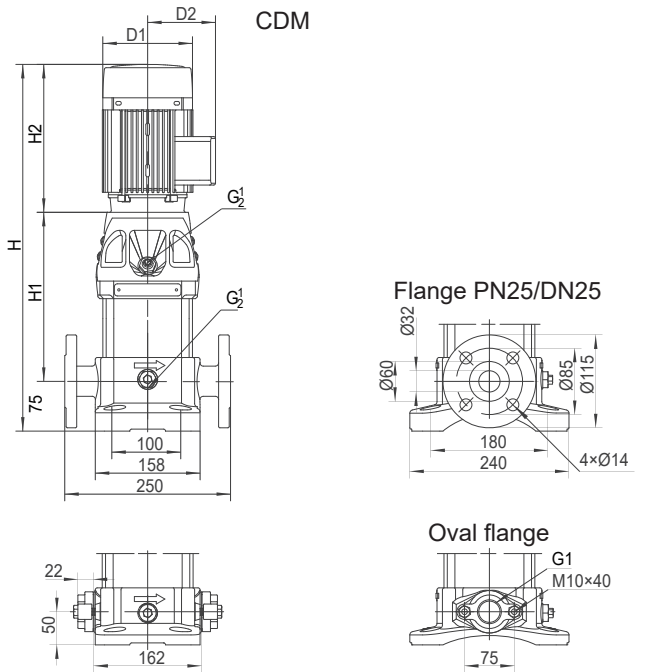

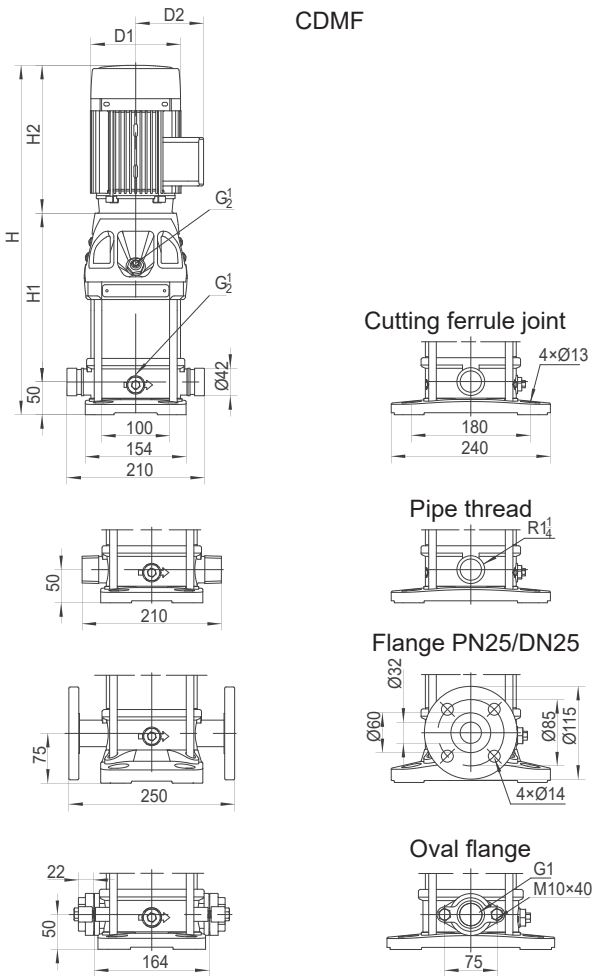

Note1: CDM/CDMF3-21~3-31 have no oval flange pipeline connection.
Note2: The overall dimensions of the single-phase motor and explosive-proof motor are a little different. Please contact us for details.

Dimensions and weights

Model	Dimension (mm)					Weight(kg)	
	H1	H2	H(Flange/Oth.)	D1	D2	CDM	CDMF
3-2	187	215	477/452	148	117	24	20
3-3	207	215	497/472	148	117	24	20
3-4	227	215	517/492	148	117	25	21
3-5	247	215	537/512	148	117	26	22
3-6	267	215	557/532	148	117	27	23
3-7	297	245	617/592	170	142	30	26
3-8	317	245	637/612	170	142	30	26
3-9	337	245	657/632	170	142	32	28
3-10	357	245	677/652	170	142	33	29
3-11	377	245	697/672	170	142	33	29
3-12	397	245	717/692	170	142	34	30
3-13	427	290	792/767	190	155	39	35
3-14	447	290	812/787	190	155	40	36
3-15	467	290	832/807	190	155	40	36
3-16	487	290	852/827	190	155	41	37
3-18	527	290	892/867	190	155	43	39
3-19	547	290	912/887	190	155	44	40
3-20	567	290	932/907	190	155	44	40
3-21	587	290	952/927	190	155	45	41
3-22	607	290	972/947	190	155	45	41
3-23	627	290	992/967	190	155	46	42
3-24	647	290	1012/987	190	155	46	42
3-25	677	345	1097/1072	197	165	57	53
3-27	717	345	1137/1112	197	165	58	54
3-28	737	345	1157/1132	197	165	58	54
3-29	757	345	1177/1152	197	165	58	54
3-31	797	345	1217/1192	197	165	59	55

CDM/CDMF 5 Installation sketch

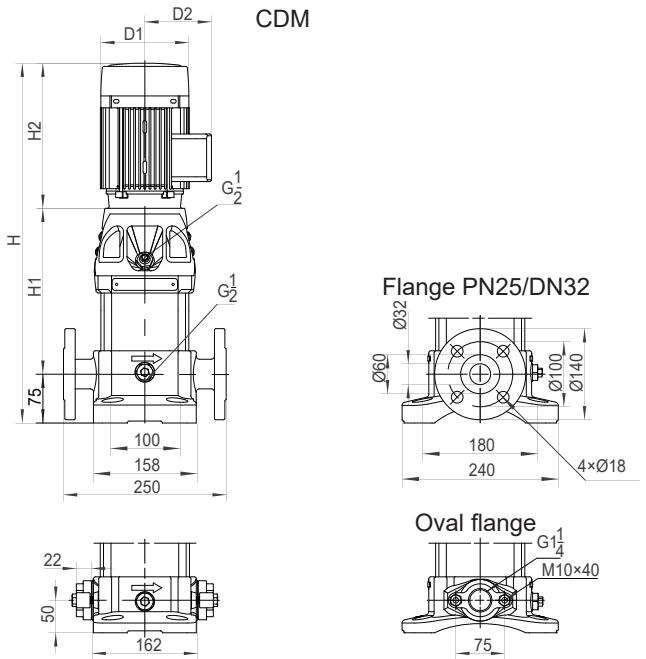

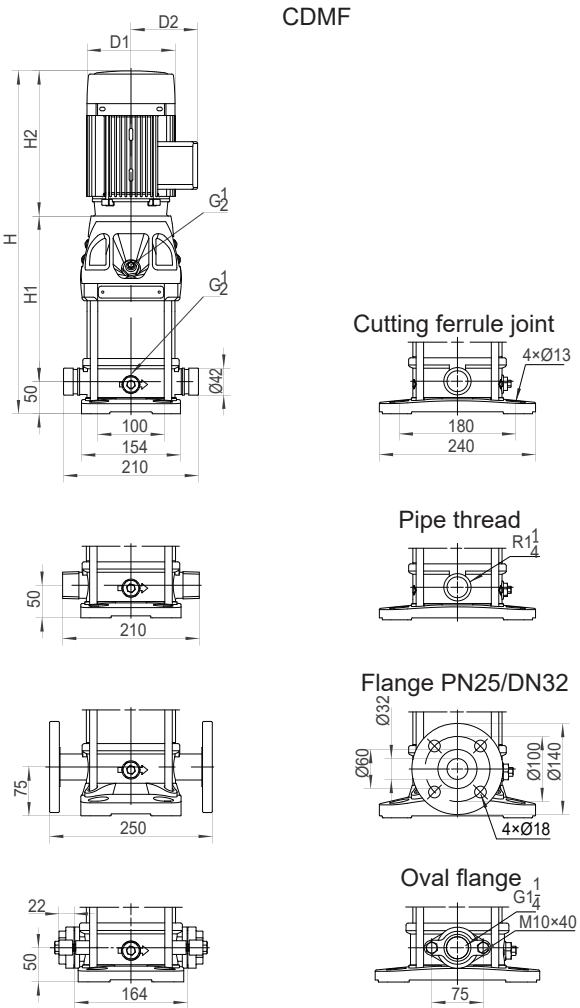

Note1: CDM/CDMF5-21~5-33 have no oval flange pipeline connection.
Note2: The overall dimensions of the single-phase motor and explosive-proof motor are a little different. Please contact us for details.

Dimensions and weights

Model	Dimension (mm)					Weight(kg)	
	H1	H2	H(Flange/Oth.)	D1	D2	CDM	CDMF
5-2	201	215	491/466	148	117	24	19
5-3	228	215	518/493	148	117	26	21
5-4	255	215	545/520	148	117	27	22
5-5	292	245	612/587	170	142	30	25
5-6	319	245	639/614	170	142	32	27
5-7	346	245	666/641	170	142	32	27
5-8	373	245	693/668	170	142	33	28
5-9	410	290	775/750	190	155	38	33
5-10	437	290	802/777	190	155	39	34
5-11	464	290	829/804	190	155	39	34
5-12	491	290	856/831	190	155	42	37
5-13	518	290	883/858	190	155	42	37
5-14	545	290	910/885	190	155	43	38
5-15	572	290	937/912	190	155	43	38
5-16	599	290	964/939	190	155	44	39
5-17	636	345	1056/1030	197	165	55	50
5-18	663	345	1083/1058	197	165	55	50
5-20	717	345	1137/1112	197	165	56	51
5-21	744	345	1164/1139	197	165	57	52
5-22	771	355	1201/1176	230	188	64	59
5-23	798	355	1228/1203	230	188	65	60
5-24	825	355	1255/1230	230	188	65	60
5-25	852	355	1282/1257	230	188	66	61
5-27	906	355	1336/1311	230	188	67	62
5-28	933	355	1363/1338	230	188	67	62
5-29	1035	390	1500/1475	260	208	87	82
5-30	1062	390	1527/1502	260	208	88	83
5-33	1143	390	1608/1583	260	208	89	84

CDM/CDMF 10 Installation sketch

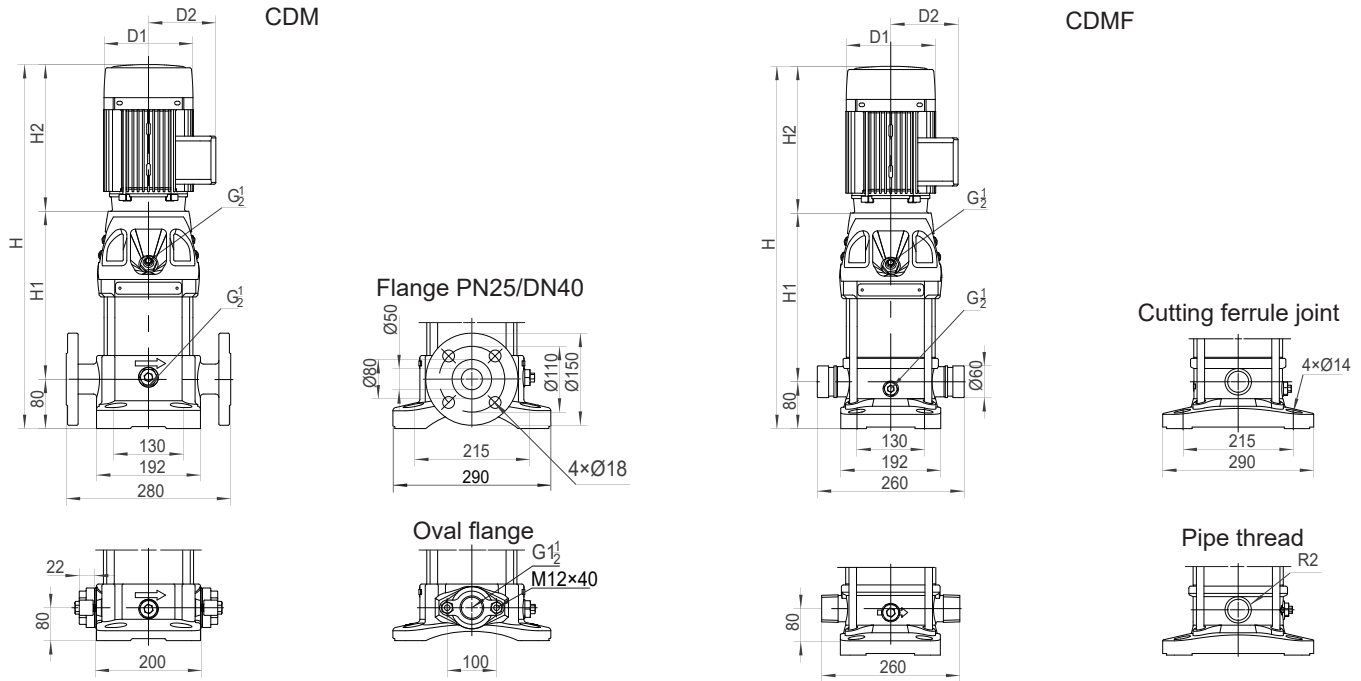

Note1: CDM/CDMF10-15~10-22 have no oval flange pipeline connection.
Note2: The overall dimensions of the single-phase motor and explosive-proof motor are a little different. Please contact us for details.

Dimensions and weights

Model	Dimension (mm)					Weight(kg)	
	H1	H2	H	D1	D2	CDM	CDMF
10-1	267	245	592	170	142	31	29
10-2	267	245	592	170	142	32	30
10-3	297	245	622	170	142	35	33
10-4	337	290	707	190	155	41	39
10-5	367	290	737	190	155	45	43
10-6	397	290	767	190	155	46	44
10-7	437	345	862	197	165	57	55
10-8	467	345	892	197	165	58	56
10-9	497	355	932	230	188	65	63
10-10	527	355	962	230	188	66	64
10-11	557	355	992	230	188	67	65
10-12	665	355	1100	230	188	68	66
10-13	695	390	1165	260	208	88	86
10-14	725	390	1195	260	208	89	87
10-15	755	390	1225	260	208	90	88
10-16	785	390	1255	260	208	99	97
10-17	815	390	1285	260	208	100	98
10-18	845	390	1315	260	208	101	99
10-19	875	390	1345	260	208	102	100
10-20	905	390	1375	260	208	103	101
10-21	935	390	1405	260	208	104	102
10-22	995	500	1575	330	255	170	168

CDM/CDMF 15 Installation sketch

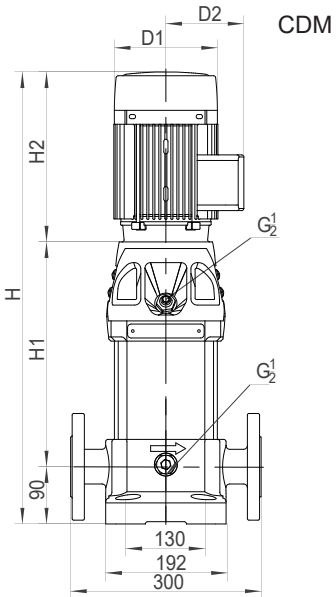

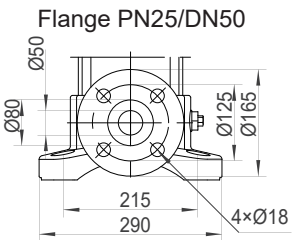

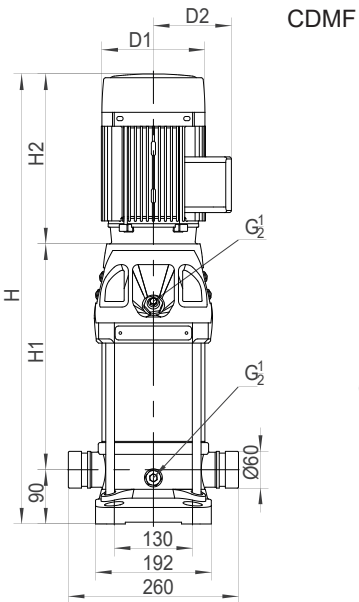

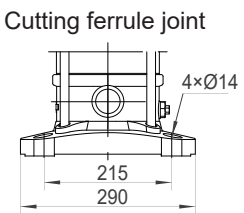

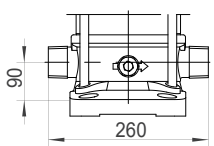

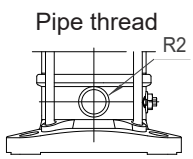

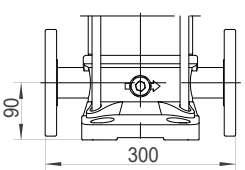

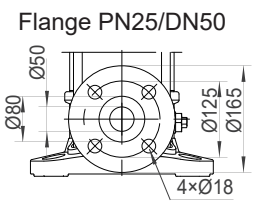

The overall dimensions of the single-phase motor and explosive-proof motor are a little different. Please contact us for details.

Dimensions and weights

Model	Dimension (mm)					Weight(kg)	
	H1	H2	H	D1	D2	CDM	CDMF
15-1	297	245	632	170	142	40	33
15-2	307	290	687	190	155	48	41
15-3	362	345	797	197	165	59	52
15-4	407	355	852	230	188	66	59
15-5	452	355	897	230	188	68	61
15-6	575	390	1055	260	208	90	83
15-7	620	390	1100	260	208	91	84
15-8	665	390	1145	260	208	98	91
15-9	710	390	1190	260	208	99	92
15-10	785	500	175	330	255	157	150
15-11	830	500	1420	330	255	159	152
15-12	875	500	1465	330	255	160	153
15-13	920	500	1510	330	255	162	155
15-14	965	500	1555	330	255	163	156
15-15	1010	500	1600	330	255	179	172
15-16	1055	500	1645	330	255	181	174
15-17	1100	500	1690	330	255	182	175
15-18	1145	500	1735	330	255	184	177

CDM/CDMF 20 Installation sketch

CDM

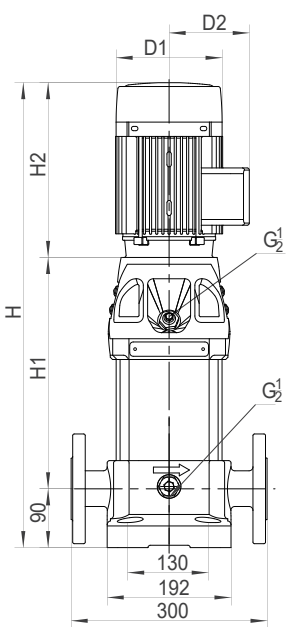

Flange PN25/DN50

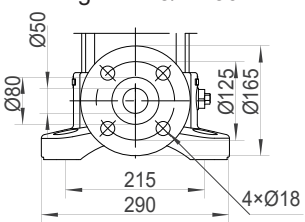

CDMF

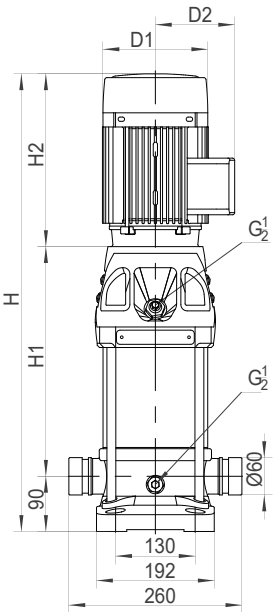

Cutting ferrule joint

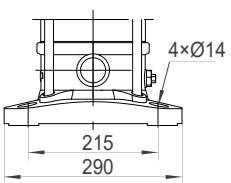

Pipe thread

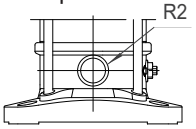

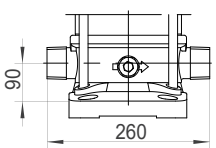

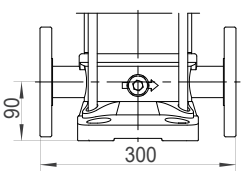

Flange PN25/DN50

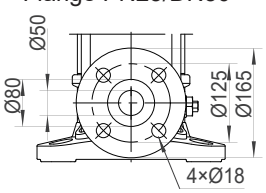

The overall dimensions of the single-phase motor and explosive-proof motor are a little different. Please contact us for details.

Dimensions and weights

Model	Dimension (mm)					Weight(kg)	
	H1	H2	H	D1	D2	CDM	CDMF
20-1	297	245	632	170	142	40	33
20-2	307	290	687	190	155	48	41
20-3	362	355	807	230	188	66	59
20-4	485	390	965	260	208	88	81
20-5	530	390	1010	260	208	90	83
20-6	575	390	1055	260	208	99	92
20-7	620	390	1100	260	208	100	93
20-8	695	500	1285	330	255	167	160
20-10	785	500	1375	330	255	170	163
20-12	875	500	1465	330	255	188	181
20-14	965	500	1555	330	255	191	184
20-17	1100	550	1740	330	255	212	205

CDM/CDMF 32 Installation sketch

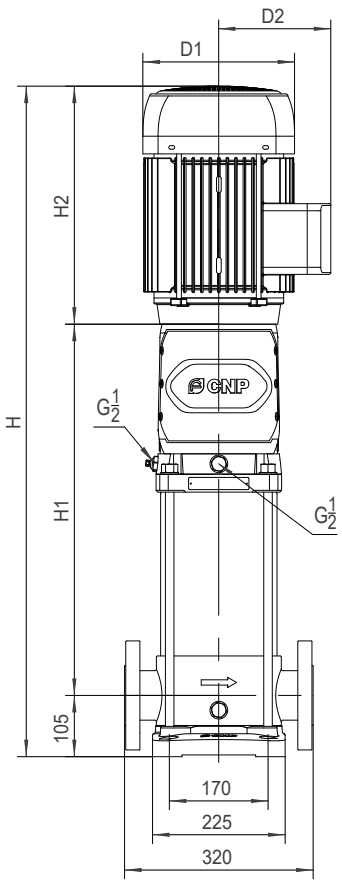

Flange PN25-40/DN65

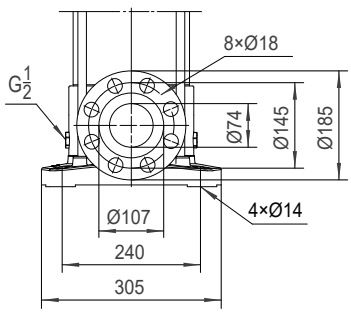

The overall dimensions of the single-phase motor and explosive-proof motor are a little different. Please contact us for details.

Dimensions and weights

Model	Dimension (mm)					Weight(kg)	
	H1	H2	H	D1	D2	CDM	CDMF
32-1-1	329	290	724	190	155	66	54
32-1	329	290	724	190	155	68	56
32-2-2	399	345	849	197	165	73	69
32-2	399	355	859	230	180	79	75
32-3-2	560	390	1055	260	208	102	98
32-3	560	390	1055	260	208	102	98
32-4-2	630	390	1125	260	208	113	109
32-4	630	390	1125	260	208	113	109
32-5-2	730	500	1335	330	255	184	179
32-5	730	500	1335	330	255	184	179
32-6-2	800	500	1405	330	255	186	182
32-6	800	500	1405	330	255	186	182
32-7-2	870	500	1475	330	255	204	200
32-7	870	500	1475	330	255	204	200
32-8-2	940	500	1545	330	255	207	203
32-8	940	500	1545	330	255	207	203

Model	Dimension (mm)					Weight(kg)	
	H1	H2	H	D1	D2	CDM	CDMF
32-9-2	1010	550	1665	330	255	218	214
32-9	1010	550	1665	330	255	218	214
32-10-2	1080	550	1735	330	255	221	217
32-10	1080	550	1735	330	255	221	217
32-11-2	1150	575	1830	360	285	277	272
32-11	1150	575	1830	260	285	277	272
32-12-2	1220	575	1900	360	285	280	275
32-12	1220	575	1900	360	285	280	275
32-13-2	1290	650	2045	400	310	343	339
32-13	1290	650	2045	400	310	343	339
32-14-2	1360	650	2115	400	310	346	342
32-14	1360	650	2115	400	310	346	342
32-15-2	1430	650	2185	400	310	349	345
32-15	1430	650	2185	400	310	349	345
32-16-2	1500	650	2255	400	310	352	347
32-16	1500	650	2255	400	310	352	347

CDM/CDMF 42 Installation sketch

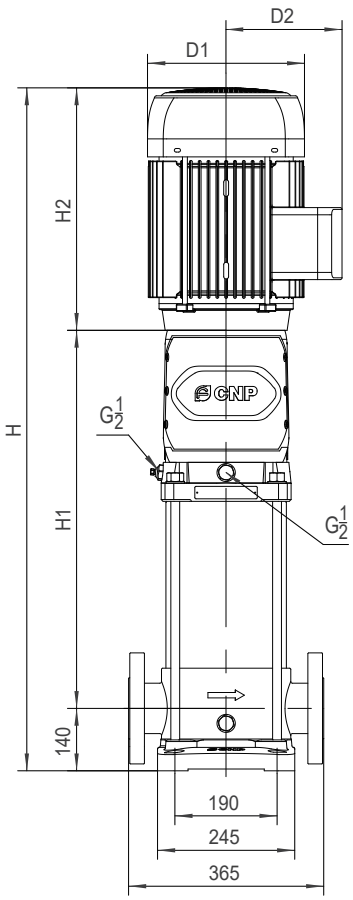

Flange PN25-40/DN80

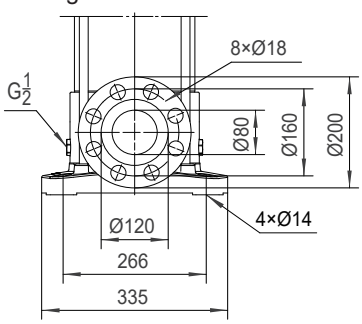

The overall dimensions of the single-phase motor and explosive-proof motor are a little different. Please contact us for details.

Dimensions and weights

Model	Dimension (mm)					Weight(kg)	
	H1	H2	H	D1	D2	CDM	CDMF
42-1-1	350	345	835	197	165	83	73
42-1	350	355	845	230	188	90	80
42-2-2	521	390	1051	260	208	113	103
42-2	521	390	1051	260	208	121	111
42-3-2	631	500	1271	330	255	192	182
42-3	631	500	1271	330	255	192	182
42-4-2	711	500	1351	330	255	211	201
42-4	711	500	1351	330	255	211	201
42-5-2	791	550	1481	330	255	223	212
42-5	791	550	1481	330	255	223	212
42-6-2	871	575	1586	360	285	279	269
42-6	871	575	1586	360	285	279	269
42-7-2	951	650	1741	400	310	343	333

Model	Dimension (mm)					Weight(kg)	
	H1	H2	H	D1	D2	CDM	CDMF
42-7	951	650	1741	400	310	343	333
42-8-2	1031	650	1821	400	310	347	337
42-8	1031	650	1821	400	310	347	337
42-9-2	1111	650	1901	400	310	350	340
42-9	1111	650	1901	400	310	370	360
42-10-2	1191	650	1981	400	310	374	364
42-10	1191	650	1981	400	310	374	364
42-11-2	1271	685	2096	450	345	477	467
42-11	1271	685	2096	450	345	477	467
42-12-2	1351	685	2176	450	345	481	471
42-12	1351	685	2176	450	345	481	471
42-13-2	1431	685	2256	450	345	484	474

CDM/CDMF 65 Installation sketch

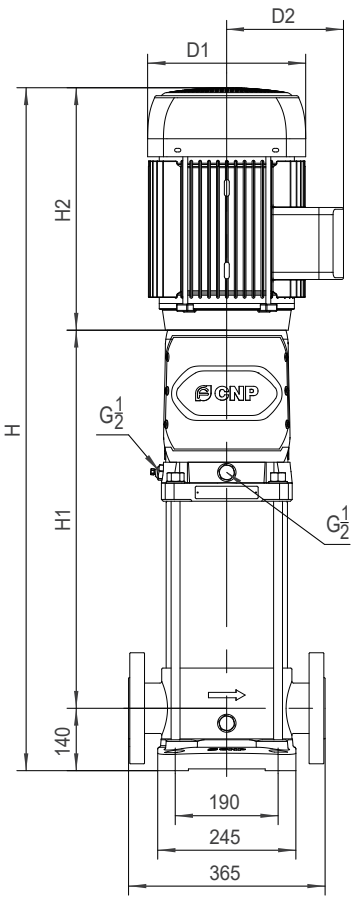

Flange PN16/DN100

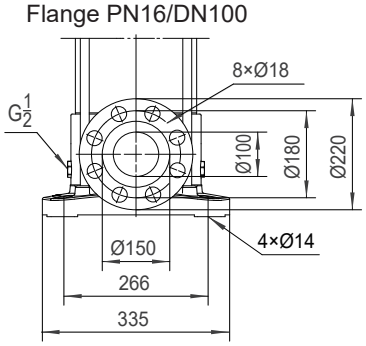

The overall dimensions of the single-phase motor and explosive-proof motor are a little different. Please contact us for details.
For CDM/CDMF 65 series,PN25-40/DN100 standard flange is also available if required

Dimensions and weights

Model	Dimension (mm)					Weight(kg)	
	H1	H2	H	D1	D2	CDM	CDMF
65-1-1	353	355	848	230	188	101	70
65-1	444	390	974	260	208	121	90
65-2-2	527	390	1057	260	208	133	102
65-2-1	557	500	1197	330	255	201	170
65-2	557	500	1197	330	255	201	170
65-3-2	640	500	1280	330	255	219	188
65-3-1	640	500	1280	330	255	219	188
65-3	640	550	1330	330	255	227	196
65-4-2	723	550	1413	330	255	231	200
65-4-1	723	575	1438	360	285	284	253
65-4	723	575	1438	360	285	284	253

Model	Dimension (mm)					Weight(kg)	
	H1	H2	H	D1	D2	CDM	CDMF
65-5-2	806	650	1596	400	310	349	318
65-5-1	806	650	1596	400	310	349	318
65-5	806	650	1596	400	310	349	318
65-6-2	889	650	1679	400	310	353	322
65-6-1	889	650	1679	400	310	373	342
65-6	889	650	1679	400	310	373	342
65-7-2	972	650	1762	400	310	377	346
65-7-1	972	650	1762	400	310	377	346
65-7	972	685	1797	460	340	477	446
65-8-2	1055	685	1880	460	340	481	450
65-8-1	1055	685	1880	460	340	481	450

CDM/CDMF 85 Installation sketch

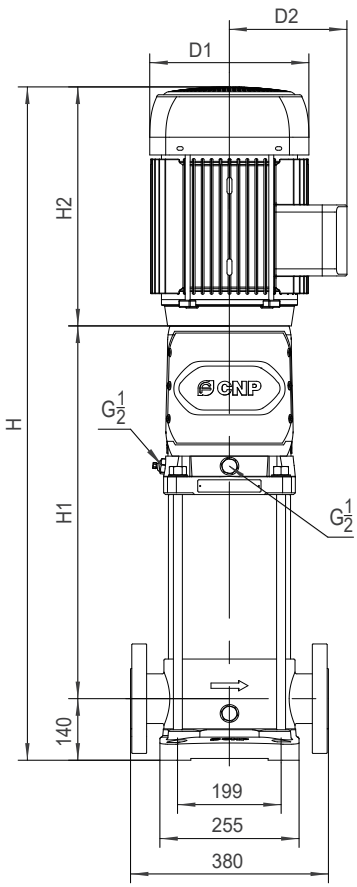

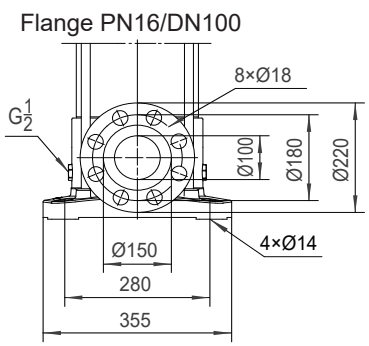

The overall dimensions of the single-phase motor and explosive-proof motor are a little different. Please contact us for details.
For CDM/CDMF 85 series,PN25-40/DN100 standard flange is also available if required

Dimensions and weights

Model	Dimension (mm)					Weight(kg)	
	H1	H2	H	D1	D2	CDM	CDMF
85-1-1	453	390	983	260	208	110	101
85-1	453	390	983	260	208	118	109
85-2-2	575	500	1215	330	255	190	181
85-2	575	500	1215	330	255	205	196
85-3-2	667	550	1357	330	255	217	208
85-3	667	575	1382	360	285	270	261

Model	Dimension (mm)					Weight(kg)	
	H1	H2	H	D1	D2	CDM	CDMF
85-4-2	759	650	1549	400	310	335	326
85-4	759	650	1549	400	310	335	326
85-5-2	851	650	1641	400	310	359	350
85-5	851	650	1641	400	310	359	350
85-6-2	943	685	1768	460	340	463	454
85-6	943	685	1768	460	340	463	454

CDM/CDMF 120 Installation sketch

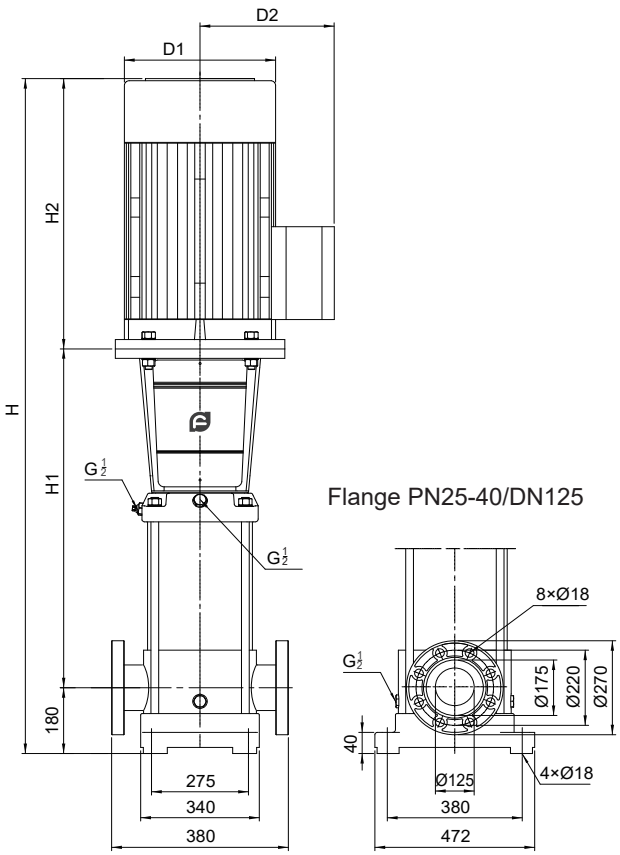

The overall dimensions of the single-phase motor and explosive-proof motor are a little different. Please contact us for details.

Dimensions and weights

Model	Dimension (mm)					Weight(kg)	
	H1	H2	H	D1	D2	CDM	CDMF
120-1	660	500	1340	330	255	226	213
120-2-2	820	500	1500	330	255	250	237
120-2-1	820	550	1550	330	255	263	250
120-2	820	575	1575	360	285	310	297
120-3-2	980	650	1810	400	310	375	362
120-3-1	980	650	1810	400	310	375	362
120-3	980	650	1810	400	310	375	362
120-4-2	1140	650	1970	400	310	405	392
120-4-1	1140	650	1970	400	310	405	392
120-4	1140	685	2005	460	340	501	488

Model	Dimension (mm)					Weight(kg)	
	H1	H2	H	D1	D2	CDM	CDMF
120-5-2	1300	685	2165	460	340	509	496
120-5-1	1300	685	2165	460	340	509	496
120-5	1330	760	2270	540	370	632	619
120-6-2	1490	760	2430	540	370	641	628
120-6-1	1490	760	2430	540	370	641	628
120-6	1490	845	2515	580	410	757	744
120-7-2	1650	845	2675	580	410	766	753
120-7-1	1650	845	2675	580	410	766	753
120-7	1650	845	2675	580	410	766	753

CDM/CDMF 150 Installation sketch

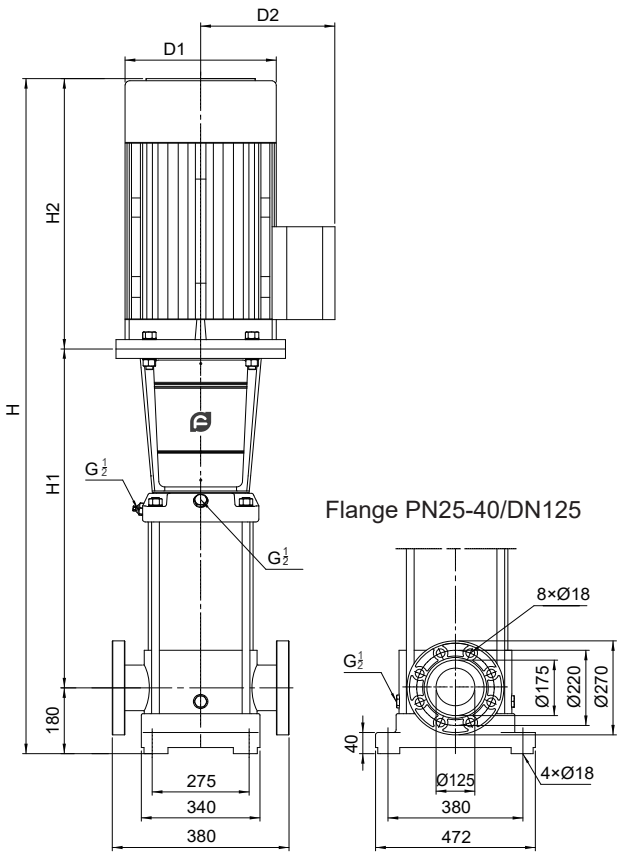

The overall dimensions of the single-phase motor and explosive-proof motor are a little different. Please contact us for details.

Dimensions and weights

Model	Dimension (mm)					Weight(kg)	
	H1	H2	H	D1	D2	CDM	CDMF
150-1-1	660	500	1340	330	255	227	214
150-1	660	500	1340	330	255	240	227
150-2-2	820	550	1550	330	255	263	250
150-2-1	820	575	1575	363	285	311	295
150-2	820	650	1650	400	310	364	351
150-3-2	980	650	1810	400	310	374	361
150-3-1	980	650	1810	400	310	395	382
150-3	980	650	1810	400	310	395	382
150-4-2	1140	685	2005	460	340	502	489

Model	Dimension (mm)					Weight(kg)	
	H1	H2	H	D1	D2	CDM	CDMF
150-4-1	1140	685	2005	460	340	502	489
150-4	1170	760	2110	540	370	625	612
150-5-2	1330	760	2270	540	370	636	623
150-5-1	1330	845	2355	580	410	752	739
150-5	1330	845	2355	580	410	752	739
150-6-2	1490	845	2515	580	410	762	749
150-6-1	1490	845	2515	580	410	762	749
150-6	1490	845	2515	580	410	762	749

CDM/CDMF 200 Installation sketch

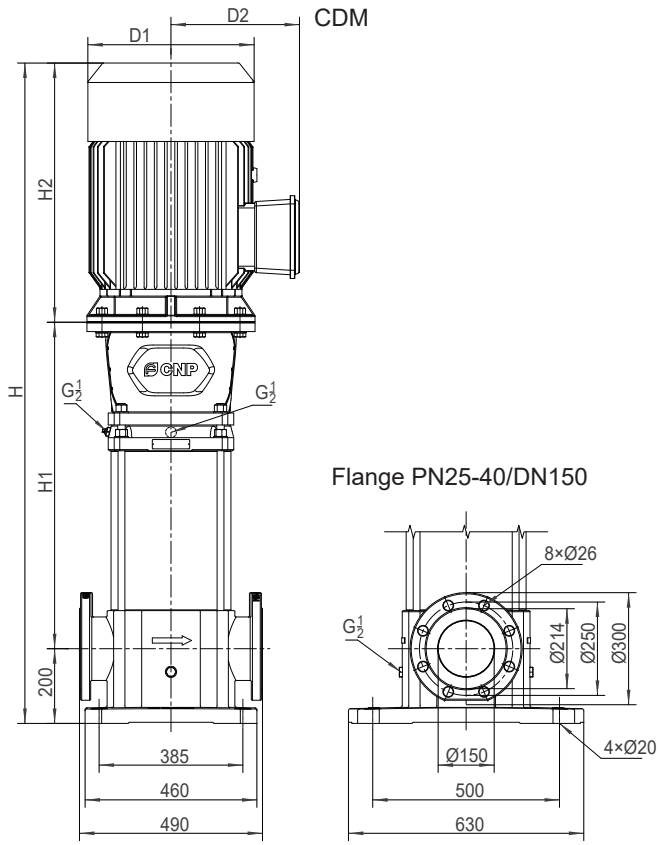

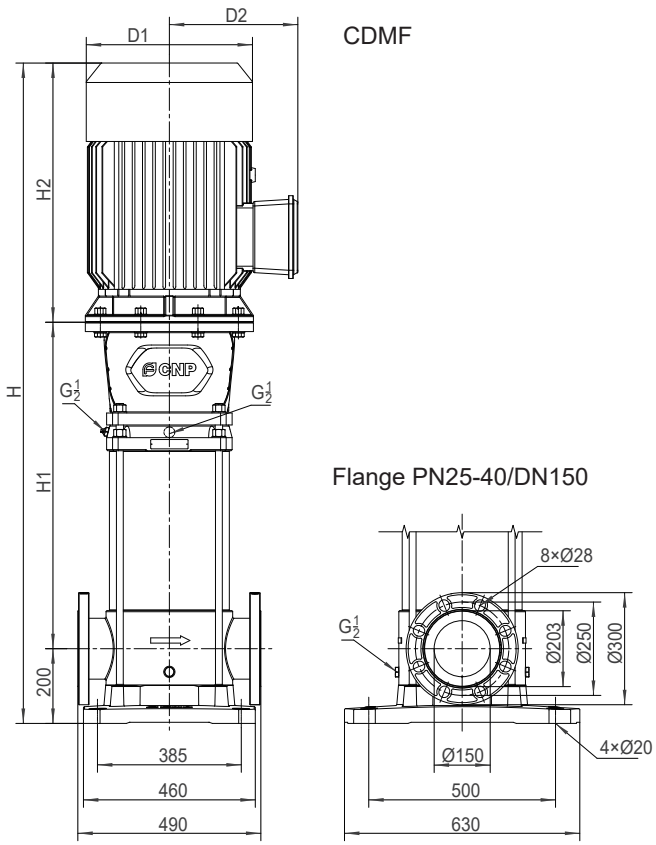

The overall dimensions of the single-phase motor and explosive-proof motor are a little different. Please contact us for details.

Dimensions and weights

Model	Dimension (mm)					Weight(kg)	
	H1	H2	H	D1	D2	CDM	CDMF
200-1-B	680	550	1430	330	255	344	314
200-1-A	680	575	1455	360	285	380	350
200-1	680	650	1530	400	310	437	407
200-2-2B	874	650	1724	400	310	481	451
200-2-2A	874	685	1759	460	340	536	506
200-2-A	904	760	1864	540	370	631	601
200-2	904	845	1864	540	370	631	601
200-3-2B	1098	845	2143	580	410	784	754
200-3-A-B	1098	845	2143	580	410	784	754

Model	Dimension (mm)					Weight(kg)	
	H1	H2	H	D1	D2	CDM	CDMF
200-3-2A	1098	845	2143	580	410	784	754
200-3-B	1098	845	2143	580	410	784	754
200-3-A	1098	895	2143	580	410	784	754
200-3	1098	895	2193	580	410	853	823
200-4-2B	1292	1140	2632	580	410	866	836
200-4-2A	1292	1140	2632	645	550	1205	1175
200-4-A	1292	1140	2632	645	550	1205	1175
200-4	1292	1140	2632	645	550	1205	1175

MEMO

Nanfang Pump Industry Co,.Ltd.

CNP Headquarter
Address:Renhe Town, Hangzhou, China
Post code:311107
Tel:+86 571 88637351, +86 571 86397872
Fax:+86 571 86397809
E-mail:info@nanfang-pump.com
Http://www.cnppump.com

E 191002
Code 1500077598
subject to amendments