Installation Manual

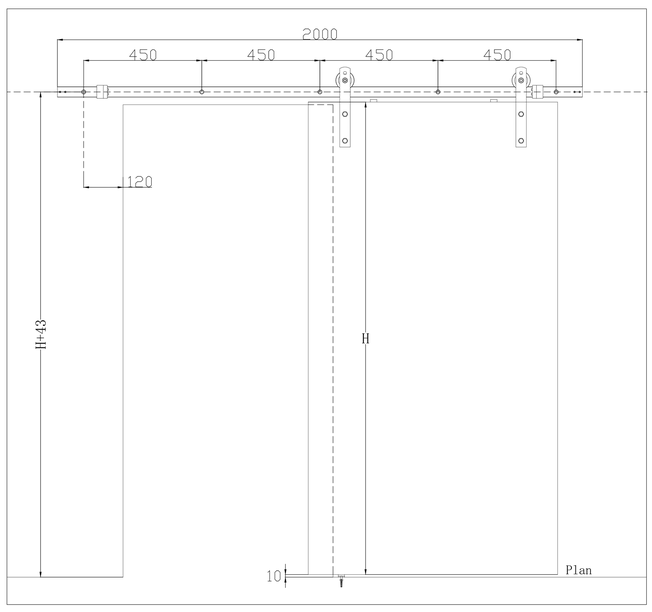

Tools

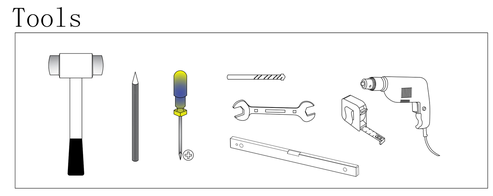

The whole set

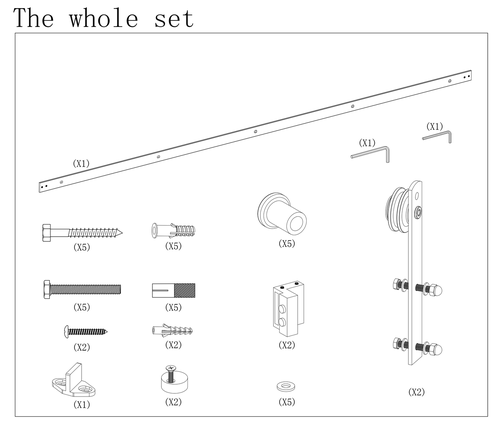

Step1. Drill holes on the wall

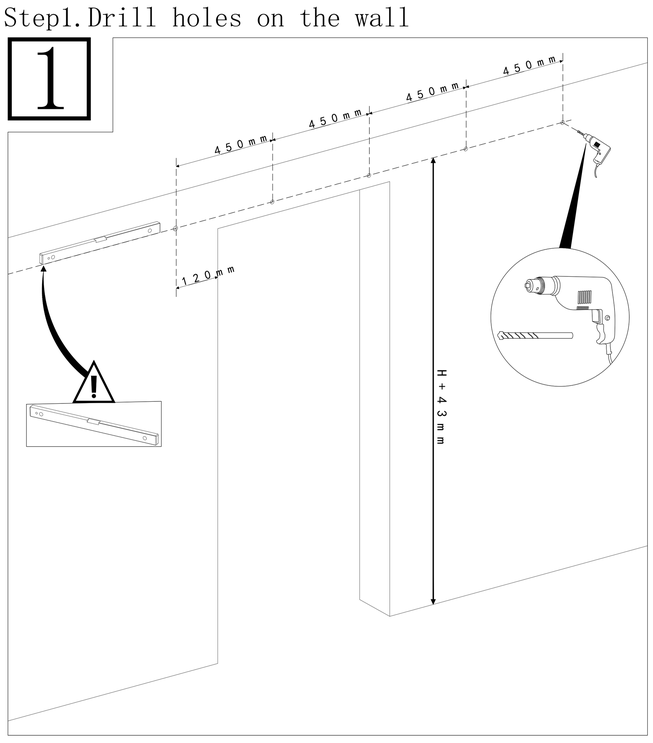

Step3. Fix screw for hanger

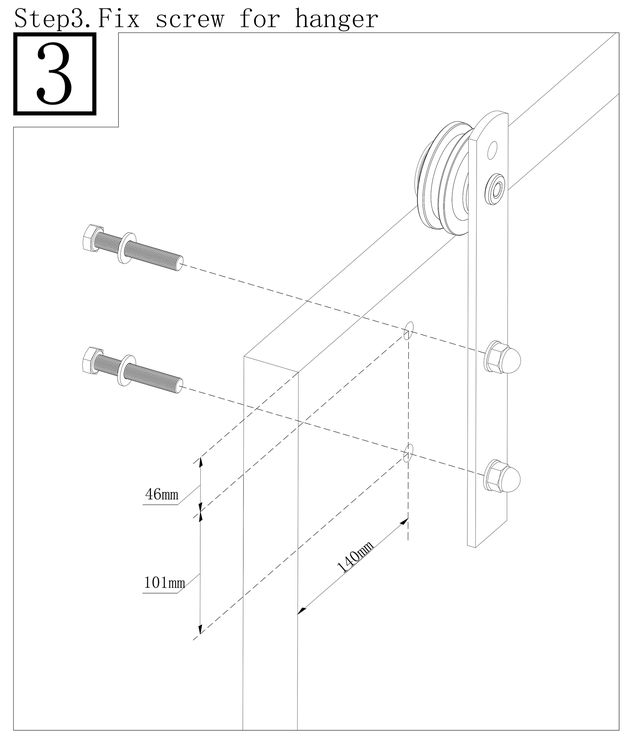

Step2. Install the track

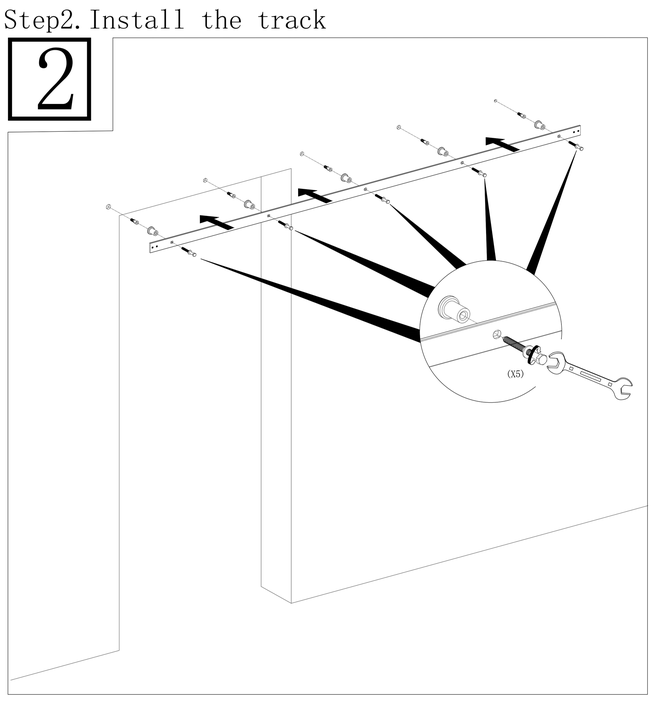

Step4. Install Anti-jumper

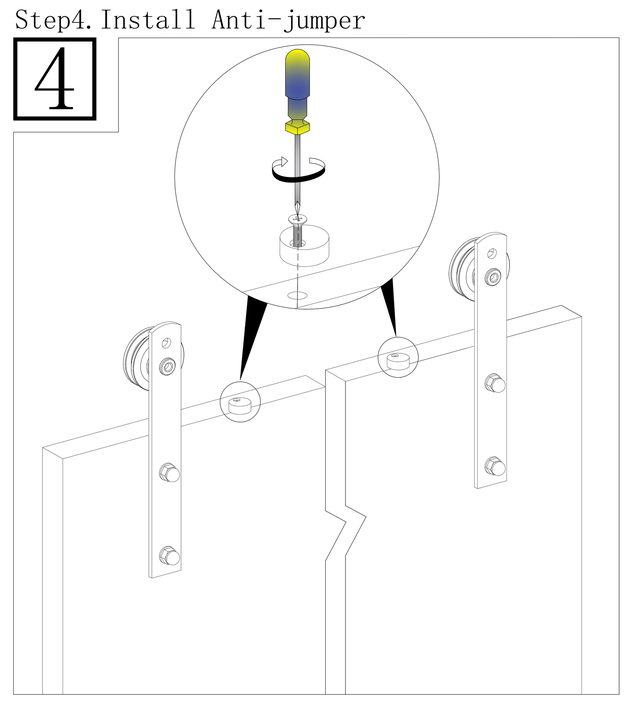

Step5. Install door&fix Anti-jumper

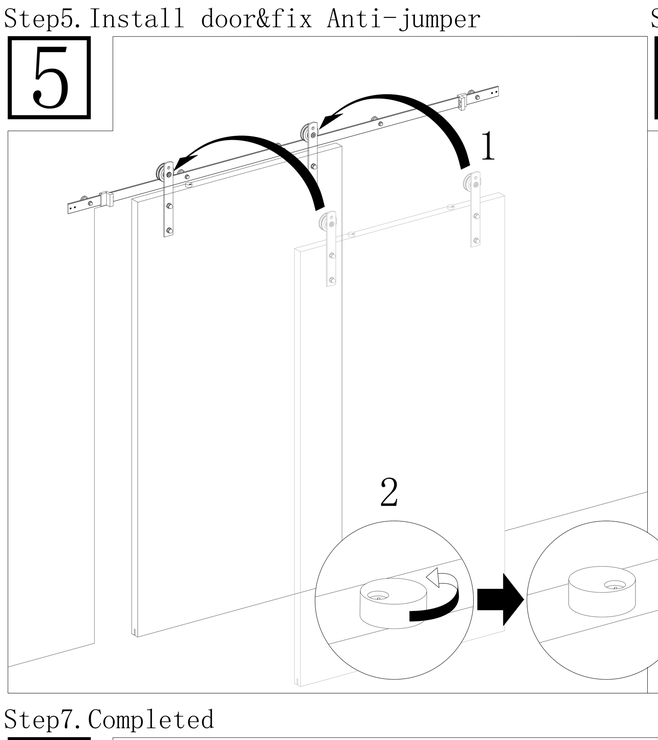

Step6. Install floor guide

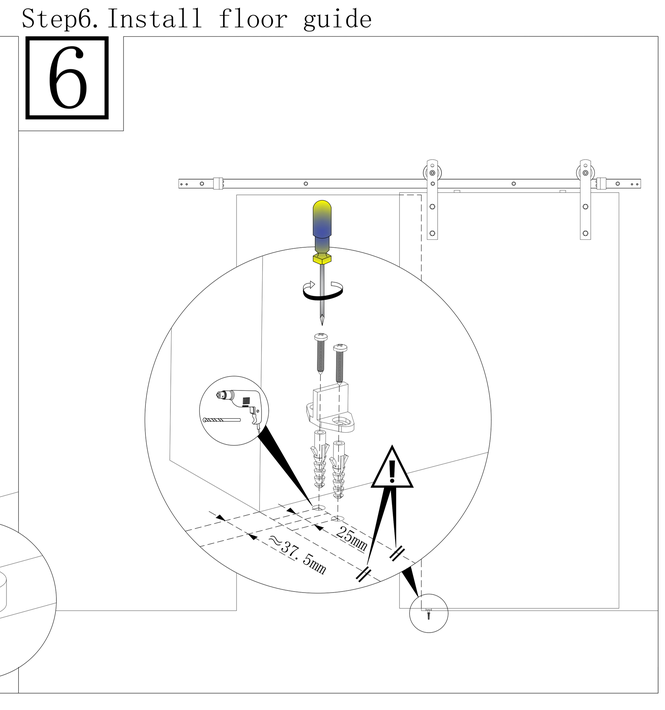
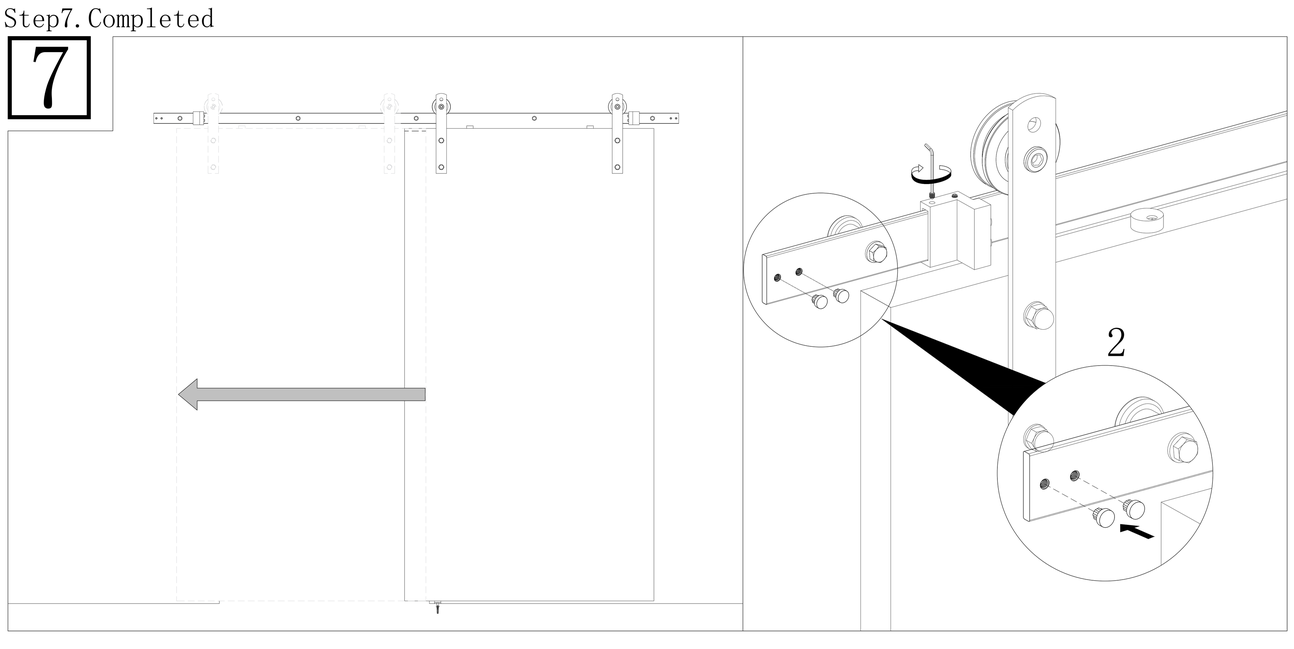
Step7. Completed