EAST E750

GROW ROOM DEHUMIDIFIER

INSTRUCTION MANUAL

EAST DEHUMIDIFIER

Eastdehumidifier.com

Thank you for purchasing East dehumidifier!

WARNING! Before using, read this instruction manual of this dehumidifier to ensure correct usage through understanding. After reading, store them in a safe place for future reference. Incorrect handling of this product could possibly result in personal injury or physical damage.

Exclusively grow room designed dehumidifiers

1. All metal plate framed structure shell.
2. Separated electrical box for easily maintaining.
3. Low voltage control.
4. Opposite air inlet and outlet to reduce efficiency interference.
5. Duct kits as optional accessories can be easily connected.
6. Long-life brushless direct drive fan.Noise 50% lower.
7. Memory function of operating mode after power outages.
8. High efficiency rotary compressor.

DIRECTORY

SAFTY INSTRUCTIONS ---------- 4

SPECIFICATIONS ---------- 5

UNPACKING THE DEHUMIDIFIER ---------- 6

OPERATION GUIDE ---------- 8

EXTERNAL CONTROLLERS ---------- 9

INSTALLATION GUIDE ---------- 11

PROTECT FUNCTIONS ---------- 13

NORMAL MALFUNCTION REMOVAL ---------- 14

SAFTY INSTRUCTIONS

⚠ WARNING

- 208-230 volts may cause serious injury from electric shock. Disconnect electrical power before starting installation or servicing. Leave power disconnected until installation/service is completed.
- Don't roll or damage the power cord when install or move the machine
- Don't put finger or any other rod like object into the machine

⚠ CAUTION

- Do not tilt the machine more than 45 ° in moving or installation to avoid damage to the compressor.
- Working temperature scope of the machine is 5 ℃ ~ 38 ℃.
- The room temperature will go up around 3℃ from compressor heat dissipation when dehumidifier running, it's normal phenomenon, please feel free to use.
- It's not necessary to use dehumidifier when the room temperature is below 10℃, the absolute humidity is quite low at this condition.
- Please try to seal environment better to increase the effect of dehumidifier.
- Do not place the machine in the area which may come into contact with water or chemical.
- Do not use any relay, extension line or adapter to connect the power of machine.
- Do not place the machine next to the stove, heater and other equipment will dissipate heat, and area with direct sunlight or wind and rain.
- Do place the plug stably and clean the dust on power line.
- Do not damage or modify the power line, do not repair by yourself and disassemble or modify the machine.
- Do place the drainage tube smoothly for continuously drain.
- Shutdown the equipment and cut power when in malfunction.

SPECIFICATIONS

ENVIRONMENTAL	
Operating Temperature Range	41° F – 100° F
Operating Humidity Range	RH40% - RH95%
MECHANICAL	
Net Weight	458 lbs (without packaging)
Drainage Pipe Size	5/8"
Capacity	750 Pints @ 80° F, 60% RH
Airflow @ 0.0”	1940 CFM (free flow)
ELECTRICAL	
Voltage	208~230 VAC ~, 1ø, 60 HZ
Operating Current	16.0 A @ 80℉ , 60% RH

DIMENSIONS

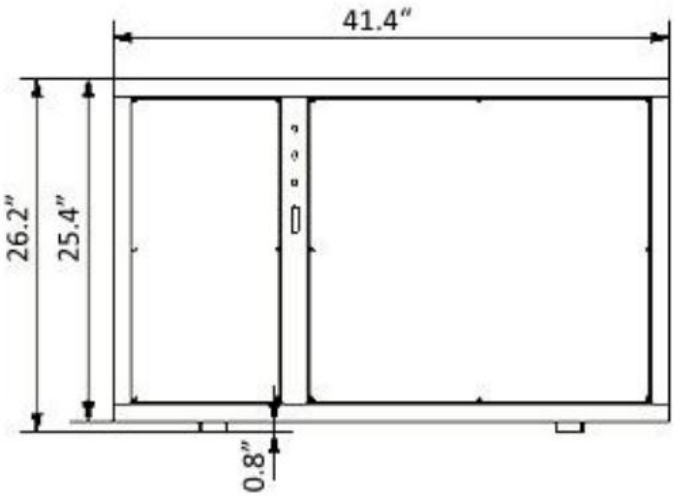

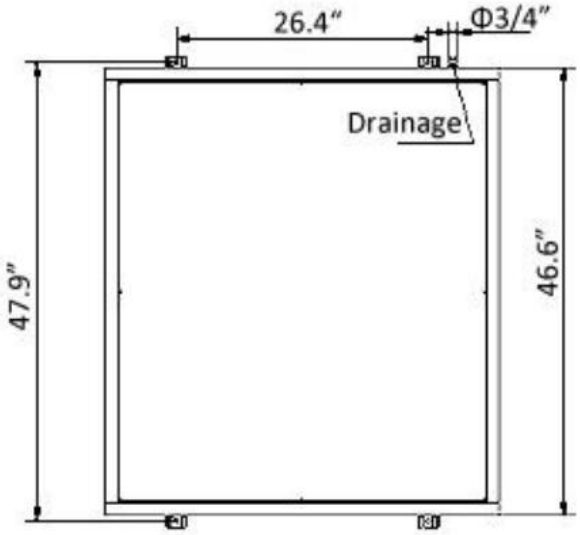

Net Dimensions: L40.6”xW50”xH27.6”
Packed Dimensions: L44.5"xW54"xH33.5"
Net Weight: 458 Lbs
Gross Weight: 480 Lbs

UNPACKING THE DEHUMIDIFIER

Unpack the outer ply-wooden case, and remove the protection film to take out the dehumidifier for installation.

WHAT'S IN THE CASE

Components		QTY
	Dehumidifier	1 pc
	DHD300 Controller	1 pc
	Drianage Pipe	1 pc
	Filter	1 pc
	Power Cord	1 pc
	3rd-party Controller Kits	1 pc
	Instruction Manual	1 pc

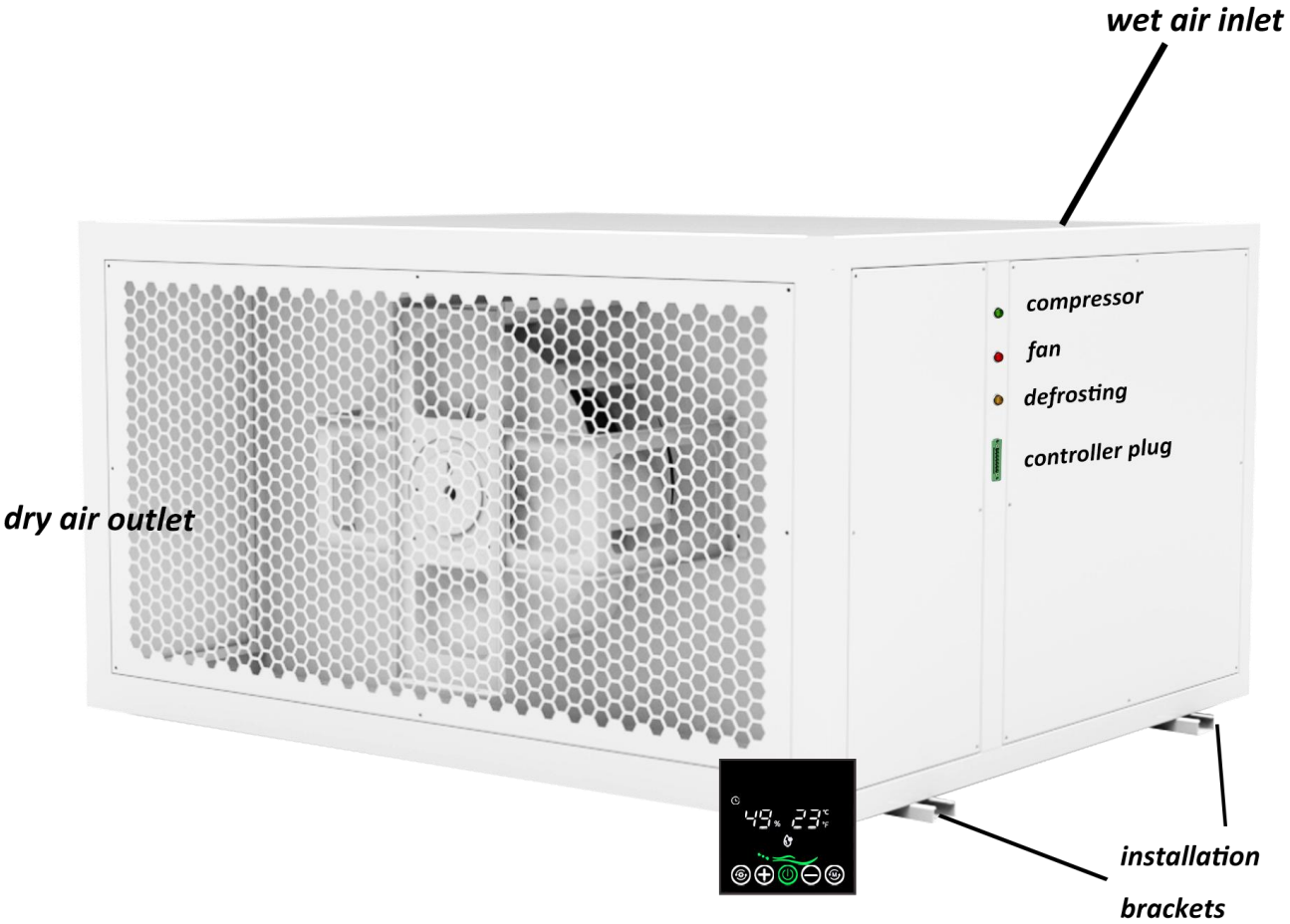

Indicator Lights

There are 3 LED lights stands for different operating mode.

The green light stands for compressor operating mode.

The red light stands for fan operating mode.

The yellow light stands for defrosting mode

OPERATION GUIDE

Deumidifying
-Light on when dehumidifying
-Blinking when compressor protecting

Fan
-Light on when fan is working

Humidity
-Light on showing the ambient humidity
-Blinking when setting target humidity

Temperature
-Showing ambient temperature
-Only icon ℃ or ℉ can be displayed at a time

Delay
-Light on when compressor in delay protection

Power: Press once to turn on the unit, press again to turn off

Mode: Press to switch dehumidifying or ventilation mode

Value up: Press once in setting mode to add 1% of target humidity

Value down: Press once in setting mode to minus 1% of target humidity

Setting: Press once to set the target humidity

Definition of external plug
The dehumidifier provides 7 pin plug for external controller.

1 = float
2 = float
3 = dehumidifying for both fan and compressor control
4 = +24V power
5 = fan control
6 = -0v power. Common
7 = spare

The 4 and 6 terminal will provide 24V DC with 40VA. This 24V DC power source can be used for both 24V DC and AC controller.

Controller DHD300 is provided with dehumidifier

EXTERNAL CONTROLLERS

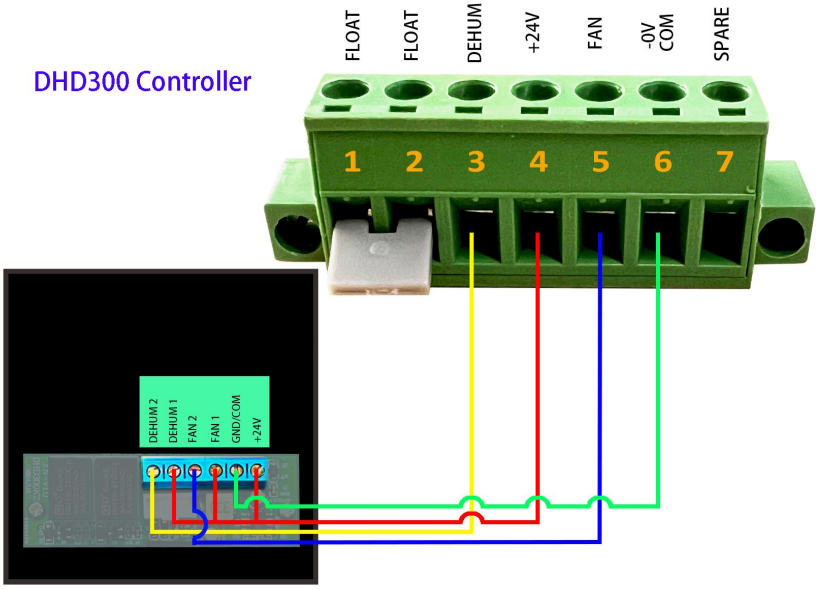

Connectiing the DHD300 digital control to the plug using a 4-core cable as the circuit diagram shows.

Each unit comes equipped with a pre-assembled cable connecting the digital control to the plug. Simply insert the plug into the dehumidifier to operate the device.

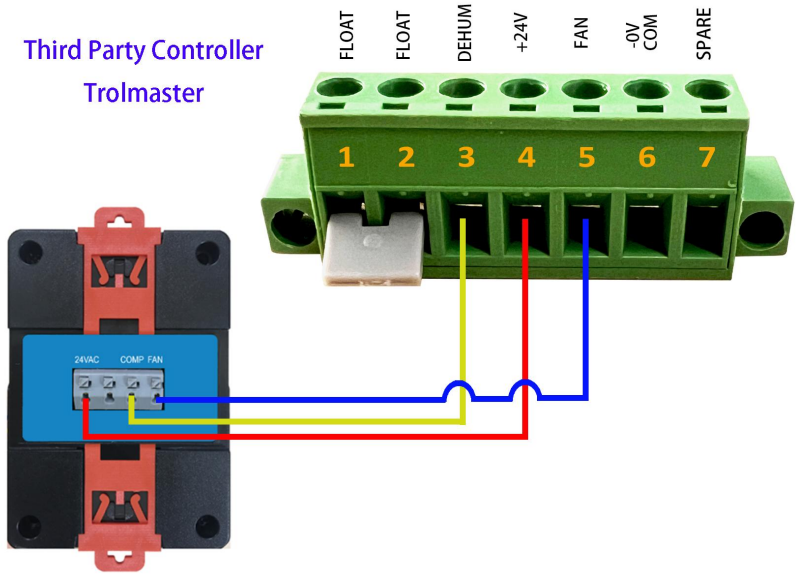

Connecting the external port pins as shown in the diagram using a 3-core cable: Pin 3 to 'COMP', Pin 3 to 24V, and Pin 5 to 'FAN'. This configuration enables the TrolMaster controller to regulate the dehumidification and ventilation functions of the dehumidifier.

PREPARING BEFORE INSTALLATION

A.Do disconnect the plug from power outlet to ensure safety.
B.Make sure the power and drain tunnel
C.Prepare necessary tools like screwdriver, thread rod, spanner etc.

START INSTALLATION

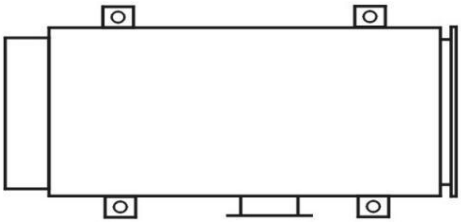

TOP VIEW

A.Drill four fixing holes on the ceiling according to the position of install hole on the machine, then install the expansion screw to fix the thread rod.

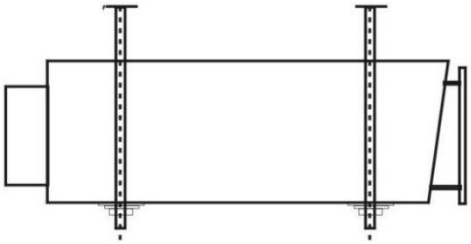

SIDE VIEW

B.Install dehumidifier through the four thread rods, and adjust the height according the space to ensure the machine on horizontal level.
C.Connect the drain tube to make sure no leakage, no block in the drainage tube.
D.Connect power, please make sure the power supply is 208~240v/60hz. And the overload air break switch should be used.

⚠ CAUTION IN INSTALLATION

1.Ensure necessary safety measures to avoid incident, electrical must be shut off during the installation process.
2.Use the strength four thread rods with corresponding screws to fix the dehumidifier on the ceiling.
3.Ensure the installation of dehumidifier is horizontal to avoid malfunction or leakage.
4.Ensure drain tube is installed unhindered without overmuch bends.
5.Ensure dehumidifier is installed within space with proper air circulation for air inlet and air outlet, it is prohibited to install at corner or space with obstructions what block the inlet or outlet.

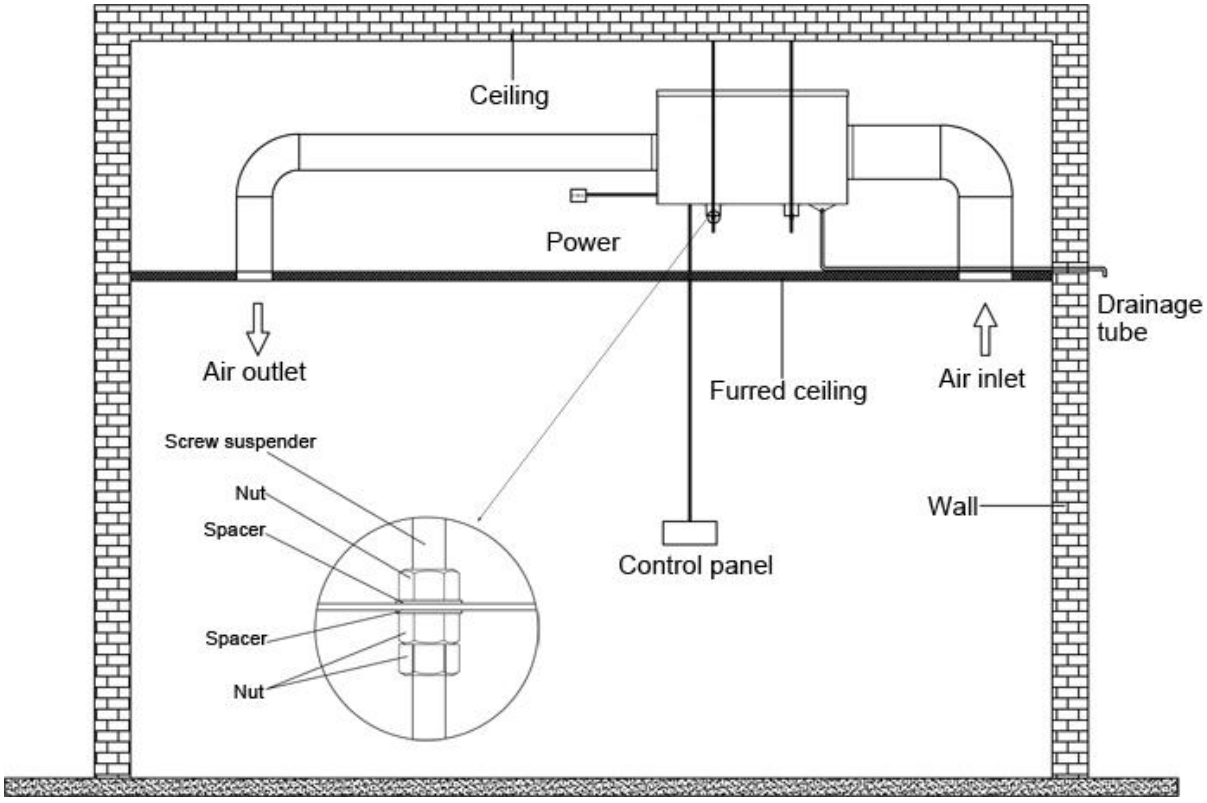

Automatic defrost protection function

The dehumidifier will defrost automatically when freezing occurs. While defrosting, the compressor will not work but the brushless fan will continue to run in order to melt the ice on coil inside.Defrosting light will be on. Dehumidifier will start automatically once defrost process is complete. Default defrost setting may occurs when ambient temperature is under 15℃.

Compressor delay start protection function

Manual restart of system within 3 minutes of shutdown, the compressor will start up within 3 minutes of delay protection.

⚠ **(Note, frequent restarting dehumidifier will be harmful to compressor. In this case the 3 minutes compressor delay protection will be an essential part of the machine.)**

NORMA MALFUNCTION REMOVAL

MALFUNCTIONS	ANALYZE	REMOVAL
DEHUMIDIFIER IS NOT WORKING	• POWER FAILURE • POWER OFF • POWER IS NOT PLUG IN • BLOWN FUSE	• RESUME POWER • POWER ON • PLUG IN • REPLACE FUSE
BAD DEHUMIDIFICATION EFFECT	• FILTER BLOCKED WITH DUST • AIR INLET IS BLOCKED • USED IN BAD SEALED ROOM • LESS REFRIGERANT	• WASH FILTER • REMOVE BLOCK • CLOSE DOOR AND WINDOWN • FILL REFRIGERANT OR CONTACT WITH MANUFACTURER
LEAKAGE	• MACHINE IS NOT HORIZONTAL • DRAIN TUBE IS BLOCKED	• PLACE THE MACHINE HORZONTAL • WASH OR CHANGE THE TUBE
NOISE	• MACHINE IS NOT INSTALLED STABLE • FILTER BLOCKED	• PLACE THE MACHINE STABLE • WASH THE FILTER

REMARKS

1.Please contact manufacturer or agent to maintain the malfunction that cannot be confirmed and removed, don’t disassemble the machine by yourself

2.It will produce noise when the dehumidifier power on or power off, it’s normal.

3.It will produce heat wind at the air outlet, it’s normal

EAST Dehumidifier Manufacturer
Room 2413,5th Building No 99, Wangzhou Road, Yuhang District, Hangzhou,311113 Zhejiang, China
Phone: +8613685770742
WhatsApp: +8613685770742
https://www.eastdehumidifier.com