+86(0)571-88612325
+86(0)571-88612503
info@quanhom.com
www.quanhom.com
6F,Bld 1,NO.77 Lianchuang Rd,311121,Hangzhou

GCZ42511D 25-100mm f/0.9-1.1 Continuous Zoom Infrared Lens

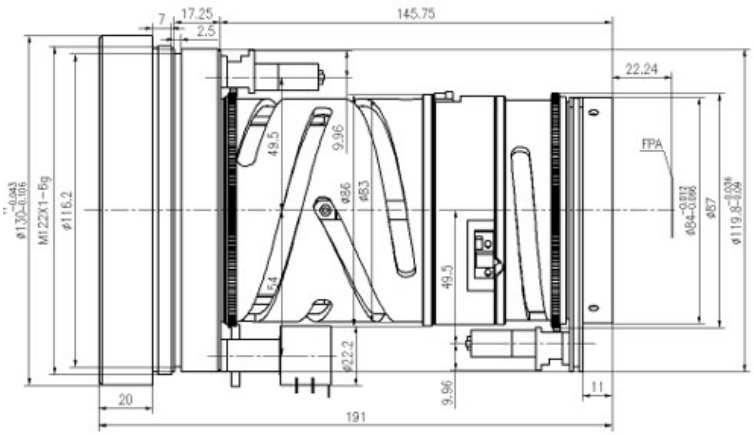

HFOV	160x120	320x240	336x256	384x288	640x480	640x512	1024x768	1280x1024
25μm	2.3°-9.1°	4.6°-18.2°	4.8°-19.1°	5.5°-21.7°				
17μm	1.6°-6.2°	3.1°-12.4°	3.3°-13°	3.7°-14.9°	6.2°-24.6°	6.2°-24.6°		
12μm	1.1°-4.4°	2.2°-8.8°	2.3°-9.2°	2.6°-10.5°	4.4°-17.5°	4.4°-17.5°		

Optical	
Focal Length(mm)	25-100
F/#	0.9-1.1
Wavelength	8-12μm
Focus Range	3m-Infinity
Format	Ø16.8
Mechanical	
Interface	Flange
Focus Mechanism	Motorized
Dimensions (mm)	Ø130x191
Weight	1.187kg
Electrical & Communications	
Power Input	DC 6-12V
Communications	NA
Environmental	
Operating Temperature	-40°C to +60°C
Storage Temperature	-40°C to +80°C
Front Element Sealing	IP67
External Coating	DLC