+86(0)571-88612325
+86(0)571-88612503
info@quanhom.com
www.quanhom.com
6F,Bld 1,NO.77 Lianchuang Rd,311121,Hangzhou

GLA7510 75mm f/1.0 Optical Athermalized Infrared Lens

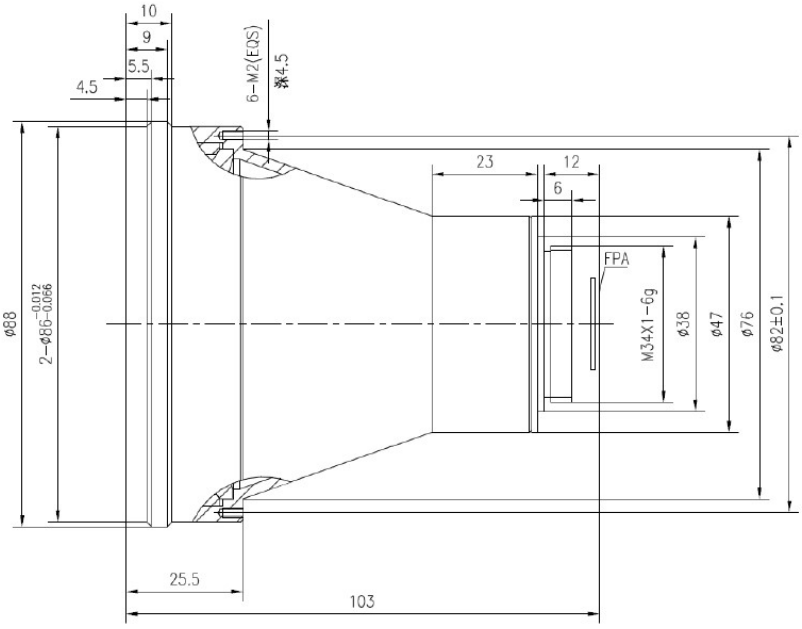

HFOV	160x120	320x240	336x256	384x288	640x480	640x512	1024x768	1280x1024
25μm	3.1 °	6.1 °	6.4 °	7.3 °				
17μm	2.1 °	4.2 °	4.4 °	5.0 °	8.3 °	8.3 °		
12μm	1.5 °	2.9 °	3.1 °	3.5 °	5.9 °	5.9 °		

Optical	
Focal Length	75mm
F/#	1.0
Average Transmission	≥ 85%
Detector	640x512,17μm
Wavelength	8-12μm
Format	Ø14
Mechanical	
Interface	Thread M34X1.0 (M34X0.75 Optional)
Focus Mechanism	Fixed Athermalized
Dimensions (mm)	Ø88x97.3
Weight	< 480g
Environmental	
Sealing	IP 67
Operating Temperature	-40°C to +80°C
Storage Temperature	-60°C to +110°C
External Coating	AR/DLC