新达
CYNDAR

QRFT specification selection table

广州市新达电子科技有限公司
Guangzhou Cyndar Electronic Technology Co., Ltd.

CYNDAR®

◆QRFT安全光幕 Safety light curtain

◆分辨率 Resolving power

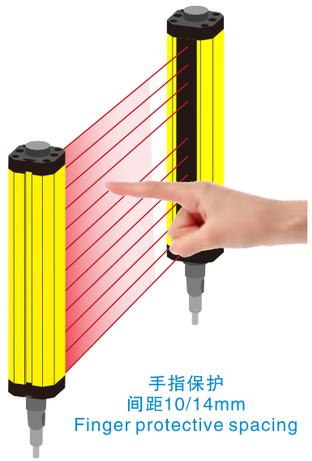

手指保护
间距10/14mm
Finger protective spacing

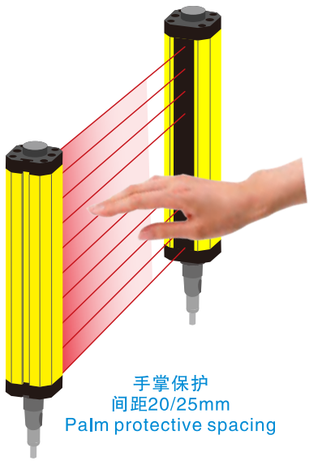

手掌保护
间距20/25mm
Palm protective spacing

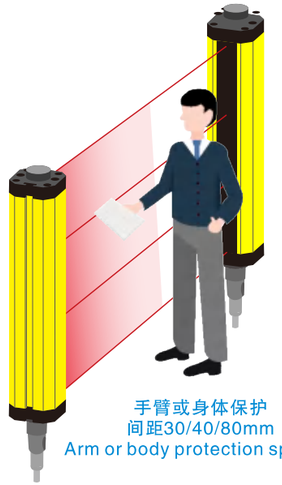

手臂或身体保护
间距30/40/80mm
Arm or body protection spacing

◆产品配置 Product configuration

控制器、发光器、受光器、传输线和电源线组成。
The controller, the light emitter, the light receiver,
the transmission line and the power line are composed.

◆产品特点 Product characteristics

- ★ 自检功能完善：当安全传感器出现故障时，确保不向所控制的电器发送错误的信号；
- ★ 抗干扰能力强：系统对电磁信号，频闪灯光，焊接弧光及周围的光源具有良好的抗干扰能力；
- ★ 安装调试方便，配线简单，外形美观；
- ★ 采用表面贴装技术，防震性能优越；
- ★ 符合国际电工学会IEC61496-1/2标准安全等级，TUV的CE认证；
- ★ 响应时间短（≤15ms）,安全可靠性能高；

304不锈钢螺丝
密封部分全部采用密封圈

IP68级防水安全光幕
304 stainless steel screw,
sealing part all adopt sealing ring,
IP68 class waterproof safety light curtain

- ★ 尺寸设计36mm*36mm,安全传感器可以通过航空插座与电缆线(M12)链接；
- ★ 所有电子元器件均采用全球知名品牌配件。
- ★ Perfect self–check function: When the safety screen protector fails, ensure that the wrong signal is not sent to the controlled electrical appliances.
- ★ Strong anti–interference ability: The system has good anti–interference ability to electromagnetic signal, stroboscopic light, welding arc and surrounding light source;
- ★ Easy installation and debugging, simple wiring, beautiful appearance;
- ★ Surface mounting technology is adopted, which has superior seismic performance.
- ★ It conforms to IEC61496–1/2 standard safety grade and TUV CE certification.
- ★ The corresponding time is short (≤15ms), and the safety and reliability performance is high.
- ★ The dimension design is 36mm*36mm. The safety sensor can be connected to the cable (M12) through the air socket.
- ★ All electronic components adopt world–renowned brand accessories.

◆ 产品技术参数 Technical parameters of products

光幕形式 Light curtain form	对射式Counter shooting					
光轴间距 Beam pitch	10mm	14mm	20mm	25mm	30mm	40mm
检测精度 Check the accuracy	18mm	22mm	28mm	33mm	38mm	48mm
光束数 Beam number	6、8···32	6、8···32	4、6···32	6、8···32	4、6···32	4、6···32
保护高度 Height of protection	光轴间距Beam pitch X (光束数Beam number–1)					
检测距离 Detection distance	30～3000mm 、30~6000mm					
响应时间 Response time	≤15ms					
抗光干扰 Anti light interference	10000Lux(入射角Incidence angle≥5°)					
外形尺寸 Outline size	36x36xLmm(L为发光器/受光器长度L is the length of light emitter/receiver)					
防护等级 Protection level	IP65					
控制器 Controller	QCA QCA2					
电源电压 Supply voltage	DC12/24V AC110–220V(继电器输出Relay output)					
消耗电流 Consumption current	≤200mA					
输出 Output	NPN/PNP型，灌入电流500mA，电压1.5v以下，极性、短路、过载保护 NPN/PNP type, with current 500 mA and voltage less than 1.5 v, polarity, short circuit and overload protection					
输出状态 Output state	ON（接收指示绿灯Receiving Indicator Green Light)					
指示灯 Indicator light	投光器：电源指示灯（红色）；受光器：输出指示灯 通光（绿色）遮光（红色） Projector: Power indicator (red); Receiver: Output indicator (green) shading (red)					
光源 Light source	调制红外LED Modulated Infrared LED					
连接方式 Connection mode	圆形航空插座，配专用连接电缆，投光器4芯，受光器5芯 Circular aviation socket with special connecting cable, 4 cores of projector and 5 cores of receiver					
壳体材料 Shell material	铝合金，端盖：ABS增强尼龙 Aluminum alloy, end cover: ABS reinforced nylon					
耐环境光 Environmental light resistance	白炽光：受光面照度3000Lx；太阳光：受光面照度10000Lx Incandescent light: illumination of the receiving surface 3000Lx; sunlight: illumination of the receiving surface 10000Lx					
环境温度 Ambient temperature	工作时：–10~+40℃(但不结冰),保存时:–25~+55℃ When working: – 10 ~ + 40 C (but not freezing), when preserved: – 25 ~ + 55 C					
环境湿度 Ambient humidity	工作时：35~85%RH,保存时:35~95%RH Work: 35–85% RH, save: 35–95% RH					

CYNDAR®

QRFT 规格一览表 Specification List

形状 Shape

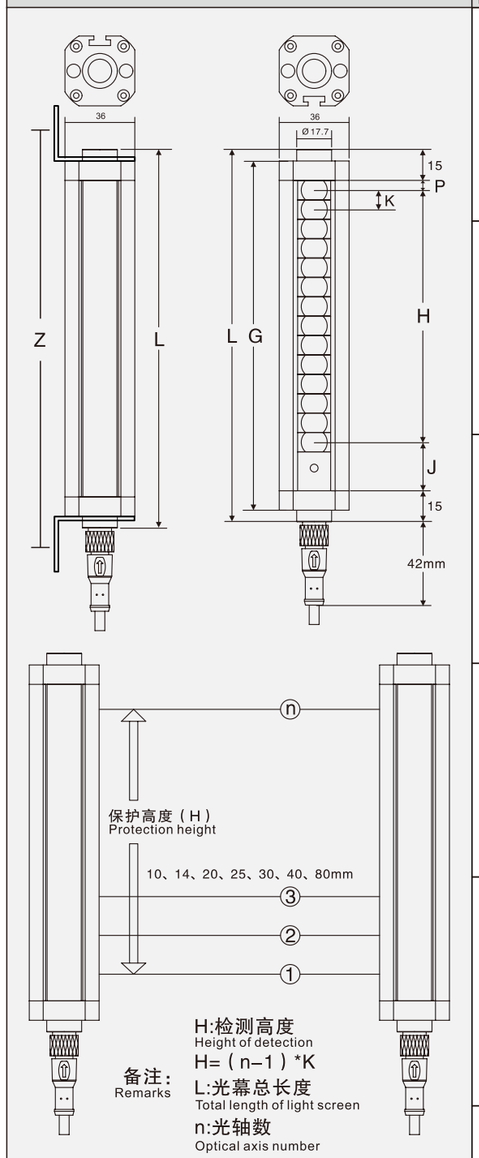

上下直角架固定方式中心距离
Center Distance of Fixed Mode of Upper and Lower Right Angle Frames

Z=L+34mm
L=P+H+J+15mm+15mm

K(mm)	10	14	20	25	30	40	80
P(mm)	5	7	10	12.5	15	20	40
J(mm)	32	32	25	25	25	25	25

光轴间距 Beam pitch	光束 Light beam	有效保护高度mm（H） Effective protection height	光幕高度 mm(L) Screen height	产品型号 Product model	信号输出方式 Signal Output Mode NPN	PNP	NPN	PNP	检测距离 Detection distance
10 mm (K)	6	50	117	QRFT06/10-50	A	B	C	D	0.3-3m
	8	70	137	QRFT08/10-70	A	B	C	D	0.3-3m
	10	90	157	QRFT10/10-90	A	B	C	D	0.3-3m
	12	110	177	QRFT12/10-110	A	B	C	D	0.3-3m
	14	130	197	QRFT14/10-130	A	B	C	D	0.3-3m
	16	150	217	QRFT16/10-150	A	B	C	D	0.3-3m
	18	170	237	QRFT18/10-170	A	B	C	D	0.3-3m
	20	190	257	QRFT20/10-190	A	B	C	D	0.3-3m
	22	210	277	QRFT22/10-210	A	B	C	D	0.3-3m
	24	230	297	QRFT24/10-230	A	B	C	D	0.3-3m
	26	250	317	QRFT26/10-250	A	B	C	D	0.3-3m
	28	270	337	QRFT28/10-270	A	B	C	D	0.3-3m
	30	290	357	QRFT30/10-290	A	B	C	D	0.3-3m
	32	310	377	QRFT32/10-310	A	B	C	D	0.3-3m
14 mm (K)	6	70	139	QRFT06/14-70	A	B	C	D	0.3-3m
	8	98	167	QRFT08/14-98	A	B	C	D	0.3-3m
	10	126	195	QRFT10/14-126	A	B	C	D	0.3-3m
	12	154	223	QRFT12/14-154	A	B	C	D	0.3-3m
	14	182	251	QRFT14/14-182	A	B	C	D	0.3-3m
	16	210	279	QRFT16/14-210	A	B	C	D	0.3-3m
	18	238	307	QRFT18/14-238	A	B	C	D	0.3-3m
	20	266	335	QRFT20/14-266	A	B	C	D	0.3-3m
	22	294	363	QRFT22/14-294	A	B	C	D	0.3-3m
	24	322	391	QRFT24/14-322	A	B	C	D	0.3-3m
	26	350	419	QRFT26/14-350	A	B	C	D	0.3-3m
	28	378	447	QRFT28/14-378	A	B	C	D	0.3-3m
	30	406	475	QRFT30/14-406	A	B	C	D	0.3-3m
	32	434	503	QRFT32/14-434	A	B	C	D	0.3-3m
20 mm (K)	4	60	125	QRFT04/20-60	A	B	C	D	0.3-3m
	6	100	165	QRFT06/20-100	A	B	C	D	0.3-3m
	8	140	205	QRFT08/20-140	A	B	C	D	0.3-3m
	10	180	245	QRFT10/20-180	A	B	C	D	0.3-3m
	12	220	285	QRFT12/20-220	A	B	C	D	0.3-3m
	14	260	325	QRFT14/20-260	A	B	C	D	0.3-3m
	16	300	365	QRFT16/20-300	A	B	C	D	0.3-3m
	18	340	405	QRFT18/20-340	A	B	C	D	0.3-3m
	20	380	445	QRFT20/20-380	A	B	C	D	0.3-3m
	22	420	485	QRFT22/20-420	A	B	C	D	0.3-3m
	24	460	525	QRFT24/20-460	A	B	C	D	0.3-3m
	26	500	565	QRFT26/20-500	A	B	C	D	0.3-3m
	28	540	605	QRFT28/20-540	A	B	C	D	0.3-3m
	30	580	645	QRFT30/20-580	A	B	C	D	0.3-3m
	32	620	685	QRFT32/20-620	A	B	C	D	0.3-3m
25 mm (K)	6	125	192.5	QRFT06/25-125	A	B	C	D	0.3-3m
	8	175	242.5	QRFT08/25-175	A	B	C	D	0.3-3m
	10	225	292.5	QRFT10/25-225	A	B	C	D	0.3-3m
	12	275	342.5	QRFT12/25-275	A	B	C	D	0.3-3m
	14	325	392.5	QRFT14/25-325	A	B	C	D	0.3-3m
	16	375	442.5	QRFT16/25-375	A	B	C	D	0.3-3m
	18	425	492.5	QRFT18/25-425	A	B	C	D	0.3-3m
	20	475	542.5	QRFT20/25-475	A	B	C	D	0.3-3m
	22	525	592.5	QRFT22/25-525	A	B	C	D	0.3-3m
	24	575	642.5	QRFT24/25-575	A	B	C	D	0.3-3m
	26	625	692.5	QRFT26/25-625	A	B	C	D	0.3-3m
	28	675	742.5	QRFT28/25-675	A	B	C	D	0.3-3m
	30	725	792.5	QRFT30/25-725	A	B	C	D	0.3-3m
	32	775	842.5	QRFT32/25-775	A	B	C	D	0.3-3m
30 mm (K)	4	90	160	QRFT04/30-90	A	B	C	D	0.3-3m
	6	150	220	QRFT06/30-150	A	B	C	D	0.3-3m
	8	210	280	QRFT08/30-210	A	B	C	D	0.3-3m
	10	270	340	QRFT10/30-270	A	B	C	D	0.3-3m
	12	330	400	QRFT12/30-330	A	B	C	D	0.3-3m
	14	390	460	QRFT14/30-390	A	B	C	D	0.3-3m
	16	450	520	QRFT16/30-450	A	B	C	D	0.3-3m
	18	510	580	QRFT18/30-510	A	B	C	D	0.3-3m
	20	570	640	QRFT20/30-570	A	B	C	D	0.3-3m
	22	630	700	QRFT22/30-630	A	B	C	D	0.3-3m
	24	690	760	QRFT24/30-690	A	B	C	D	0.3-3m
	26	750	820	QRFT26/30-750	A	B	C	D	0.3-3m
	28	810	880	QRFT28/30-810	A	B	C	D	0.3-3m
	30	870	940	QRFT30/30-870	A	B	C	D	0.3-3m
	32	930	1000	QRFT32/30-930	A	B	C	D	0.3-3m
40 mm (K)	4	120	195	QRFT04/40-120	A	B	C	D	0.3-3m
	6	200	275	QRFT06/40-200	A	B	C	D	0.3-3m
	8	280	355	QRFT08/40-280	A	B	C	D	0.3-3m
	10	360	435	QRFT10/40-360	A	B	C	D	0.3-3m
	12	440	515	QRFT12/40-440	A	B	C	D	0.3-3m
	14	520	595	QRFT14/40-520	A	B	C	D	0.3-3m
	16	600	675	QRFT16/40-600	A	B	C	D	0.3-3m
	18	680	755	QRFT18/40-680	A	B	C	D	0.3-3m
	20	760	835	QRFT20/40-760	A	B	C	D	0.3-3m
	22	840	915	QRFT22/40-840	A	B	C	D	0.3-3m
	24	920	995	QRFT24/40-920	A	B	C	D	0.3-3m
	26	1000	1075	QRFT26/40-1000	A	B	C	D	0.3-3m
	28	1080	1155	QRFT28/40-1080	A	B	C	D	0.3-3m
	30	1160	1235	QRFT30/40-1160	A	B	C	D	0.3-3m
	32	1240	1315	QRFT32/40-1240	A	B	C	D	0.3-3m
80 mm (K)	4	240	352	QRFT04/80-240	A	B	C	D	0.3-3m
	6	400	591	QRFT06/80-400	A	B	C	D	0.3-3m
	...	...	...	...	A	B	C	D	0.3-3m
	32	2480	2671	QRFT32/80-2480	A	B	C	D	0.3-3m

备注：输出方式详见下一页规格说明，如无要求默认为A图。80mm间距及特殊规格可另外订做，检测距离达3米以上需提前说明。

Note: The output mode is detailed in the specifications on the previous page. If there is no requirement, the default is figure A.
The 80mm spacing and special specifications can be customized separately, and the detection distance up to 3M or more needs to be specified in advance.

QRFT 型安全光幕规格表说明如下：
The specifications of QRFT type safety screen are as follows

Q R T F 0 8 / 4 0 — 280 1 D A （QRT08/40-2801DA）

- A：0.3-3m
- B：0.3-6m
- C：0.3-10m

信号输出方式：Signal Output Mode
- A图：NPN 常闭 A:NC
- B图：PNP 常闭 B:PC
- C图：NPN 常开 C:NO
- D图：PNP 常开 D:PO

注:無特殊要求情况下默認爲A圖 Note: The default is figure A without special requirements.

几组输出：Several sets of output
- 1：一组输出（一般情况下不注明）1:A set of outputs (usually not specified)
- 2：两组输出 2:Two sets of output

保护高度280 Protection height

光轴间距：Beam pitch
- 10-10mm、14-14mm、20-20mm、25-25mm、30-30mm、40-40mm、80mm

光束数：Beam number
- 04、06、08、10、32……

防水等级F：IP68（不需要IP68等级，默认为IP65）
Waterproof Level F: IP68 (No IP68 Level Default QR: Ip65)

型号：QRT 安全光幕
Model: QRT Safety Screen

详细型号请见上一页规格表
Detailed models can be found in the specification sheet on the previous page.

◆ QRFT五芯系列接线图
QRFT Five-core Series Wiring Diagram

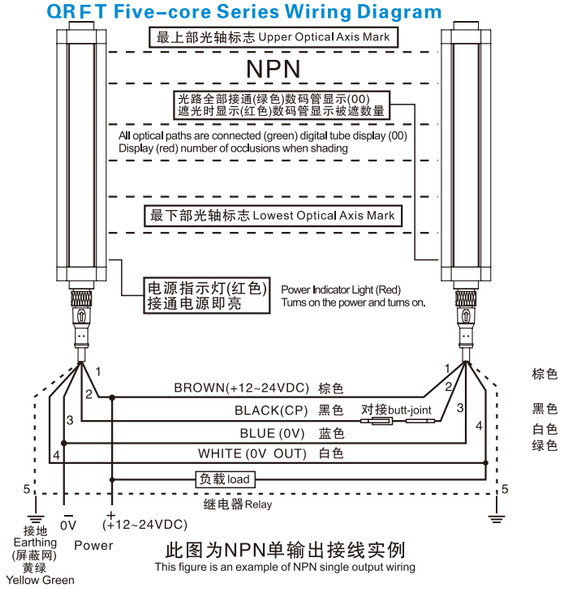

此图为NPN单输出接线实例
This figure is an example of NPN single output wiring

◆ QRFT发射器、接收器七芯接线图
Transmitter and receiver seven-core wiring diagram

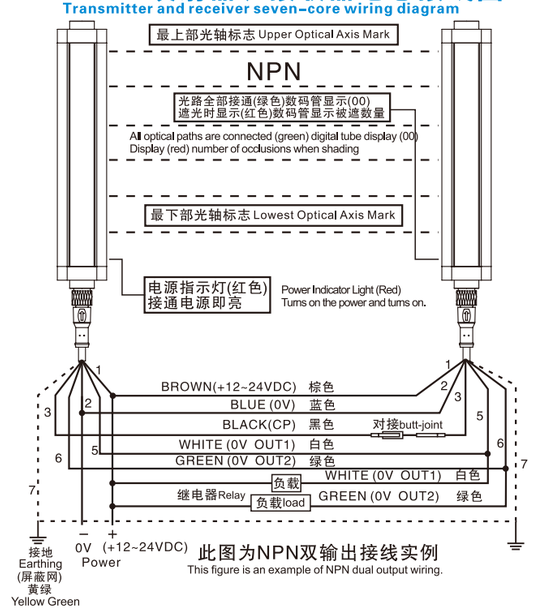

此图为NPN双输出接线实例
This figure is an example of NPN dual output wiring.

◆ QRFT 信号输出选择（晶体管正常工作的实际输出）
QRFT signal output selection (actual output of transistor working normally)

NPN(常闭)NC

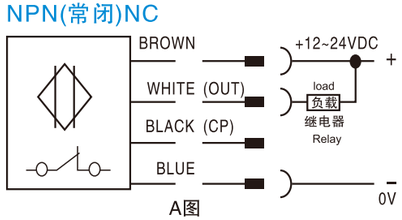

A图

PNP(常闭)PC

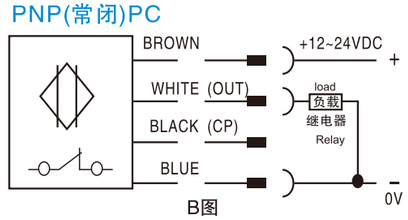

B图

NPN(常开)NO

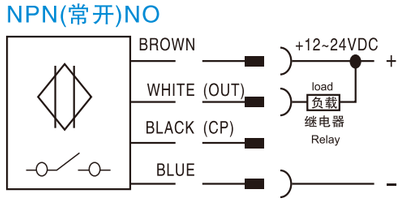

C图

PNP(常开)PO

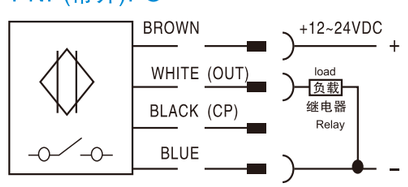

D图