CERTIFICATE

By Authority Of
THE UNITED STATES OF AMERICA
Legally Binding Document

By the Authority Vested By Part 5 of the United States Code § 552(a) and Part 1 of the Code of Regulations § 51 the attached document has been duly INCORPORATED BY REFERENCE and shall be considered legally binding upon all citizens and residents of the United States of America. *HEED THIS NOTICE*: Criminal penalties may apply for noncompliance.

Document Name: ASME B16.9: Factory Made Wrought Steel Buttwelding Fittings

CFR Section(s): 49 CFR 195.118(a)

Standards Body: American Society of Mechnical Engineers

APPROVED

Official Incorporator:
THE EXECUTIVE DIRECTOR
OFFICE OF THE FEDERAL REGISTER
WASHINGTON, D.C.

The American Society of Mechanical Engineers

AN AMERICAN NATIONAL STANDARD

FACTORY-MADE WROUGHT BUTTWELDING FITTINGS

ASME B16.9-2003

(Revision of ASME B16.9-2001)

Copyright © 2004 by the American Society of Mechanical Engineers.
No reproduction may be made of this material without written consent of ASME.

Date of Issuance: February 20, 2004

The next edition of this Standard is scheduled for publication in 2009. There will be no addenda issued to this edition.

ASME issues written replies to inquiries concerning interpretations of technical aspects of this Standard. The interpretations will be included with this edition.

ASME is the registered trademark of The American Society of Mechanical Engineers.

This code or standard was developed under procedures accredited as meeting the criteria for American National Standards. The Standards Committee that approved the code or standard was balanced to assure that individuals from competent and concerned interests have had an opportunity to participate. The proposed code or standard was made available for public review and comment that provides an opportunity for additional public input from industry, academia, regulatory agencies, and the public-at-large.

ASME does not "approve," "rate," or "endorse" any item, construction, proprietary device, or activity.

ASME does not take any position with respect to the validity of any patent rights asserted in connection with any items mentioned in this document, and does not undertake to insure anyone utilizing a standard against liability for infringement of any applicable letters patent, nor assume any such liability. Users of a code or standard are expressly advised that determination of the validity of any such patent rights, and the risk of infringement of such rights, is entirely their own responsibility.

Participation by federal agency representative(s) or person(s) affiliated with industry is not to be interpreted as government or industry endorsement of this code or standard.

ASME accepts responsibility for only those interpretations of this document issued in accordance with the established ASME procedures and policies, which precludes the issuance of interpretations by individuals.

No part of this document may be reproduced in any form,
in an electronic retrieval system or otherwise,
without the prior written permission of the publisher.

The American Society of Mechanical Engineers
Three Park Avenue, New York, NY 10016-5990

Copyright © 2004 by
THE AMERICAN SOCIETY OF MECHANICAL ENGINEERS
All Rights Reserved
Printed in U.S.A.

Copyright © 2004 by the American Society of Mechanical Engineers.
No reproduction may be made of this material without written consent of ASME.

CONTENTS

Foreword iv
Committee Roster v
Correspondence With the B16 Committee vi

1 Scope 1

2 Pressure Ratings 1

3 Size 2

4 Marking 2

5 Material 2

6 Fitting Dimensions 2

7 Surface Contours 3

8 End Preparation 3

9 Design Proof Test 3

10 Production Tests 4

11 Tolerances 4

Figure
1 Maximum Envelope for Welding End Transitions 5

Tables
1 Welding Bevels and Root Face 4
2 Tolerances 6
3 Dimensions of Long Radius Elbows 8
4 Dimensions of Long Radius Reducing Elbows 9
5 Dimensions of Long Radius Returns 10
6 Dimensions of Short Radius Elbows 10
7 Dimensions of Short Radius 180 deg Returns 11
8 Dimensions of Straight Tees and Crosses 11
9 Dimensions of Reducing Outlet Tees and Reducing Outlet Crosses 12
10 Dimensions of Lap Joint Stub Ends 15
11 Dimensions of Caps 16
12 Dimensions of Reducers 17

Mandatory Appendices
I Inch Tables 19
II References 33

Nonmandatory Appendix
A Quality System Program 34

Copyright © 2004 by the American Society of Mechanical Engineers.
No reproduction may be made of this material without written consent of ASME.

FOREWORD

In 1921, the American Engineering Standards Committee, later the American Standards Association (ASA), organized Sectional Committee B16 to unify and further develop national standards for pipe flanges and fittings (and, later, for valves, gaskets, and valve actuators). Cosponsors of the B16 Committee were The American Society of Mechanical Engineers (ASME), the Heating and Piping Contractors National Association [now the Mechanical Contractors Association of America (MCAA)], and the Manufacturers Standardization Society of the Valve and Fittings Industry (MSS). Cosponsors were later designated as cosecretariat organizations.

Standardization of welding fittings was initiated in 1937 by a subgroup (designated Subgroup 6) of Subcommittee 3. After consideration of several drafts, a standard was approved by the Committee, cosponsors, and ASA, and published with the designation ASA B16.9-1940.

Revisions were made in 1950 and 1955 to add sizes up to NPS 24 and to complete coverage of fittings in some sizes. These revisions were approved and published as ASA B16.9-1951 and ASA B16.9-1958. With the subgroup now designated Subcommittee 6 (later Subcommittee F), further revisions were begun to clarify the intent of the standard, to add angularity tolerances, and to include fittings of different types (long radius reducing elbows and crosses) and smaller sizes (NPS $\frac{1}{4}$ and $\frac{1}{2}$). This revision was published as ASA B16.9-1964 after ASA approval.

After reorganization of ASA, first as the United States of America Standards Institute (USASI), then as the American National Standards Institute (ANSI), with the Sectional Committee being redesignated as an American National Standards Committee, another revision increasing the size range to NPS 48 and revising the text for clarity was approved and published as ANSI B16.9-1971.

In 1975, Subcommittee F began a major revision to bring the standard up to date with current practice and usage. Common fractions were expressed as decimals (but without intending higher precision) and metric dimensional equivalents were added. Provisions for step-wise change of radius for NPS $\frac{3}{4}$ long radius elbows and 180 deg returns were introduced. Following Standards Committee, cosecretariat, and ANSI approval, the revision was published as ANSI B16.9-1978. It was updated by a corrective addendum, B16.9a-1981, issued in February 1982.

In 1982, American National Standards Committee B16 was reorganized as an ASME Committee operating under procedures accredited by ANSI. In ASME/ANSI B16.9-1986, the text was revised and inch dimensions were established as the standard.

In 1991, the Subcommittee reviewed the document and made a number of revisions that were included in ASME B16.9-1993. Dimensions for short pattern lap joints were also added.

In ASME B16.9-2001, short radius elbows and returns were added, which included all dimensions and tolerances of ASME B16.28-1994. Metric units were provided as an independent but parallel alternative standard to U.S. customary units and a Quality System Program appendix was added.

In 2003, the Subcommittee reviewed the document and made a number of revisions. The scope of the standard was changed to permit fabricated lap joint stub ends employing circumferential or intersection welds.

This Standard was approved as an American National Standard on October 15, 2003 and December 31, 2003.

Copyright © 2004 by the American Society of Mechanical Engineers.
No reproduction may be made of this material without written consent of ASME.

ASME B16 COMMITTEE
Standardization of Valves, Flanges, Fittings, and Gaskets

(The following is the roster of the Committee at the time of approval of this Standard.)

OFFICERS

H. R. Sonderegger, *Chair*
M. L. Nayyar, *Vice Chair*
P. A. Reddington, *Secretary*

COMMITTEE PERSONNEL

W. B. Bedesem, ExxonMobil Research & Engineering Co.
M. A. Clark, Nibco Inc.
A. Cohen, Arthur Cohen & Associates
C. E. Floren, Mueller Co.
D. R. Frikken, Consultant
A. Hamilton, ABS Americas
M. L. Henderson, Forgital USA
G. A. Jolly, Vogt Valves/Flowserve
M. Katcher, Haynes International
W. G. Knecht, Consultant
R. Koester, The William Powell Co.
R. D. Manning, U.S. Coast Guard
W. N. McLean, Newco Valves
T. A. McMahon, Fisher Controls International Inc.
M. L. Nayyar, Bechtel Power Corp.
J. D. Page, U.S. Nuclear Regulatory Commission
P. A. Reddington, The American Society of Mechanical Engineers
R. A. Schmidt, Trinity-Ladish
H. R. Sonderegger, Anvil International, Inc.
W. M. Stephan, Flexitallic LP
T. F. Stroud, Ductile Iron Pipe Research Association
R. E. White, Richard E. White & Associates PC
D. A. Williams, Southern Co. Services

SUBCOMMITTEE F — STEEL THREADED AND WELDED FITTINGS

G. A. Jolly, *Chair,* Vogt Valves/Flowserve
A. J. Roby, *Secretary,* The American Society of Mechanical Engineers
A. Appleton, Alloy Stainless Product Co. Inc.
G. A. Cuccio, Capital Manufacturing Co.
J. P. Ellenberger, WFI International
D. R. Frikken, Consultant
R. C. Lafferty, Penna Machine Works Inc.
D. C. Monroe, Consultant
R. A. Schmidt, Trinity-Ladish
H. R. Sonderegger, Anvil International Inc.
K. Umemura, Japan Fittings Association

Copyright © 2004 by the American Society of Mechanical Engineers.
No reproduction may be made of this material without written consent of ASME.

CORRESPONDENCE WITH THE B16 COMMITTEE

General. ASME Standards are developed and maintained with the intent to represent the consensus of concerned interests. As such, users of this Standard may interact with the Committee by requesting interpretations, proposing revisions, and attending Committee meetings. Correspondence should be addressed to:

Secretary, B16 Standards Committee
The American Society of Mechanical Engineers
Three Park Avenue
New York, NY 10016-5990

Proposing Revisions. Revisions are made periodically to the Standard to incorporate changes that appear necessary or desirable, as demonstrated by the experience gained from the application of the Standard. Approved revisions will be published periodically.

The Committee welcomes proposals for revisions to this Standard. Such proposals should be as specific as possible, citing the paragraph number(s), the proposed wording, and a detailed description of the reasons for the proposal, including any pertinent documentation.

Interpretations. Upon request, the B16 Committee will render an interpretation of any requirement of the Standard. Interpretations can only be rendered in response to a written request sent to the Secretary of the B16 Standards Committee.

The request for interpretation should be clear and unambiguous. It is further recommended that the inquirer submit his/her request in the following format:

Subject:	Cite the applicable paragraph number(s) and the topic of the inquiry.
Edition:	Cite the applicable edition of the Standard for which the interpretation is being requested.
Question:	Phrase the question as a request for an interpretation of a specific requirement suitable for general understanding and use, not as a request for an approval of a proprietary design or situation. The inquirer may also include any plans or drawings which are necessary to explain the question; however, they should not contain proprietary names or information.

Requests that are not in this format will be rewritten in this format by the Committee prior to being answered, which may inadvertently change the intent of the original request.

ASME procedures provide for reconsideration of any interpretation when or if additional information that might affect an interpretation is available. Further, persons aggrieved by an interpretation may appeal to the cognizant ASME Committee or Subcommittee. ASME does not "approve," "certify," "rate," or "endorse" any item, construction, proprietary device, or activity.

Attending Committee Meetings. The B16 Standards Committee regularly holds meetings, which are open to the public. Persons wishing to attend any meeting should contact the Secretary of the B16 Standards Committee.

Copyright © 2004 by the American Society of Mechanical Engineers.
No reproduction may be made of this material without written consent of ASME.

FACTORY-MADE WROUGHT BUTTWELDING FITTINGS

1 SCOPE

1.1 General

This Standard covers overall dimensions, tolerances, ratings, testing, and markings for wrought factory-made buttwelding fittings in sizes NPS ½ through 48 (DN 15 through 1200).

1.2 Special Fittings

Fittings may be made to special dimensions, sizes, shapes, and tolerances by agreement between the manufacturer and the purchaser.

1.3 Fabricated Fittings

Fabricated laterals and other fittings employing circumferential or intersection welds are considered pipe fabrication and are not within the scope of this Standard.

Fabricated lap joint stub ends are exempt from the above restrictions, provided they meet all the requirements of the applicable ASTM material specification listed in para. 5.

1.4 Standard Units

The values stated in either metric or U.S. customary units are to be regarded separately as standard. Within the text, the U.S. customary units are shown in parentheses. The values stated in each system are not exact equivalents; therefore, each system must be used independently of the other. Combining values from the two systems may result in nonconformance with this Standard.

The designation for size is NPS for both metric and customary dimensioned fittings. Fitting pressure rating is associated with the connecting wall thickness of pipe of equivalent size and material.

1.5 References

1.5.1 Referenced Standards. Standards and specifications adopted by reference in this Standard are shown in Mandatory Appendix II. It is not considered practical to identify the specific edition of each standard and specification in the individual references. Instead, the specific edition reference is identified in Mandatory Appendix II. A product made in conformance with a prior edition of referenced standards and in all other respects conforming to this Standard will be considered to be in conformance.

1.5.2 Codes and Regulations. A fitting used under the jurisdiction of the ASME Boiler and Pressure Vessel Code, the ASME Code for Pressure Piping, or a governmental regulation is subject to any limitation of that code or regulation. This includes any maximum temperature limitation, or rule governing the use of a material at low temperature.

1.6 Service Conditions

Criteria for selection of fitting types and materials suitable for particular fluid service are not within the scope of this Standard.

1.7 Welding

Installation welding requirements are outside the scope of this Standard.

1.8 Quality Systems

Nonmandatory requirements relating to the fitting manufacturer's Quality System Program are described in Nonmandatory Appendix A.

1.9 Convention

For the purpose of determining conformance with this Standard, the convention for fixing significant digits where limits (maximum or minimum values) are specified shall be rounded off as defined in ASTM E 29. This requires that an observed or calculated value shall be rounded off to the nearest unit in the last right-hand digit used in expressing the limit. Decimal values and tolerances do not imply a particular method of measurement.

1.10 Pressure Rating Designation

Class, followed by a dimensionless number, is the designation for pressure–temperature ratings. Standardized designations for flanges per ASME B16.5 referenced in this Standard are Classes 150, 300, 600, 900, 1500, and 2500.

2 PRESSURE RATINGS

2.1 Basis of Ratings

The allowable pressure ratings for fittings designed in accordance with this Standard may be calculated as for straight seamless pipe of equivalent material (as shown by comparison of composition and mechanical properties in the respective material specifications) in

Copyright © 2004 by the American Society of Mechanical Engineers.
No reproduction may be made of this material without written consent of ASME.

accordance with the rules established in the applicable sections of ASME B31, Code for Pressure Piping. For the calculation, applicable data for the pipe size, wall thickness, and material that is equivalent to that of the fitting shall be used. Pipe size, wall thickness (or schedule number), and material identity on the fittings are in lieu of pressure rating markings.

2.2 Design of Fittings

The design of fittings shall be established by mathematical analyses (e.g., ASME B16.49 for bends) contained in nationally recognized pressure vessel or piping codes, or at the manufacturer's option by proof testing in accordance with para. 9 of this Standard. In order to meet design or manufacturing requirements, it is expected that some portion of formed fittings may have to be thicker than the pipe wall with which the fitting is intended to be used. The mathematical analyses, if used, may take into account such thicker sections. Records of mathematical analysis and/or successful proof test data shall be available at the manufacturer's facility for inspection by the purchaser.

3 SIZE

NPS, followed by a dimensionless number, is the designation for nominal fitting size. NPS is related to the reference nominal diameter, DN, used in international standards. The relationship is, typically, as follows:

DN	NPS
15	½
20	¾
25	1
32	1¼
40	1½
50	2
65	2½
80	3
100	4

NOTE: For NPS > 4, the equivalence is DN = 25(NPS).

4 MARKING

4.1 Standard Marking

Each fitting shall be permanently marked to show the following:

(a) manufacturer's name or trademark

(b) material identification, either the ASTM or ASME grade designation

(c) schedule number[1] or nominal wall thickness in mm

(d) size — the nominal pipe size (NPS) identification number related to the end connections shall be used

(e) compliance — see para 4.4 for standard and special fitting marking

A manufacturer may supplement these mandatory markings with others, including a DN size designation, but confusion with the required marking shall be avoided.

4.2 Exceptions

Where the size of the fitting does not permit complete marking, the identification marks may be omitted in reverse of the order presented above.

4.3 Depth of Stamping

Where steel stamps are used, care shall be taken so that the marking is not deep enough or sharp enough to cause cracks or to reduce the wall thickness of the fitting below the minimum allowed.

4.4 Compliance

4.4.1 Standard Fittings. That the fitting was manufactured in conformance with this Standard, including all dimensional requirements, is certified by a prefix "WP" in the material grade designation marking.

4.4.2 Special Fittings. That the fitting was manufactured in conformance with this Standard, except that dimensional requirements are as agreed between the purchaser and the manufacturer, is certified by a supplementary suffix to the material grade designation marking as follows:

(a) "S9" applies for fittings in accordance with ASTM A 234, A 403, A 420, and A 815.

(b) "SPLD" applies for fittings in accordance with ASTM B 361, B 363, and B 366.

5 MATERIAL

Wrought fittings covered by this Standard shall be in accordance with ASTM A 234, A 403, A 420, A 815, B 361, B 363, B 366, or the corresponding standard listed in Section II of the ASME Boiler and Pressure Vessel Code. The term *wrought* denotes fittings made of pipe, tubing, plate, or forgings. Fittings made from block forgings may only be supplied subject to agreement between the manufacturer and purchaser. Such fittings need not meet the requirements of para. 7.

6 FITTING DIMENSIONS

6.1 General

This Standard provides for a fixed position for the welding ends with reference to either the centerline of the fittings or the overall dimensions. Dimensional requirements for these fittings are to be found in Tables

[1] Schedule number is a dimensionless number that is widely used as a convenient designation for use in ordering pipe and fittings. It is normally associated with a group of standardized pipe wall thickness. Refer to ASME B36.10M and ASME B36.19M for complete details on pipe schedule numbers.

Copyright © 2004 by the American Society of Mechanical Engineers.
No reproduction may be made of this material without written consent of ASME.

3 through 12 and Tables I2 through I11 of Mandatory Appendix I.

6.2 Special Dimensions

6.2.1 Fatigue Loading. For applications where fatigue loading is a concern, required minimum dimensions shall be furnished by the purchaser.

6.2.2 Bore Diameter. Bore diameters away from the ends are not specified. If special flow path requirements are needed, the bore dimensions shall be specified by the purchaser.

6.2.3 Stub Ends. Service conditions and joint construction often dictate stub end length requirements. Therefore, the purchaser must specify long or short pattern fitting when ordering. [See General Note (c) in Tables 10 and I9.]

7 SURFACE CONTOURS

Where adjacent openings in fittings are not in parallel planes, they shall be joined by a circular arc or radius on the external surfaces. The arc or radius may be terminated in tangents. Except as provided for block forgings (see para. 5), the projected profile of external surfaces of fittings shall not have sharp intersections (corners) and/or collapsed arcs.

8 END PREPARATION

Unless otherwise specified, the details of the welding end preparation shall be in accordance with Table 1. Transitions from the welding bevel to the outside surface of the fitting and from the root face to the inside surface of the fitting lying within the maximum envelope shown in Fig. 1 are at the manufacturer's option, except as covered in Note (5) of Fig. 1 or unless otherwise specifically ordered.

9 DESIGN PROOF TEST

9.1 Required Tests

Proof tests shall be made as set forth in this Standard when the manufacturer chooses proof testing to qualify the fitting design. Unless otherwise agreed upon between the manufacturer and purchaser, the proof test shall be one based on the computed bursting pressure of the fitting and its connecting piping.

Lap joint stub ends are exempt from proof testing because they are used in a flange assembly, which will have different ratings depending on service application.

9.2 Test Assembly

9.2.1 Representative Components. Fittings that are representative of production and selected for test shall be identified as to material, grade, and lot, including heat treatment. They shall be inspected for dimensional compliance to this Standard.

9.2.2 Other Components. Straight seamless or welded pipe sections whose calculated bursting strength is at least as great as the proof test pressure as calculated in para. 9.3 shall be welded to each end of the fitting to be tested. Any internal misalignment greater than 1.5 mm (0.06 in.) shall be reduced by taper boring at a slope not over 1:3. Length of pipe sections for closures shall be as follows:

(a) Minimum length of pipe shall be one pipe O.D. for NPS 14 (DN 350) and smaller.

(b) Minimum length of pipe shall be one-half pipe O.D. for NPS greater than 14 (DN 350).

9.3 Test Procedure

Test fluid shall be water or other liquid used for hydrostatic testing. Hydrostatic pressure shall be applied to the assembly. The test is successful if the assembly withstands, without rupture, 105% of the computed proof test pressure defined below.

$$P = \frac{2St}{D}$$

where

D = specified outside diameter of pipe

P = computed minimum proof test pressure for fitting

S = actual tensile strength of the test fitting, determined on a specimen representative of the test fitting, which shall meet the tensile strength requirements of the applicable material of para. 5

t = nominal pipe wall thickness of the pipe that the fitting marking identifies

NOTE: Any dimensionally consistent system of units may be used.

9.4 Applicability of Test Results

It is not necessary to conduct an individual test of fittings with all combinations of sizes, wall thicknesses, and materials. A successful proof test on one representative fitting may represent others to the extent described in paras. 9.4.1, 9.4.2, and 9.4.3.

9.4.1 Size Range. One test fitting may be used to qualify similarly proportioned fittings with a size range from one-half to twice that for the tested fitting. The test of a nonreducing fitting qualifies reducing fittings of the same pattern. The test of a reducing fitting qualifies reductions to smaller sizes.

9.4.2 Thickness Range. One test fitting may be used to qualify similarly proportioned fittings with t/D ranges from one-half to three times that for the tested fitting.

9.4.3 Material Grades. The pressure retaining capacity of a geometrically identical fitting made of various

Copyright © 2004 by the American Society of Mechanical Engineers.
No reproduction may be made of this material without written consent of ASME.

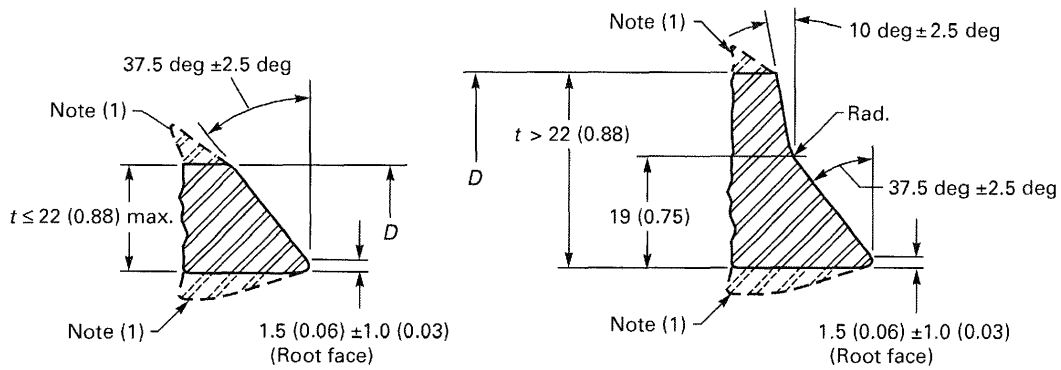

(a) Plain Bevel **(b) Compound Bevel**

Table 1 Welding Bevels and Root Face

Nominal Wall Thickness, *t*	End Preparation
Less than *x* [Note (2)]	Cut square or slightly chamfer, at manufacturer's option (not illustrated)
x to 22 (0.88), inclusive	Plain bevel as in sketch (a) above
More than 22 (0.88)	Compound bevel as in sketch (b) above

GENERAL NOTES:
(a) Dimensions in parentheses are in inches.
(b) Other dimensions are in millimeters.
NOTES:
(1) See para. 8 and Fig. 1 for transition contours.
(2) $x = 5$ (0.19) for carbon steel or ferritic alloy steel and 3 (0.12) for austenitic alloy steel.

grades of steel will be directly proportional to the tensile properties of the various grades; see para 2.1. Therefore, it is necessary to test only a single material grade in a representative fitting to prove the design of the fitting.

10 PRODUCTION TESTS

Hydrostatic testing of wrought fittings is not required by this Standard. All fittings shall be capable of withstanding, without leakage or impairment of serviceability, a hydrostatic test pressure required by the applicable piping code for seamless pipe of material equivalent to the fitting material, and of the size and wall thickness the fitting marking identifies.

11 TOLERANCES

Tolerances for fittings are shown in Tables 2 and I1, and apply to the nominal dimensions given in Tables 3 through 12 and Tables I2 through I11. Where given in the tables, the minimum and maximum dimensions are based on these tolerances. The listings with decimals do not imply precision measurement, such as use of vernier, micrometer, electronic readout equipment, etc.

Copyright © 2004 by the American Society of Mechanical Engineers.
No reproduction may be made of this material without written consent of ASME.

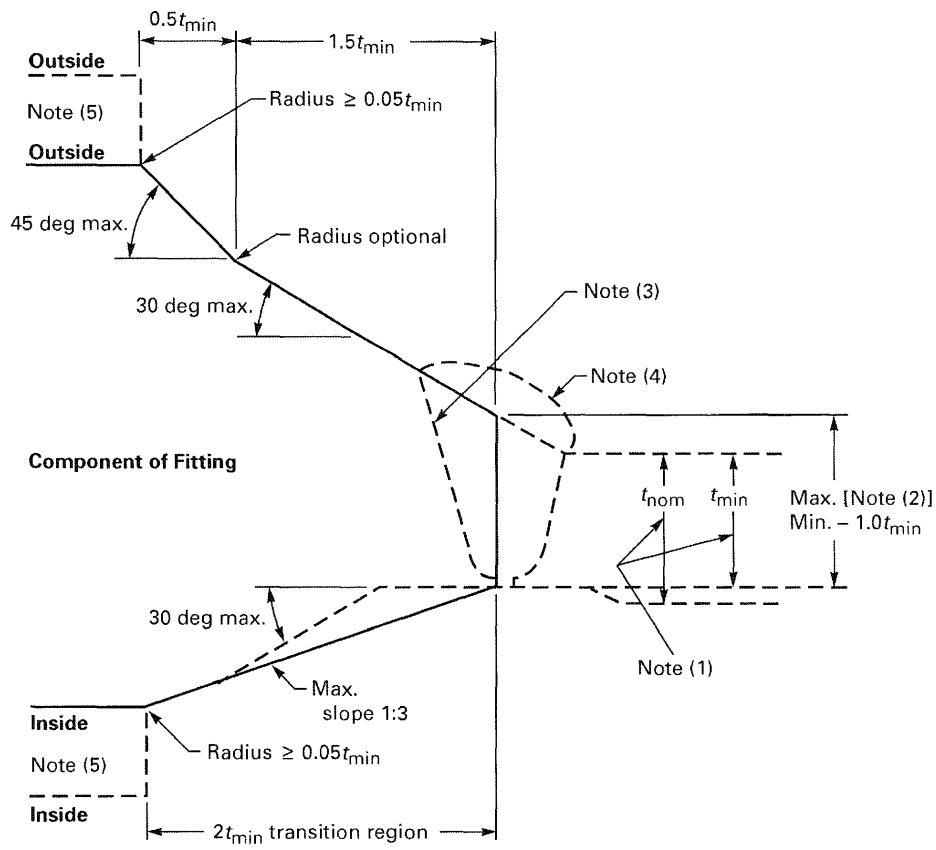

NOTES:

(1) The value of t_{min} is whichever of the following is applicable:

(a) the minimum ordered wall thickness of the pipe, to include pipe that is purchased to a nominal wall thickness with an undertolerance other than 12.5%;

(b) 0.875 times the nominal wall thickness of pipe ordered to a pipe schedule wall thickness that has an undertolerance of 12.5%.

(2) The maximum thickness at the end of the component is:

(a) the greater of [t_{min} + 4 mm (0.16 in.)] or 1.15t_{min} when ordered on a minimum wall basis;

(b) the greater of [t_{min} + 4 mm (0.16 in.)] or 1.10t_{min} when ordered on a nominal wall basis.

(3) Weld bevel shown is for illustration only.

(4) The weld reinforcement permitted by applicable code may lie outside the maximum envelope.

(5) Where transitions using maximum slope do not intersect the inside or outside surfaces within the transition region, as shown by phantom outline, maximum slopes shall be used. Alternatively, radii lying within the envelope may be used.

Fig. 1 Maximum Envelope for Welding End Transitions

Copyright © 2004 by the American Society of Mechanical Engineers.
No reproduction may be made of this material without written consent of ASME.

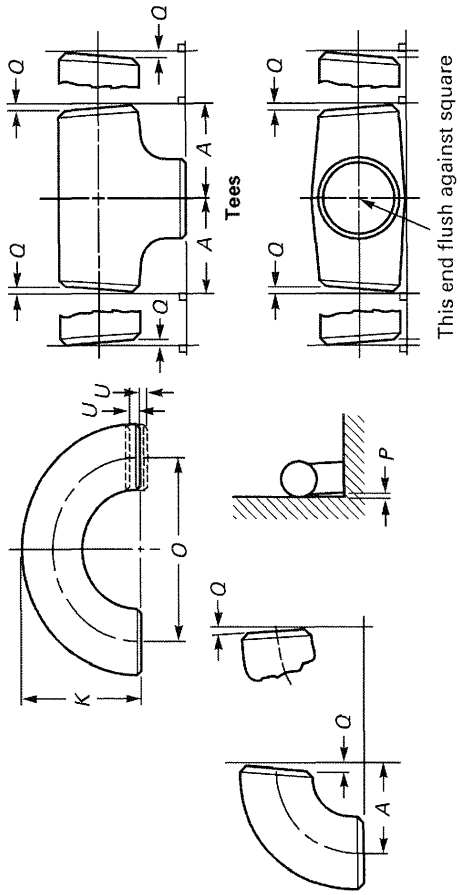

Table 2 Illustration

Copyright © 2004 by the American Society of Mechanical Engineers.
No reproduction may be made of this material without written consent of ASME.

Table 2 Tolerances

All Fittings [Notes (1) and (2)]				Center-to-End Dimensions of 90 deg and 45 deg Elbows and Tees, *A, B, C, M*	Overall Length of Reducers and Lap Joint Stub Ends, *F, H*	Overall Length of Caps, *E*	180 deg Returns		
Nominal Pipe Size (NPS)	DN	Outside Diameter at Bevel, *D* [Notes (3) and (4)]	Inside Diameter at End [Notes (3) and (5)]				Center-to-Center Dimension, *O*	Back-to-Face Dimension, *K*	Alignment of Ends, *U*
½ to 2½	15–65	+1.6, −0.8	0.8	2	2	3	6	6	1
3 to 3½	80–90	1.6	1.6	2	2	3	6	6	1
4	100	1.6	1.6	2	2	3	6	6	1
5 to 8	125–200	+2.4, −1.6	1.6	2	2	6	6	6	1
10 to 18	250–450	+4.0, −3.2	3.2	2	2	6	10	6	2
20 to 24	500–600	+6.4, −4.8	4.8	2	2	6	10	6	2
26 to 30	650–750	+6.4, −4.8	4.8	3	5	10	. . .	. . .	. . .
32 to 48	800–1 200	+6.4, −4.8	4.8	5	5	10	. . .	. . .	. . .

Lap Joint Stub Ends [Note (6)]				
Nominal Pipe Size (NPS)	DN	Outside Diameter of Lap, *G*	Fillet Radius of Lap, *R*	Lap Thickness
½ to 2½	15–65	+0, −1	+0, −1	+1.6, −0
3 to 3½	80–90	+0, −1	+0, −1	+1.6, −0
4	100	+0, −1	+0, −2	+1.6, −0
5 to 8	125–200	+0, −1	+0, −2	+1.6, −0
10 to 18	250–450	+0, −2	+0, −2	+3.2, −0
20 to 24	500–600	+0, −2	+0, −2	+3.2, −0
26 to 30	650–750	. . .	. . .	. . .
32 to 48	800–1 200	. . .	. . .	. . .

		Angularity Tolerances	
Nominal Pipe Size (NPS)	DN	Off Angle, *Q*	Off Plane, *P*
½ to 4	15–100	1	2
5 to 8	125–200	2	4
10 to 12	250–300	3	5
14 to 16	350–400	3	6
18 to 24	450–600	4	10
26 to 30	650–750	5	10
32 to 42	800–1 050	5	13
44 to 48	1 100–1 200	5	19

GENERAL NOTES:

(a) For reference, see Table 2 Illustration on page 6.

(b) All dimensions are in millimeters.

(c) Tolerances are equal plus and minus except as noted.

NOTES:

(1) The inside diameter and the nominal wall thicknesses at ends are to be specified by the purchaser.

(2) A minimum wall thickness of 87.5% applies unless the purchaser specifies a different wall thickness tolerance. See Fig. 1, Note (1)(a).

(3) Out-of-round is the sum of absolute values of plus and minus tolerances.

(4) This tolerance may not apply in localized areas of formed fittings where increased wall thickness is required to meet design requirements of para. 2.2.

(5) Unless otherwise specified by the purchaser, these tolerances apply to the nominal inside diameter, which equals the difference between the nominal outside diameter and twice the nominal wall thickness.

(6) See Table 10 for limiting dimensions of outside diameter of barrel.

Copyright © 2004 by the American Society of Mechanical Engineers.
No reproduction may be made of this material without written consent of ASME.

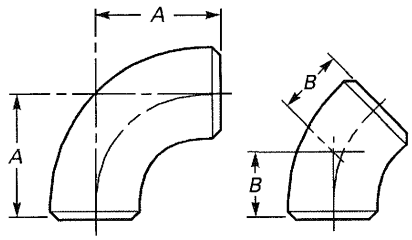

Table 3 Dimensions of Long Radius Elbows

Nominal Pipe Size (NPS)	Outside Diameter at Bevel	Center-to-End	
		90 deg Elbows, *A*	45 deg Elbows, *B*
½	21.3	38	16
¾	26.7	38	19
1	33.4	38	22
1¼	42.2	48	25
1½	48.3	57	29
2	60.3	76	35
2½	73.0	95	44
3	88.9	114	51
3½	101.6	133	57
4	114.3	152	64
5	141.3	190	79
6	168.3	229	95
8	219.1	305	127
10	273.0	381	159
12	323.8	457	190
14	355.6	533	222
16	406.4	610	254
18	457	686	286
20	508	762	318
22	559	838	343
24	610	914	381
26	660	991	406
28	711	1 067	438
30	762	1 143	470
32	813	1 219	502
34	864	1 295	533
36	914	1 372	565
38	965	1 448	600
40	1 016	1 524	632
42	1 067	1 600	660
44	1 118	1 676	695
46	1 168	1 753	727
48	1 219	1 829	759

GENERAL NOTE: All dimensions are in millimeters.

Copyright © 2004 by the American Society of Mechanical Engineers.
No reproduction may be made of this material without written consent of ASME.

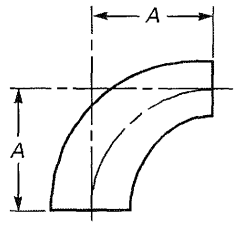

Table 4 Dimensions of Long Radius Reducing Elbows

Nominal Pipe Size (NPS)	Outside Diameter at Bevel		Center-to-End, *A*	Nominal Pipe Size (NPS)	Outside Diameter at Bevel		Center-to-End, *A*
	Large End	Small End			Large End	Small End	
2 × 1½	60.3	48.3	76	10 × 8	273.0	219.1	381
2 × 1¼	60.3	42.2	76	10 × 6	273.0	168.3	381
2 × 1	60.3	33.4	76	10 × 5	273.0	141.3	381
2½ × 2	73.0	60.3	95	12 × 10	323.8	273.0	457
2½ × 1½	73.0	48.3	95	12 × 8	323.8	219.1	457
2½ × 1¼	73.0	42.2	95	12 × 6	323.8	168.3	457
3 × 2½	88.9	73.0	114	14 × 12	355.6	323.8	533
3 × 2	88.9	60.3	114	14 × 10	355.6	273.0	533
3 × 1½	88.9	48.3	114	14 × 8	355.6	219.1	533
3½ × 3	101.6	88.9	133	16 × 14	406.4	355.6	610
3½ × 2½	101.6	73.0	133	16 × 12	406.4	323.8	610
3½ × 2	101.6	60.3	133	16 × 10	406.4	273.0	610
4 × 3½	114.3	101.6	152	18 × 16	457	406.4	686
4 × 3	114.3	88.9	152	18 × 14	457	355.6	686
4 × 2½	114.3	73.0	152	18 × 12	457	323.8	686
4 × 2	114.3	60.3	152	18 × 10	457	273.0	686
5 × 4	141.3	114.3	190	20 × 18	508	457	762
5 × 3½	141.3	101.6	190	20 × 16	508	406.4	762
5 × 3	141.3	88.9	190	20 × 14	508	355.6	762
5 × 2½	141.3	73.0	190	20 × 12	508	323.8	762
				20 × 10	508	273.0	762
6 × 5	168.3	141.3	229				
6 × 4	168.3	114.3	229	24 × 22	610	559	914
6 × 3½	168.3	101.6	229	24 × 20	610	508	914
6 × 3	168.3	88.9	229	24 × 18	610	457	914
				24 × 16	610	406.4	914
8 × 6	219.1	168.3	305	24 × 14	610	355.6	914
8 × 5	219.1	141.3	305	24 × 12	610	323.8	914
8 × 4	219.1	114.3	305	...	...	...	...

GENERAL NOTE: All dimensions are in millimeters.

Copyright © 2004 by the American Society of Mechanical Engineers.
No reproduction may be made of this material without written consent of ASME.

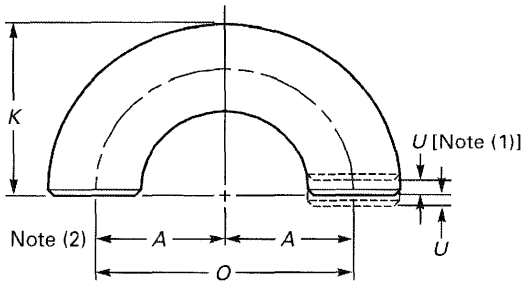

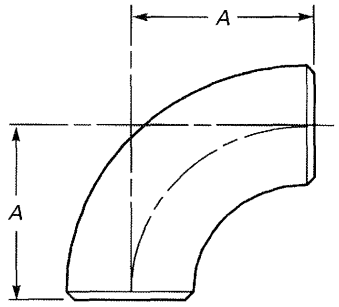

Table 5 Dimensions of Long Radius Returns

Nominal Pipe Size (NPS)	Outside Diameter at Bevel	Center-to-Center, *O*	Back-to-Face, *K*
½	21.3	76	48
¾ [Note (3)]	26.7	76	51
1	33.4	76	56
1¼	42.2	95	70
1½	48.3	114	83
2	60.3	152	106
2½	73.0	190	132
3	88.9	229	159
3½	101.6	267	184
4	114.3	305	210
5	141.3	381	262
6	168.3	457	313
8	219.1	610	414
10	273.0	762	518
12	323.8	914	619
14	355.6	1 067	711
16	406.4	1 219	813
18	457	1 372	914
20	508	1 524	1 016
22	559	1 676	1 118
24	610	1 829	1 219

GENERAL NOTE: All dimensions are in millimeters.

NOTES:

(1) See Table 2 for tolerance for alignment of ends *U*.

(2) Dimension *A* is equal to one-half of dimension *O*.

(3) *O* and *K* dimensions of 57 mm and 43 mm, respectively, may be furnished for NPS ¾ at the manufacturer's option.

Table 6 Dimensions of Short Radius Elbows

Nominal Pipe Size (NPS)	Outside Diameter at Bevel	Center-to-End, *A*
1	33.4	25
1¼	42.2	32
1½	48.3	38
2	60.3	51
2½	73.0	64
3	88.9	76
3½	101.6	89
4	114.3	102
5	141.3	127
6	168.3	152
8	219.1	203
10	273.0	254
12	323.8	305
14	355.6	356
16	406.4	406
18	457	457
20	508	508
22	559	559
24	610	610

GENERAL NOTE: All dimensions are in millimeters.

Copyright © 2004 by the American Society of Mechanical Engineers.
No reproduction may be made of this material without written consent of ASME.

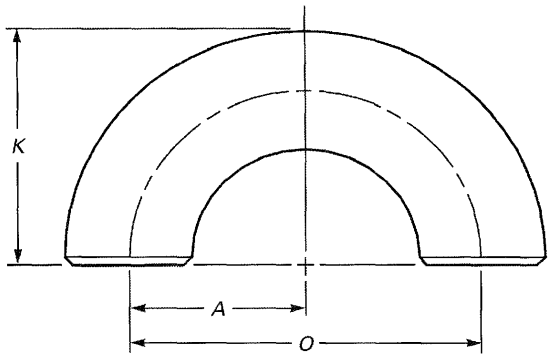

Table 7 Dimensions of Short Radius 180 deg Returns

Nominal Pipe Size (NPS)	Outside Diameter at Bevel	Center-to-Center, *O*	Back-to-Face, *K*
1	33.4	51	41
1¼	42.2	64	52
1½	48.3	76	62
2	60.3	102	81
2½	73.0	127	100
3	88.9	152	121
3½	101.6	178	140
4	114.3	203	159
5	141.3	254	197
6	168.3	305	237
8	219.1	406	313
10	273.0	508	391
12	323.8	610	467
14	355.6	711	533
16	406.4	813	610
18	457	914	686
20	508	1 016	762
22	559	1 118	838
24	610	1 219	914

GENERAL NOTES:
(a) All dimensions are in millimeters.
(b) Dimension *A* is equal to one-half of dimension *O*.

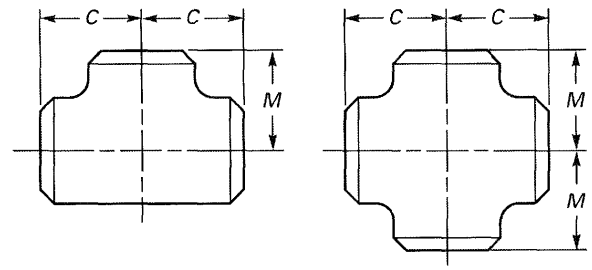

Table 8 Dimensions of Straight Tees and Crosses

Nominal Pipe Size (NPS)	Outside Diameter at Bevel	Center-to-End Run, *C*	Center-to-End Outlet, *M* [Notes (1) and (2)]
½	21.3	25	25
¾	26.7	29	29
1	33.4	38	38
1¼	42.2	48	48
1½	48.3	57	57
2	60.3	64	64
2½	73.0	76	76
3	88.9	86	86
3½	101.6	95	95
4	114.3	105	105
5	141.3	124	124
6	168.3	143	143
8	219.1	178	178
10	273.0	216	216
12	323.8	254	254
14	355.6	279	279
16	406.4	305	305
18	457	343	343
20	508	381	381
22	559	419	419
24	610	432	432
26	660	495	495
28	711	521	521
30	762	559	559
32	813	597	597
34	864	635	635
36	914	673	673
38	965	711	711
40	1 016	749	749
42	1 067	762	711
44	1 118	813	762
46	1 168	851	800
48	1 219	889	838

GENERAL NOTE: All dimensions are in millimeters.

NOTES:
(1) Outlet dimension *M* for NPS 26 and larger is recommended but not required.
(2) Dimensions applicable to crosses NPS 24 and smaller.

Copyright © 2004 by the American Society of Mechanical Engineers.
No reproduction may be made of this material without written consent of ASME.

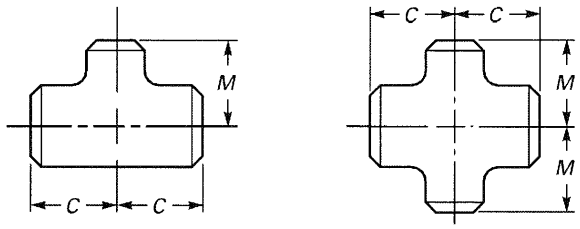

Table 9 Dimensions of Reducing Outlet Tees and Reducing Outlet Crosses

Nominal Pipe Size (NPS)	Outside Diameter at Bevel		Center-to-End	
	Run	Outlet	Run, *C*	Outlet, *M* [Note (1)]
1/2 × 1/2 × 3/8	21.3	17.3	25	25
1/2 × 1/2 × 1/4	21.3	13.7	25	25
3/4 × 3/4 × 1/2	26.7	21.3	29	29
3/4 × 3/4 × 3/8	26.7	17.3	29	29
1 × 1 × 3/4	33.4	26.7	38	38
1 × 1 × 1/2	33.4	21.3	38	38
1 1/4 × 1 1/4 × 1	42.2	33.4	48	48
1 1/4 × 1 1/4 × 3/4	42.2	26.7	48	48
1 1/4 × 1 1/4 × 1/2	42.2	21.3	48	48
1 1/2 × 1 1/2 × 1 1/4	48.3	42.2	57	57
1 1/2 × 1 1/2 × 1	48.3	33.4	57	57
1 1/2 × 1 1/2 × 3/4	48.3	26.7	57	57
1 1/2 × 1 1/2 × 1/2	48.3	21.3	57	57
2 × 2 × 1 1/2	60.3	48.3	64	60
2 × 2 × 1 1/4	60.3	42.2	64	57
2 × 2 × 1	60.3	33.4	64	51
2 × 2 × 3/4	60.3	26.7	64	44
2 1/2 × 2 1/2 × 2	73.0	60.3	76	70
2 1/2 × 2 1/2 × 1 1/2	73.0	48.3	76	67
2 1/2 × 2 1/2 × 1 1/4	73.0	42.2	76	64
2 1/2 × 2 1/2 × 1	73.0	33.4	76	57
3 × 3 × 2 1/2	88.9	73.0	86	83
3 × 3 × 2	88.9	60.3	86	76
3 × 3 × 1 1/2	88.9	48.3	86	73
3 × 3 × 1 1/4	88.9	42.2	86	70
3 1/2 × 3 1/2 × 3	101.6	88.9	95	92
3 1/2 × 3 1/2 × 2 1/2	101.6	73.0	95	89
3 1/2 × 3 1/2 × 2	101.6	60.3	95	83
3 1/2 × 3 1/2 × 1 1/2	101.6	48.3	95	79
4 × 4 × 3 1/2	114.3	101.6	105	102
4 × 4 × 3	114.3	88.9	105	98
4 × 4 × 2 1/2	114.3	73.0	105	95
4 × 4 × 2	114.3	60.3	105	89
4 × 4 × 1 1/2	114.3	48.3	105	86
5 × 5 × 4	141.3	114.3	124	117
5 × 5 × 3 1/2	141.3	101.6	124	114
5 × 5 × 3	141.3	88.9	124	111
5 × 5 × 2 1/2	141.3	73.0	124	108
5 × 5 × 2	141.3	60.3	124	105
6 × 6 × 5	168.3	141.3	143	137
6 × 6 × 4	168.3	114.3	143	130
6 × 6 × 3 1/2	168.3	101.6	143	127
6 × 6 × 3	168.3	88.9	143	124
6 × 6 × 2 1/2	168.3	73.0	143	121
8 × 8 × 6	219.1	168.3	178	168
8 × 8 × 5	219.1	141.3	178	162
8 × 8 × 4	219.1	114.3	178	156
8 × 8 × 3 1/2	219.1	101.6	178	152
10 × 10 × 8	273.0	219.1	216	203
10 × 10 × 6	273.0	168.3	216	194
10 × 10 × 5	273.0	141.3	216	191
10 × 10 × 4	273.0	114.3	216	184
12 × 12 × 10	323.8	273.0	254	241
12 × 12 × 8	323.8	219.1	254	229
12 × 12 × 6	323.8	168.3	254	219
12 × 12 × 5	323.8	141.3	254	216
14 × 14 × 12	355.6	323.8	279	270
14 × 14 × 10	355.6	273.0	279	257
14 × 14 × 8	355.6	219.1	279	248
14 × 14 × 6	355.6	168.3	279	238

Copyright © 2004 by the American Society of Mechanical Engineers.
No reproduction may be made of this material without written consent of ASME.

Table 9 Dimensions of Reducing Outlet Tees and Reducing Outlet Crosses (Cont'd)

Nominal Pipe Size (NPS)	Outside Diameter at Bevel		Center-to-End	
	Run	Outlet	Run, *C*	Outlet, *M* [Note (1)]
16 × 16 × 14	406.4	355.6	305	305
16 × 16 × 12	406.4	323.8	305	295
16 × 16 × 10	406.4	273.0	305	283
16 × 16 × 8	406.4	219.1	305	273
16 × 16 × 6	406.4	168.3	305	264
18 × 18 × 16	457	406.4	343	330
18 × 18 × 14	457	355.6	343	330
18 × 18 × 12	457	323.8	343	321
18 × 18 × 10	457	273.0	343	308
18 × 18 × 8	457	219.1	343	298
20 × 20 × 18	508	457	381	368
20 × 20 × 16	508	406.4	381	356
20 × 20 × 14	508	355.6	381	356
20 × 20 × 12	508	323.8	381	346
20 × 20 × 10	508	273.0	381	333
20 × 20 × 8	508	219.1	381	324
22 × 22 × 20	559	508	419	406
22 × 22 × 18	559	457	419	394
22 × 22 × 16	559	406.4	419	381
22 × 22 × 14	559	355.6	419	381
22 × 22 × 12	559	323.8	419	371
22 × 22 × 10	559	273.0	419	359
24 × 24 × 22	610	559	432	432
24 × 24 × 20	610	508	432	432
24 × 24 × 18	610	457	432	419
24 × 24 × 16	610	406.4	432	406
24 × 24 × 14	610	355.6	432	406
24 × 24 × 12	610	323.8	432	397
24 × 24 × 10	610	273.0	432	384
26 × 26 × 24	660	610	495	483
26 × 26 × 22	660	559	495	470
26 × 26 × 20	660	508	495	457
26 × 26 × 18	660	457	495	444
26 × 26 × 16	660	406.4	495	432
26 × 26 × 14	660	355.6	495	432
26 × 26 × 12	660	323.8	495	422
28 × 28 × 26	711	660	521	521
28 × 28 × 24	711	610	521	508
28 × 28 × 22	711	559	521	495
28 × 28 × 20	711	508	521	483
28 × 28 × 18	711	457	521	470
28 × 28 × 16	711	406.4	521	457
28 × 28 × 14	711	355.6	521	457
28 × 28 × 12	711	323.8	521	448
30 × 30 × 28	762	711	559	546
30 × 30 × 26	762	660	559	546
30 × 30 × 24	762	610	559	533
30 × 30 × 22	762	559	559	521
30 × 30 × 20	762	508	559	508
30 × 30 × 18	762	457	559	495
30 × 30 × 16	762	406.4	559	483
30 × 30 × 14	762	355.6	559	483
30 × 30 × 12	762	323.8	559	473
30 × 30 × 10	762	273.0	559	460
32 × 32 × 30	813	762	597	584
32 × 32 × 28	813	711	597	572
32 × 32 × 26	813	660	597	572
32 × 32 × 24	813	610	597	559
32 × 32 × 22	813	559	597	546
32 × 32 × 20	813	508	597	533
32 × 32 × 18	813	457	597	521
32 × 32 × 16	813	406.4	597	508
32 × 32 × 14	813	355.6	597	508
34 × 34 × 32	864	813	635	622
34 × 34 × 30	864	762	635	610
34 × 34 × 28	864	711	635	597
34 × 34 × 26	864	660	635	597
34 × 34 × 24	864	610	635	584
34 × 34 × 22	864	559	635	572
34 × 34 × 20	864	508	635	559
34 × 34 × 18	864	457	635	546
34 × 34 × 16	864	406.4	635	533

Copyright © 2004 by the American Society of Mechanical Engineers.
No reproduction may be made of this material without written consent of ASME.

Table 9 Dimensions of Reducing Outlet Tees and Reducing Outlet Crosses (Cont'd)

Nominal Pipe Size (NPS)	Outside Diameter at Bevel		Center-to-End	
	Run	Outlet	Run, *C*	Outlet, *M* [Note (1)]
36 × 36 × 34	914	864	673	660
36 × 36 × 32	914	813	673	648
36 × 36 × 30	914	762	673	635
36 × 36 × 28	914	711	673	622
36 × 36 × 26	914	660	673	622
36 × 36 × 24	914	610	673	610
36 × 36 × 22	914	559	673	597
36 × 36 × 20	914	508	673	584
36 × 36 × 18	914	457	673	572
36 × 36 × 16	914	406.4	673	559
38 × 38 × 36	965	914	711	711
38 × 38 × 34	965	864	711	698
38 × 38 × 32	965	813	711	686
38 × 38 × 30	965	762	711	673
38 × 38 × 28	965	711	711	648
38 × 38 × 26	965	660	711	648
38 × 38 × 24	965	610	711	635
38 × 38 × 22	965	559	711	622
38 × 38 × 20	965	508	711	610
38 × 38 × 18	965	457	711	597
40 × 40 × 38	1 016	965	749	749
40 × 40 × 36	1 016	914	749	737
40 × 40 × 34	1 016	864	749	724
40 × 40 × 32	1 016	813	749	711
40 × 40 × 30	1 016	762	749	698
40 × 40 × 28	1 016	711	749	673
40 × 40 × 26	1 016	660	749	673
40 × 40 × 24	1 016	610	749	660
40 × 40 × 22	1 016	559	749	648
40 × 40 × 20	1 016	508	749	635
40 × 40 × 18	1 016	457	749	622
42 × 42 × 40	1 067	1 016	762	711
42 × 42 × 38	1 067	968	762	711
42 × 42 × 36	1 067	914	762	711
42 × 42 × 34	1 067	864	762	711
42 × 42 × 32	1 067	813	762	711
42 × 42 × 30	1 067	762	762	711
42 × 42 × 28	1 067	711	762	698
42 × 42 × 26	1 067	660	762	698
42 × 42 × 24	1 067	610	762	660
42 × 42 × 22	1 067	559	762	660
42 × 42 × 20	1 067	508	762	660
42 × 42 × 18	1 067	457	762	648
42 × 42 × 16	1 067	406.4	762	635
44 × 44 × 42	1 118	1 067	813	762
44 × 44 × 40	1 118	1 016	813	749
44 × 44 × 38	1 118	965	813	737
44 × 44 × 36	1 118	914	813	724
44 × 44 × 34	1 118	864	813	724
44 × 44 × 32	1 118	813	813	711
44 × 44 × 30	1 118	762	813	711
44 × 44 × 28	1 118	711	813	698
44 × 44 × 26	1 118	660	813	698
44 × 44 × 24	1 118	610	813	698
44 × 44 × 22	1 118	559	813	686
44 × 44 × 20	1 118	508	813	686
46 × 46 × 44	1 168	1 118	851	800
46 × 46 × 42	1 168	1 067	851	787
46 × 46 × 40	1 168	1 016	851	775
46 × 46 × 38	1 168	965	851	762
46 × 46 × 36	1 168	914	851	762
46 × 46 × 34	1 168	864	851	749
46 × 46 × 32	1 168	813	851	749
46 × 46 × 30	1 168	762	851	737
46 × 46 × 28	1 168	711	851	737
46 × 46 × 26	1 168	660	851	737
46 × 46 × 24	1 168	610	851	724
46 × 46 × 22	1 168	559	851	724
48 × 48 × 46	1 219	1 168	889	838
48 × 48 × 44	1 219	1 118	889	838
48 × 48 × 42	1 219	1 067	889	813
48 × 48 × 40	1 219	1 016	889	813
48 × 48 × 38	1 219	965	889	813
48 × 48 × 36	1 219	914	889	787
48 × 48 × 34	1 219	864	889	787
48 × 48 × 32	1 219	813	889	787
48 × 48 × 30	1 219	762	889	762
48 × 48 × 28	1 219	711	889	762
48 × 48 × 26	1 219	660	889	762
48 × 48 × 24	1 219	610	889	737
48 × 48 × 22	1 219	559	889	737

GENERAL NOTE: All dimensions are in millimeters.

NOTE:

(1) Outlet dimension *M* for run sizes NPS 14 and larger is recommended but not required.

Copyright © 2004 by the American Society of Mechanical Engineers.
No reproduction may be made of this material without written consent of ASME.

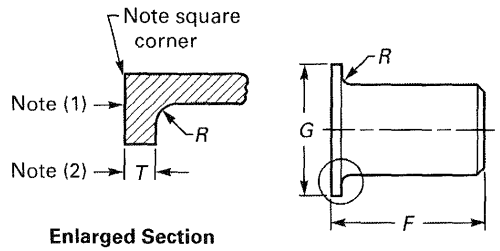

Enlarged Section of Lap

Table 10 Dimensions of Lap Joint Stub Ends

Nominal Pipe Size (NPS)	Outside Diameter of Barrel		Long Pattern Length, *F* [Notes (3), (4)]	Short Pattern Length, *F* [Notes (3), (4)]	Radius of Fillet, *R* [Note (5)]	Diameter of Lap, *G* [Note (6)]
	Max.	Min.				
½	22.8	20.5	76	51	3	35
¾	28.1	25.9	76	51	3	43
1	35.0	32.6	102	51	3	51
1¼	43.6	41.4	102	51	5	64
1½	49.9	47.5	102	51	6	73
2	62.4	59.5	152	64	8	92
2½	75.3	72.2	152	64	8	105
3	91.3	88.1	152	64	10	127
3½	104.0	100.8	152	76	10	140
4	116.7	113.5	152	76	11	157
5	144.3	140.5	203	76	11	186
6	171.3	167.5	203	89	13	216
8	222.1	218.3	203	102	13	270
10	277.2	272.3	254	127	13	324
12	328.0	323.1	254	152	13	381
14	359.9	354.8	305	152	13	413
16	411.0	405.6	305	152	13	470
18	462	456	305	152	13	533
20	514	507	305	152	13	584
22	565	558	305	152	13	641
24	616	609	305	152	13	692

GENERAL NOTES:

(a) All dimensions are in millimeters.

(b) See Table 2 for tolerances.

(c) Service conditions and joint construction often dictate stub end length requirements. Therefore, the purchaser must specify long or short pattern fitting when ordering.

NOTES:

(1) Gasket face finish shall be in accordance with ASME B16.5 for raised face flanges.

(2) The lap thickness *T* shall not be less than nominal pipe wall thickness. See Table 2 for maximum tolerance.

(3) When short pattern stub ends are used with larger flanges in Classes 300 and 600, and with most sizes in Classes 900 and higher, and when long pattern stub ends are used with larger flanges in Classes 1500 and 2500, it may be necessary to increase the length of the stub ends in order to avoid covering the weld with the flange. Such increases in length shall be a matter of agreement between the manufacturer and purchaser.

(4) When special facings such as tongue and groove, male and female, etc., are employed, additional lap thickness must be provided and such additional thickness shall be in addition to (not included in) the basic length *F*.

(5) These dimensions conform to the radius established for lap joint flanges in ASME B16.5.

(6) This dimension conforms to standard machined facings shown in ASME B16.5. The back face of the lap shall be machined to conform to the surface on which it seats. Where ring joint facings are to be applied, use dimension *K* as given in ASME B16.5.

Copyright © 2004 by the American Society of Mechanical Engineers.
No reproduction may be made of this material without written consent of ASME.

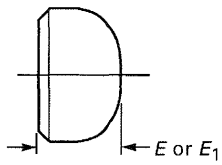

Table 11 Dimensions of Caps

Nominal Pipe Size (NPS)	Outside Diameter at Bevel	Length, E [Note (1)]	Limiting Wall Thickness for Length, E	Length, E_1 [Note (2)]
1/2	21.3	25	4.57	25
3/4	26.7	25	3.81	25
1	33.4	38	4.57	38
1 1/4	42.2	38	4.83	38
1 1/2	48.3	38	5.08	38
2	60.3	38	5.59	44
2 1/2	73.0	38	7.11	51
3	88.9	51	7.62	64
3 1/2	101.6	64	8.13	76
4	114.3	64	8.64	76
5	141.3	76	9.65	89
6	168.3	89	10.92	102
8	219.1	102	12.70	127
10	273.0	127	12.70	152
12	323.8	152	12.70	178
14	355.6	165	12.70	191
16	406.4	178	12.70	203
18	457	203	12.70	229
20	508	229	12.70	254
22	559	254	12.70	254
24	610	267	12.70	305
26	660	267	...	...
28	711	267	...	...
30	762	267	...	...
32	813	267	...	...
34	864	267	...	...
36	914	267	...	...
38	965	305	...	...
40	1 016	305	...	...
42	1 067	305	...	...
44	1 118	343	...	...
46	1 168	343	...	...
48	1 219	343	...	...

GENERAL NOTES:

(a) All dimensions are in millimeters.

(b) The shape of these caps shall be ellipsoidal and shall conform to the requirements given in the ASME Boiler and Pressure Vessel Code.

NOTES:

(1) Length E applies for thickness not exceeding that given in column "Limiting Wall Thickness for Length, E."

(2) Length E_1 applies for thickness greater than that given in column "Limiting Wall Thickness" for NPS 24 and smaller. For NPS 26 and larger, length E_1 shall be by agreement between the manufacturer and purchaser.

Copyright © 2004 by the American Society of Mechanical Engineers.
No reproduction may be made of this material without written consent of ASME.

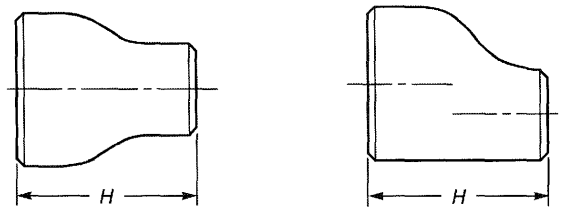

Table 12 Dimensions of Reducers

Nominal Pipe Size (NPS)	Outside Diameter at Bevel		End-to-End, *H*
	Large End	Small End	
3/4 × 1/2	26.7	21.3	38
3/4 × 3/8	26.7	17.3	38
1 × 3/4	33.4	26.7	51
1 × 1/2	33.4	21.3	51
1 1/4 × 1	42.2	33.4	51
1 1/4 × 3/4	42.2	26.7	51
1 1/4 × 1/2	42.2	21.3	51
1 1/2 × 1 1/4	48.3	42.2	64
1 1/2 × 1	48.3	33.4	64
1 1/2 × 3/4	48.3	26.7	64
1 1/2 × 1/2	48.3	21.3	64
2 × 1 1/2	60.3	48.3	76
2 × 1 1/4	60.3	42.2	76
2 × 1	60.3	33.4	76
2 × 3/4	60.3	26.7	76
2 1/2 × 2	73.0	60.3	89
2 1/2 × 1 1/2	73.0	48.3	89
2 1/2 × 1 1/4	73.0	42.2	89
2 1/2 × 1	73.0	33.4	89
3 × 2 1/2	88.9	73.0	89
3 × 2	88.9	60.3	89
3 × 1 1/2	88.9	48.3	89
3 × 1 1/4	88.9	42.2	89
3 1/2 × 3	101.6	88.9	102
3 1/2 × 2 1/2	101.6	73.0	102
3 1/2 × 2	101.6	60.3	102
3 1/2 × 1 1/2	101.6	48.3	102
3 1/2 × 1 1/4	101.6	42.2	102
4 × 3 1/2	114.3	101.6	102
4 × 3	114.3	88.9	102
4 × 2 1/2	114.3	73.0	102
4 × 2	114.3	60.3	102
4 × 1 1/2	114.3	48.3	102
5 × 4	141.3	114.3	127
5 × 3 1/2	141.3	101.6	127
5 × 3	141.3	88.9	127
5 × 2 1/2	141.3	73.0	127
5 × 2	141.3	60.3	127
6 × 5	168.3	141.3	140
6 × 4	168.3	114.3	140
6 × 3 1/2	168.3	101.6	140
6 × 3	168.3	88.9	140
6 × 2 1/2	168.3	73.0	140
8 × 6	219.1	168.3	152
8 × 5	219.1	141.3	152
8 × 4	219.1	114.3	152
8 × 3 1/2	219.1	101.6	152
10 × 8	273.0	219.1	178
10 × 6	273.0	168.3	178
10 × 5	273.0	141.3	178
10 × 4	273.0	114.3	178
12 × 10	323.8	273.0	203
12 × 8	323.8	219.1	203
12 × 6	323.8	168.3	203
12 × 5	323.8	141.3	203
14 × 12	355.6	323.8	330
14 × 10	355.6	273.0	330
14 × 8	355.6	219.1	330
14 × 6	355.6	168.3	330
16 × 14	406.4	355.6	356
16 × 12	406.4	323.8	356
16 × 10	406.4	273.0	356
16 × 8	406.4	219.1	356
18 × 16	457	406.4	381
18 × 14	457	355.6	381
18 × 12	457	323.8	381
18 × 10	457	273.0	381

Copyright © 2004 by the American Society of Mechanical Engineers.
No reproduction may be made of this material without written consent of ASME.

Table 12 Dimensions of Reducers (Cont'd)

Nominal Pipe Size (NPS)	Outside Diameter at Bevel		End-to-End, *H*	Nominal Pipe Size (NPS)	Outside Diameter at Bevel		End-to-End, *H*
	Large End	Small End			Large End	Small End	
20 × 18	508	457	508	36 × 34	914	864	610
20 × 16	508	406.4	508	36 × 32	914	813	610
20 × 14	508	355.6	508	36 × 30	914	762	610
20 × 12	508	323.8	508	36 × 26	914	660	610
				36 × 24	914	610	610
22 × 20	559	508	508				
22 × 18	559	457	508	38 × 36	965	914	610
22 × 16	559	406.4	508	38 × 34	965	864	610
22 × 14	559	355.4	508	38 × 32	965	813	610
				38 × 30	965	762	610
				38 × 28	965	711	610
24 × 22	610	559	508	38 × 26	965	660	610
24 × 20	610	508	508				
24 × 18	610	457	508	40 × 38	1 016	965	610
24 × 16	610	406.4	508	40 × 36	1 016	914	610
				40 × 34	1 016	864	610
26 × 24	660	610	610	40 × 32	1 016	813	610
26 × 22	660	559	610	40 × 30	1 016	762	610
26 × 20	660	508	610				
26 × 18	660	457	610	42 × 40	1 067	1 016	610
				42 × 38	1 067	965	610
28 × 26	711	660	610	42 × 36	1 067	914	610
28 × 24	711	610	610	42 × 34	1 067	864	610
28 × 20	711	508	610	42 × 32	1 067	813	610
28 × 18	711	457	610	42 × 30	1 067	762	610
30 × 28	762	711	610	44 × 42	1 118	1 067	610
30 × 26	762	660	610	44 × 40	1 118	1 016	610
30 × 24	762	610	610	44 × 38	1 118	965	610
30 × 20	762	508	610	44 × 36	1 118	914	610
32 × 30	813	762	610	46 × 44	1 168	1 118	711
32 × 28	813	711	610	46 × 42	1 168	1 067	711
32 × 26	813	660	610	46 × 40	1 168	1 016	711
32 × 24	813	610	610	46 × 38	1 168	965	711
34 × 32	864	813	610	48 × 46	1 219	1 168	711
34 × 30	864	762	610	48 × 44	1 219	1 118	711
34 × 26	864	660	610	48 × 42	1 219	1 067	711
34 × 24	864	610	610	48 × 40	1 219	1 016	711

GENERAL NOTES:
(a) All dimensions are in millimeters.
(b) While the figure illustrates a bell-shaped reducer, the use of conical reducer is not prohibited.

Copyright © 2004 by the American Society of Mechanical Engineers.
No reproduction may be made of this material without written consent of ASME.

MANDATORY APPENDIX I
INCH TABLES

This Appendix provides tables of the standard inch dimensions for fittings.

Copyright © 2004 by the American Society of Mechanical Engineers.
No reproduction may be made of this material without written consent of ASME.

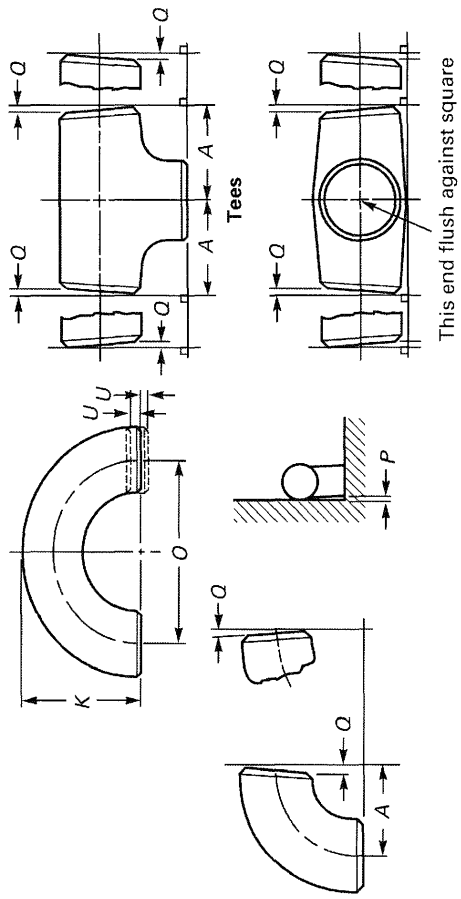

Table I1 Illustration

Copyright © 2004 by the American Society of Mechanical Engineers.
No reproduction may be made of this material without written consent of ASME.

Table I1 Tolerances

All Fittings [Notes (1) and (2)]			Center-to-End Dimensions of 90 deg and 45 deg Elbows and Tees, *A, B, C, M*	Overall Length of Reducers and Lap Joint Stub Ends, *F, H*	Overall Length of Caps, *E*	180 deg Returns			Lap Joint Stub Ends [Note (6)]				Angularity Tolerances	
Nominal Pipe Size (NPS)	Outside Diameter at Bevel, *D* [Notes (3) and (4)]	Inside Diameter at End [Notes (3) and (5)]				Center-to-Center Dimension, *O*	Back-to-Face Dimension, *K*	Alignment of Ends, *U*	Outside Diameter of Lap, *G*	Fillet Radius of Lap, *R*	Lap Thickness, *T*	Nominal Pipe Size (NPS)	Off Angle, *Q*	Off Plane, *P*
½ to 2½	+0.06, −0.03	0.03	0.06	0.06	0.12	0.25	0.25	0.03	+0, −0.03	+0, −0.03	+0.06, −0	½ to 4	0.03	0.06
3 to 3½	0.06	0.06	0.06	0.06	0.12	0.25	0.25	0.03	+0, −0.03	+0, −0.03	+0.06, −0	5 to 8	0.06	0.12
4	0.06	0.06	0.06	0.06	0.12	0.25	0.25	0.03	+0, −0.03	+0, −0.06	+0.06, −0	10 to 12	0.09	0.19
5 to 8	+0.09, −0.06	0.06	0.06	0.06	0.25	0.25	0.25	0.03	+0, −0.03	+0, −0.06	+0.06, −0	14 to 16	0.09	0.25
10 to 18	+0.16, −0.12	0.12	0.09	0.09	0.25	0.38	0.25	0.06	+0, −0.06	+0, −0.06	+0.12, −0	18 to 24	0.12	0.38
20 to 24	+0.25, −0.19	0.19	0.09	0.09	0.25	0.38	0.25	0.06	+0, −0.06	+0, −0.06	+0.12, −0	26 to 30	0.19	0.38
26 to 30	+0.25, −0.19	0.19	0.12	0.19	0.38	. . .	. . .	. . .	. . .	. . .	. . .	32 to 42	0.19	0.50
32 to 48	+0.25, −0.19	0.19	0.19	0.19	0.38	. . .	. . .	. . .	. . .	. . .	. . .	44 to 48	0.19	0.75

GENERAL NOTES:

(a) For reference, see Table I1 Illustration on page 20.

(b) All dimensions are in inches.

(c) Tolerances are equal plus and minus except as noted.

NOTES:

(1) The inside diameter and the nominal wall thicknesses at ends are to be specified by the purchaser.

(2) A minimum wall thickness of 87.5% applies unless the purchaser specifies a different wall thickness tolerance. See Fig. 1, Note (1)(a).

(3) Out-of-round is the sum of absolute values of plus and minus tolerances.

(4) This tolerance may not apply in localized areas of formed fittings where increased wall thickness is required to meet design requirements of para. 2.2.

(5) Unless otherwise specified by the purchaser, these tolerances apply to the nominal inside diameter, which equals the difference between the nominal outside diameter and twice the nominal wall thickness.

(6) See Table I9 for limiting dimensions of outside diameter of barrel.

Copyright © 2004 by the American Society of Mechanical Engineers.
No reproduction may be made of this material without written consent of ASME.

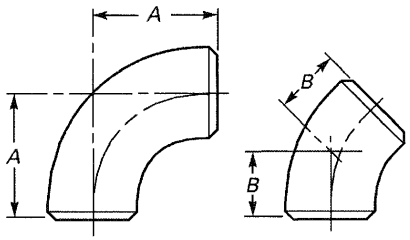

Table I2 Dimensions of Long Radius Elbows

Nominal Pipe Size (NPS)	Outside Diameter at Bevel	Center-to-End	
		90 deg Elbows, *A*	45 deg Elbows, *B*
½	0.84	1.50	0.62
¾	1.05	1.50	0.75
1	1.32	1.50	0.88
1¼	1.66	1.88	1.00
1½	1.90	2.25	1.12
2	2.38	3.00	1.38
2½	2.88	3.75	1.75
3	3.50	4.50	2.00
3½	4.00	5.25	2.25
4	4.50	6.00	2.50
5	5.56	7.50	3.12
6	6.62	9.00	3.75
8	8.62	12.00	5.00
10	10.75	15.00	6.25
12	12.75	18.00	7.50
14	14.00	21.00	8.75
16	16.00	24.00	10.00
18	18.00	27.00	11.25
20	20.00	30.00	12.50
22	22.00	33.00	13.50
24	24.00	36.00	15.00
26	26.00	39.00	16.00
28	28.00	42.00	17.25
30	30.00	45.00	18.50
32	32.00	48.00	19.75
34	34.00	51.00	21.00
36	36.00	54.00	22.25
38	38.00	57.00	23.62
40	40.00	60.00	24.88
42	42.00	63.00	26.00
44	44.00	66.00	27.38
46	46.00	69.00	28.62
48	48.00	72.00	29.88

GENERAL NOTE: All dimensions are in inches.

Copyright © 2004 by the American Society of Mechanical Engineers.
No reproduction may be made of this material without written consent of ASME.

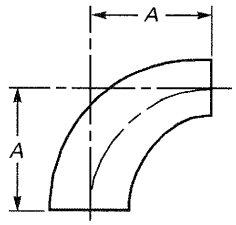

Table I3 Dimensions of Long Radius Reducing Elbows

Nominal Pipe Size (NPS)	Outside Diameter at Bevel		Center-to-End, *A*	Nominal Pipe Size (NPS)	Outside Diameter at Bevel		Center-to-End, *A*
	Large End	Small End			Large End	Small End	
2 × 1½	2.38	1.90	3.00	10 × 8	10.75	8.62	15.00
2 × 1¼	2.38	1.66	3.00	10 × 6	10.75	6.62	15.00
2 × 1	2.38	1.32	3.00	10 × 5	10.75	5.56	15.00
2½ × 2	2.88	2.38	3.75	12 × 10	12.75	10.75	18.00
2½ × 1½	2.88	1.90	3.75	12 × 8	12.75	8.62	18.00
2½ × 1¼	2.88	1.66	3.75	12 × 6	12.75	6.62	18.00
3 × 2½	3.50	2.88	4.50	14 × 12	14.00	12.75	21.00
3 × 2	3.50	2.38	4.50	14 × 10	14.00	10.75	21.00
3 × 1½	3.50	1.90	4.50	14 × 8	14.00	8.62	21.00
3½ × 3	4.00	3.50	5.25	16 × 14	16.00	14.00	24.00
3½ × 2½	4.00	2.88	5.25	16 × 12	16.00	12.75	24.00
3½ × 2	4.00	2.38	5.25	16 × 10	16.00	10.75	24.00
4 × 3½	4.50	4.00	6.00	18 × 16	18.00	16.00	27.00
4 × 3	4.50	3.50	6.00	18 × 14	18.00	14.00	27.00
4 × 2½	4.50	2.88	6.00	18 × 12	18.00	12.75	27.00
4 × 2	4.50	2.38	6.00	18 × 10	18.00	10.75	27.00
5 × 4	5.56	4.50	7.50	20 × 18	20.00	18.00	30.00
5 × 3½	5.56	4.00	7.50	20 × 16	20.00	16.00	30.00
5 × 3	5.56	3.50	7.50	20 × 14	20.00	14.00	30.00
5 × 2½	5.56	2.88	7.50	20 × 12	20.00	12.75	30.00
				20 × 10	20.00	10.75	30.00
6 × 5	6.62	5.56	9.00				
6 × 4	6.62	4.50	9.00	24 × 22	24.00	22.00	36.00
6 × 3½	6.62	4.00	9.00	24 × 20	24.00	20.00	36.00
6 × 3	6.62	3.50	9.00	24 × 18	24.00	18.00	36.00
				24 × 16	24.00	16.00	36.00
8 × 6	8.62	6.62	12.00	24 × 14	24.00	14.00	36.00
8 × 5	8.62	5.56	12.00	24 × 12	24.00	12.75	36.00
8 × 4	8.62	4.50	12.00	...	...	...	...

GENERAL NOTE: All dimensions are in inches.

Copyright © 2004 by the American Society of Mechanical Engineers.
No reproduction may be made of this material without written consent of ASME.

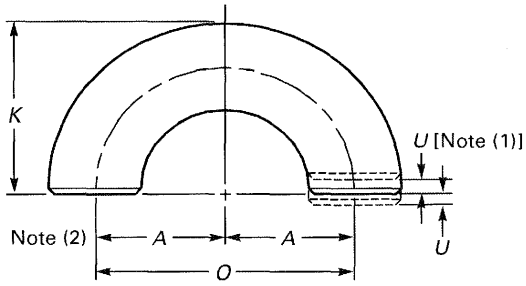

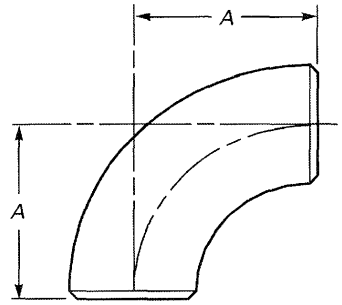

Table I4 Dimensions of Long Radius Returns

Nominal Pipe Size (NPS)	Outside Diameter at Bevel	Center-to-Center, *O*	Back-to-Face, *K*
½	0.84	3.00	1.88
¾ [Note (3)]	1.05	3.00	2.00
1	1.32	3.00	2.19
1¼	1.66	3.75	2.75
1½	1.90	4.50	3.25
2	2.38	6.00	4.19
2½	2.88	7.50	5.19
3	3.50	9.00	6.25
3½	4.00	10.50	7.25
4	4.50	12.00	8.25
5	5.56	15.00	10.31
6	6.62	18.00	12.31
8	8.62	24.00	16.31
10	10.75	30.00	20.38
12	12.75	36.00	24.38
14	14.00	42.00	28.00
16	16.00	48.00	32.00
18	18.00	54.00	36.00
20	20.00	60.00	40.00
22	22.00	66.00	44.00
24	24.00	72.00	48.00

GENERAL NOTE: All dimensions are in inches.

NOTES:

(1) See Table I1 for tolerance for alignment of ends *U*.

(2) Dimension *A* is equal to one-half of dimension *O*.

(3) *O* and *K* dimensions of 2.25 in. and 1.69 in., respectively, may be furnished for NPS ¾ at the manufacturer's option.

Table I5 Dimensions of Short Radius Elbows

Nominal Pipe Size (NPS)	Outside Diameter at Bevel	Center-to-End, *A*
1	1.32	1.00
1¼	1.66	1.25
1½	1.90	1.50
2	2.38	2.00
2½	2.88	2.50
3	3.50	3.00
3½	4.00	3.50
4	4.50	4.00
5	5.56	5.00
6	6.62	6.00
8	8.62	8.00
10	10.75	10.00
12	12.75	12.00
14	14.00	14.00
16	16.00	16.00
18	18.00	18.00
20	20.00	20.00
22	22.00	22.00
24	24.00	24.00

GENERAL NOTE: All dimensions are in inches.

Copyright © 2004 by the American Society of Mechanical Engineers.
No reproduction may be made of this material without written consent of ASME.

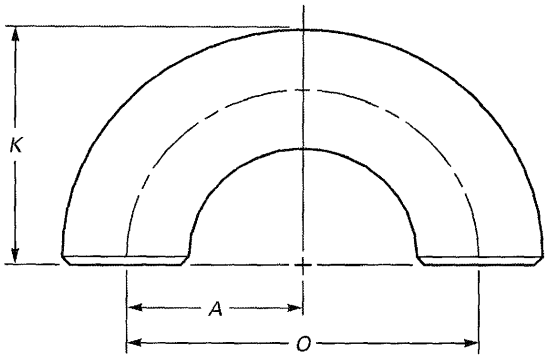

Table 16 Dimensions of Short Radius 180 deg Returns

Nominal Pipe Size (NPS)	Outside Diameter at Bevel	Center-to-Center, *O*	Back-to-Face, *K*
1	1.32	2.00	1.62
1¼	1.66	2.50	2.06
1½	1.90	3.00	2.44
2	2.38	4.00	3.19
2½	2.88	5.00	3.94
3	3.50	6.00	4.75
3½	4.00	7.00	5.50
4	4.50	8.00	6.25
5	5.56	10.00	7.75
6	6.62	12.00	9.31
8	8.62	16.00	12.31
10	10.75	20.00	15.38
12	12.75	24.00	18.38
14	14.00	28.00	21.00
16	16.00	32.00	24.00
18	18.00	36.00	27.00
20	20.00	40.00	30.00
22	22.00	44.00	33.00
24	24.00	48.00	36.00

GENERAL NOTES:
(a) All dimensions are in inches.
(b) Dimension *A* is equal to one-half of dimension *O*.

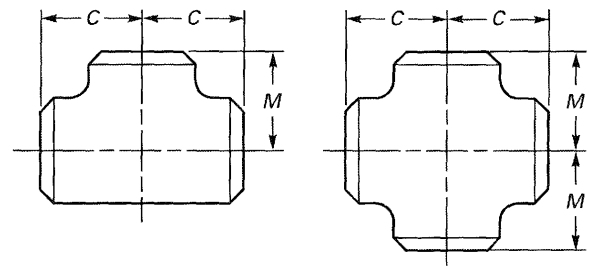

Table 17 Dimensions of Straight Tees and Crosses

Nominal Pipe Size (NPS)	Outside Diameter at Bevel	Center-to-End: Run, *C*	Center-to-End: Outlet, *M* [Notes (1) and (2)]
½	0.84	1.00	1.00
¾	1.05	1.12	1.12
1	1.32	1.50	1.50
1¼	1.66	1.88	1.88
1½	1.90	2.25	2.25
2	2.38	2.50	2.50
2½	2.88	3.00	3.00
3	3.50	3.38	3.38
3½	4.00	3.75	3.75
4	4.50	4.12	4.12
5	5.56	4.88	4.88
6	6.62	5.62	5.62
8	8.62	7.00	7.00
10	10.75	8.50	8.50
12	12.75	10.00	10.00
14	14.00	11.00	11.00
16	16.00	12.00	12.00
18	18.00	13.50	13.50
20	20.00	15.00	15.00
22	22.00	16.50	16.50
24	24.00	17.00	17.00
26	26.00	19.50	19.50
28	28.00	20.50	20.50
30	30.00	22.00	22.00
32	32.00	23.50	23.50
34	34.00	25.00	25.00
36	36.00	26.50	26.50
38	38.00	28.00	28.00
40	40.00	29.50	29.50
42	42.00	30.00	28.00
44	44.00	32.00	30.00
46	46.00	33.50	31.50
48	48.00	35.00	33.00

GENERAL NOTE: All dimensions are in inches.

NOTES:
(1) Outlet dimension *M* for NPS 26 and larger is recommended but not required.
(2) Dimensions applicable to crosses NPS 24 and smaller.

Copyright © 2004 by the American Society of Mechanical Engineers.
No reproduction may be made of this material without written consent of ASME.

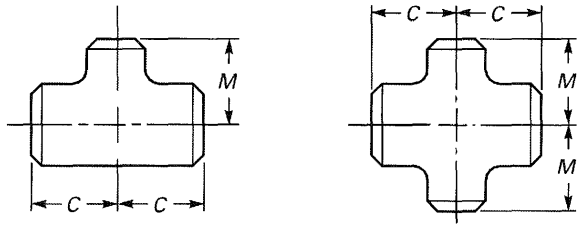

Table I8 Dimensions of Reducing Outlet Tees and Reducing Outlet Crosses

Nominal Pipe Size (NPS)	Outside Diameter at Bevel		Center-to-End		Nominal Pipe Size (NPS)	Outside Diameter at Bevel		Center-to-End	
	Run	Outlet	Run, *C*	Outlet, *M* [Note (1)]		Run	Outlet	Run, *C*	Outlet, *M* [Note (1)]
1/2 × 1/2 × 3/8	0.84	0.68	1.00	1.00	5 × 5 × 4	5.56	4.50	4.88	4.62
1/2 × 1/2 × 1/4	0.84	0.54	1.00	1.00	5 × 5 × 3 1/2	5.56	4.00	4.88	4.50
3/4 × 3/4 × 1/2	1.05	0.84	1.12	1.12	5 × 5 × 3	5.56	3.50	4.88	4.38
3/4 × 3/4 × 3/8	1.05	0.68	1.12	1.12	5 × 5 × 2 1/2	5.56	2.88	4.88	4.25
1 × 1 × 3/4	1.32	1.05	1.50	1.50	5 × 5 × 2	5.56	2.38	4.88	4.12
1 × 1 × 1/2	1.32	0.84	1.50	1.50					
					6 × 6 × 5	6.62	5.56	5.62	5.38
1 1/4 × 1 1/4 × 1	1.66	1.32	1.88	1.88	6 × 6 × 4	6.62	4.50	5.62	5.12
1 1/4 × 1 1/4 × 3/4	1.66	1.05	1.88	1.88	6 × 6 × 3 1/2	6.62	4.00	5.62	5.00
1 1/4 × 1 1/4 × 1/2	1.66	0.84	1.88	1.88	6 × 6 × 3	6.62	3.50	5.62	4.88
					6 × 6 × 2 1/2	6.62	2.88	5.62	4.75
1 1/2 × 1 1/2 × 1 1/4	1.90	1.66	2.25	2.25	8 × 8 × 6	8.62	6.62	7.00	6.62
1 1/2 × 1 1/2 × 1	1.90	1.32	2.25	2.25	8 × 8 × 5	8.62	5.56	7.00	6.38
1 1/2 × 1 1/2 × 3/4	1.90	1.05	2.25	2.25	8 × 8 × 4	8.62	4.50	7.00	6.12
1 1/2 × 1 1/2 × 1/2	1.90	0.84	2.25	2.25	8 × 8 × 3 1/2	8.62	4.00	7.00	6.00
2 × 2 × 1 1/2	2.38	1.90	2.50	2.38	10 × 10 × 8	10.75	8.62	8.50	8.00
2 × 2 × 1 1/4	2.38	1.66	2.50	2.25	10 × 10 × 6	10.75	6.62	8.50	7.62
2 × 2 × 1	2.38	1.32	2.50	2.00	10 × 10 × 5	10.75	5.56	8.50	7.50
2 × 2 × 3/4	2.38	1.05	2.50	1.75	10 × 10 × 4	10.75	4.50	8.50	7.25
2 1/2 × 2 1/2 × 2	2.88	2.38	3.00	2.75	12 × 12 × 10	12.75	10.75	10.00	9.50
2 1/2 × 2 1/2 × 1 1/2	2.88	1.90	3.00	2.62	12 × 12 × 8	12.75	8.62	10.00	9.00
2 1/2 × 2 1/2 × 1 1/4	2.88	1.66	3.00	2.50	12 × 12 × 6	12.75	6.62	10.00	8.62
2 1/2 × 2 1/2 × 1	2.88	1.32	3.00	2.25	12 × 12 × 5	12.75	5.56	10.00	8.50
3 × 3 × 2 1/2	3.50	2.88	3.38	3.25	14 × 14 × 12	14.00	12.75	11.00	10.62
3 × 3 × 2	3.50	2.38	3.38	3.00	14 × 14 × 10	14.00	10.75	11.00	10.12
3 × 3 × 1 1/2	3.50	1.90	3.38	2.88	14 × 14 × 8	14.00	8.62	11.00	9.75
3 × 3 × 1 1/4	3.50	1.66	3.38	2.75	14 × 14 × 6	14.00	6.62	11.00	9.38
					16 × 16 × 14	16.00	14.00	12.00	12.00
3 1/2 × 3 1/2 × 3	4.00	3.50	3.75	3.62	16 × 16 × 12	16.00	12.75	12.00	11.62
3 1/2 × 3 1/2 × 2 1/2	4.00	2.88	3.75	3.50	16 × 16 × 10	16.00	10.75	12.00	11.12
3 1/2 × 3 1/2 × 2	4.00	2.38	3.75	3.25	16 × 16 × 8	16.00	8.62	12.00	10.75
3 1/2 × 3 1/2 × 1 1/2	4.00	1.90	3.75	3.12	16 × 16 × 6	16.00	6.62	12.00	10.38
4 × 4 × 3 1/2	4.50	4.00	4.12	4.00	18 × 18 × 16	18.00	16.00	13.50	13.00
4 × 4 × 3	4.50	3.50	4.12	3.88	18 × 18 × 14	18.00	14.00	13.50	13.00
4 × 4 × 2 1/2	4.50	2.88	4.12	3.75	18 × 18 × 12	18.00	12.75	13.50	12.62
4 × 4 × 2	4.50	2.38	4.12	3.50	18 × 18 × 10	18.00	10.75	13.50	12.12
4 × 4 × 1 1/2	4.50	1.90	4.12	3.38	18 × 18 × 8	18.00	8.62	13.50	11.75

Copyright © 2004 by the American Society of Mechanical Engineers.
No reproduction may be made of this material without written consent of ASME.

Table I8 Dimensions of Reducing Outlet Tees and Reducing Outlet Crosses (Cont'd)

Nominal Pipe Size (NPS)	Outside Diameter at Bevel		Center-to-End	
	Run	Outlet	Run, *C*	Outlet, *M* [Note (1)]
20 × 20 × 18	20.00	18.00	15.00	14.50
20 × 20 × 16	20.00	16.00	15.00	14.00
20 × 20 × 14	20.00	14.00	15.00	14.00
20 × 20 × 12	20.00	12.75	15.00	13.62
20 × 20 × 10	20.00	10.75	15.00	13.12
20 × 20 × 8	20.00	8.62	15.00	12.75
22 × 22 × 20	22.00	20.00	16.50	16.00
22 × 22 × 18	22.00	18.00	16.50	15.50
22 × 22 × 16	22.00	16.00	16.50	15.00
22 × 22 × 14	22.00	14.00	16.50	15.00
22 × 22 × 12	22.00	12.75	16.50	14.62
22 × 22 × 10	22.00	10.75	16.50	14.12
24 × 24 × 22	24.00	22.00	17.00	17.00
24 × 24 × 20	24.00	20.00	17.00	17.00
24 × 24 × 18	24.00	18.00	17.00	16.50
24 × 24 × 16	24.00	16.00	17.00	16.00
24 × 24 × 14	24.00	14.00	17.00	16.00
24 × 24 × 12	24.00	12.75	17.00	15.62
24 × 24 × 10	24.00	10.75	17.00	15.12
26 × 26 × 24	26.00	24.00	19.50	19.00
26 × 26 × 22	26.00	22.00	19.50	18.50
26 × 26 × 20	26.00	20.00	19.50	18.00
26 × 26 × 18	26.00	18.00	19.50	17.50
26 × 26 × 16	26.00	16.00	19.50	17.00
26 × 26 × 14	26.00	14.00	19.50	17.00
26 × 26 × 12	26.00	12.75	19.50	16.62
28 × 28 × 26	28.00	26.00	20.50	20.50
28 × 28 × 24	28.00	24.00	20.50	20.00
28 × 28 × 22	28.00	22.00	20.50	19.50
28 × 28 × 20	28.00	20.00	20.50	19.00
28 × 28 × 18	28.00	18.00	20.50	18.50
28 × 28 × 16	28.00	16.00	20.50	18.00
28 × 28 × 14	28.00	14.00	20.50	18.00
28 × 28 × 12	28.00	12.75	20.50	17.62
30 × 30 × 28	30.00	28.00	22.00	21.50
30 × 30 × 26	30.00	26.00	22.00	21.50
30 × 30 × 24	30.00	24.00	22.00	21.00
30 × 30 × 22	30.00	22.00	22.00	20.50
30 × 30 × 20	30.00	20.00	22.00	20.00
30 × 30 × 18	30.00	18.00	22.00	19.50
30 × 30 × 16	30.00	16.00	22.00	19.00
30 × 30 × 14	30.00	14.00	22.00	19.00
30 × 30 × 12	30.00	12.75	22.00	18.62
30 × 30 × 10	30.00	10.75	22.00	18.12
32 × 32 × 30	32.00	30.00	23.50	23.00
32 × 32 × 28	32.00	28.00	23.50	22.50
32 × 32 × 26	32.00	26.00	23.50	22.50
32 × 32 × 24	32.00	24.00	23.50	22.00
32 × 32 × 22	32.00	22.00	23.50	21.50
32 × 32 × 20	32.00	20.00	23.50	21.00
32 × 32 × 18	32.00	18.00	23.50	20.50
32 × 32 × 16	32.00	16.00	23.50	20.00
32 × 32 × 14	32.00	14.00	23.50	20.00
34 × 34 × 32	34.00	32.00	25.00	24.50
34 × 34 × 30	34.00	30.00	25.00	24.00
34 × 34 × 28	34.00	28.00	25.00	23.50
34 × 34 × 26	34.00	26.00	25.00	23.50
34 × 34 × 24	34.00	24.00	25.00	23.00
34 × 34 × 22	34.00	22.00	25.00	22.50
34 × 34 × 20	34.00	20.00	25.00	22.00
34 × 34 × 18	34.00	18.00	25.00	21.50
34 × 34 × 16	34.00	16.00	25.00	21.00
36 × 36 × 34	36.00	34.00	26.50	26.00
36 × 36 × 32	36.00	32.00	26.50	25.50
36 × 36 × 30	36.00	30.00	26.50	25.00
36 × 36 × 28	36.00	28.00	26.50	24.50
36 × 36 × 26	36.00	26.00	26.50	24.50
36 × 36 × 24	36.00	24.00	26.50	24.00
36 × 36 × 22	36.00	22.00	26.50	23.50
36 × 36 × 20	36.00	20.00	26.50	23.00
36 × 36 × 18	36.00	18.00	26.50	22.50
36 × 36 × 16	36.00	16.00	26.50	22.00
38 × 38 × 36	38.00	36.00	28.00	28.00
38 × 38 × 34	38.00	34.00	28.00	27.50
38 × 38 × 32	38.00	32.00	28.00	27.00
38 × 38 × 30	38.00	30.00	28.00	26.50
38 × 38 × 28	38.00	28.00	28.00	25.50

Copyright © 2004 by the American Society of Mechanical Engineers.
No reproduction may be made of this material without written consent of ASME.

Table I8 Dimensions of Reducing Outlet Tees and Reducing Outlet Crosses (Cont'd)

Nominal Pipe Size (NPS)	Outside Diameter at Bevel		Center-to-End	
	Run	Outlet	Run, *C*	Outlet, *M* [Note (1)]
38 × 38 × 26	38.00	26.00	28.00	25.50
38 × 38 × 24	38.00	24.00	28.00	25.00
38 × 38 × 22	38.00	22.00	28.00	24.50
38 × 38 × 20	38.00	20.00	28.00	24.00
38 × 38 × 18	38.00	18.00	28.00	23.50
40 × 40 × 38	40.00	38.00	29.50	29.50
40 × 40 × 36	40.00	36.00	29.50	29.00
40 × 40 × 34	40.00	34.00	29.50	28.50
40 × 40 × 32	40.00	32.00	29.50	28.00
40 × 40 × 30	40.00	30.00	29.50	27.50
40 × 40 × 28	40.00	28.00	29.50	26.50
40 × 40 × 26	40.00	26.00	29.50	26.50
40 × 40 × 24	40.00	24.00	29.50	26.00
40 × 40 × 22	40.00	22.00	29.50	25.50
40 × 40 × 20	40.00	20.00	29.50	25.00
40 × 40 × 18	40.00	18.00	29.50	24.50
42 × 42 × 40	42.00	40.00	30.00	28.00
42 × 42 × 38	42.00	38.00	30.00	28.00
42 × 42 × 36	42.00	36.00	30.00	28.00
42 × 42 × 34	42.00	34.00	30.00	28.00
42 × 42 × 32	42.00	32.00	30.00	28.00
42 × 42 × 30	42.00	30.00	30.00	28.00
42 × 42 × 28	42.00	28.00	30.00	27.50
42 × 42 × 26	42.00	26.00	30.00	27.50
42 × 42 × 24	42.00	24.00	30.00	26.00
42 × 42 × 22	42.00	22.00	30.00	26.00
42 × 42 × 20	42.00	20.00	30.00	26.00
42 × 42 × 18	42.00	18.00	30.00	25.50
42 × 42 × 16	42.00	16.00	30.00	25.00
44 × 44 × 42	44.00	42.00	32.00	30.00
44 × 44 × 40	44.00	40.00	32.00	29.50
44 × 44 × 38	44.00	38.00	32.00	29.00
44 × 44 × 36	44.00	36.00	32.00	28.50
44 × 44 × 34	44.00	34.00	32.00	28.50
44 × 44 × 32	44.00	32.00	32.00	28.00
44 × 44 × 30	44.00	30.00	32.00	28.00
44 × 44 × 28	44.00	28.00	32.00	27.50
44 × 44 × 26	44.00	26.00	32.00	27.50
44 × 44 × 24	44.00	24.00	32.00	27.50
44 × 44 × 22	44.00	22.00	32.00	27.00
44 × 44 × 20	44.00	20.00	32.00	27.00
46 × 46 × 44	46.00	44.00	33.50	31.50
46 × 46 × 42	46.00	42.00	33.50	31.00
46 × 46 × 40	46.00	40.00	33.50	30.50
46 × 46 × 38	46.00	38.00	33.50	30.00
46 × 46 × 36	46.00	36.00	33.50	30.00
46 × 46 × 34	46.00	34.00	33.50	29.50
46 × 46 × 32	46.00	32.00	33.50	29.50
46 × 46 × 30	46.00	30.00	33.50	29.00
46 × 46 × 28	46.00	28.00	33.50	29.00
46 × 46 × 26	46.00	26.00	33.50	29.00
46 × 46 × 24	46.00	24.00	33.50	28.50
46 × 46 × 22	46.00	22.00	33.50	28.50
48 × 48 × 46	48.00	46.00	35.00	33.00
48 × 48 × 44	48.00	44.00	35.00	33.00
48 × 48 × 42	48.00	42.00	35.00	32.00
48 × 48 × 40	48.00	40.00	35.00	32.00
48 × 48 × 38	48.00	38.00	35.00	32.00
48 × 48 × 36	48.00	36.00	35.00	31.00
48 × 48 × 34	48.00	34.00	35.00	31.00
48 × 48 × 32	48.00	32.00	35.00	31.00
48 × 48 × 30	48.00	30.00	35.00	30.00
48 × 48 × 28	48.00	28.00	35.00	30.00
48 × 48 × 26	48.00	26.00	35.00	30.00
48 × 48 × 24	48.00	24.00	35.00	29.00
48 × 48 × 22	48.00	22.00	35.00	29.00

GENERAL NOTE: All dimensions are in inches.

NOTE:

(1) Outlet dimension *M* for run sizes 14 and larger is recommended but not required.

Copyright © 2004 by the American Society of Mechanical Engineers.
No reproduction may be made of this material without written consent of ASME.

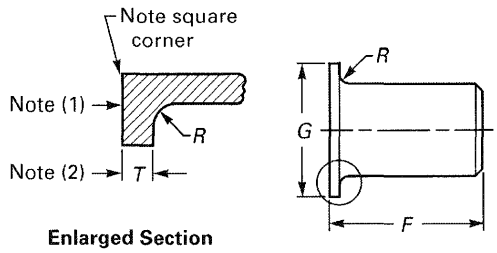

Enlarged Section of Lap

Table I9 Dimensions of Lap Joint Stub Ends

Nominal Pipe Size (NPS)	Outside Diameter of Barrel		Long Pattern Length, *F* [Notes (3), (4)]	Short Pattern Length, *F* [Notes (3), (4)]	Radius of Fillet, *R* [Note (5)]	Diameter of Lap, *G* [Note (6)]
	Max.	Min.				
1/2	0.896	0.809	3.00	2.00	0.12	1.38
3/4	1.106	1.019	3.00	2.00	0.12	1.69
1	1.376	1.284	4.00	2.00	0.12	2.00
1 1/4	1.716	1.629	4.00	2.00	0.19	2.50
1 1/2	1.965	1.869	4.00	2.00	0.25	2.88
2	2.456	2.344	6.00	2.50	0.31	3.62
2 1/2	2.966	2.844	6.00	2.50	0.31	4.12
3	3.596	3.469	6.00	2.50	0.38	5.00
3 1/2	4.096	3.969	6.00	3.00	0.38	5.50
4	4.593	4.469	6.00	3.00	0.44	6.19
5	5.683	5.532	8.00	3.00	0.44	7.31
6	6.743	6.594	8.00	3.50	0.50	8.50
8	8.743	8.594	8.00	4.00	0.50	10.62
10	10.913	10.719	10.00	5.00	0.50	12.75
12	12.913	12.719	10.00	6.00	0.50	15.00
14	14.170	13.969	12.00	6.00	0.50	16.25
16	16.180	15.969	12.00	6.00	0.50	18.50
18	18.190	17.969	12.00	6.00	0.50	21.00
20	20.240	19.969	12.00	6.00	0.50	23.00
22	22.240	21.969	12.00	6.00	0.50	25.25
24	24.240	23.969	12.00	6.00	0.50	27.25

GENERAL NOTES:

(a) All dimensions are in inches.

(b) See Table I1 for tolerances.

(c) Service conditions and joint construction often dictate stub end length requirements. Therefore, the purchaser must specify long or short pattern fitting when ordering.

NOTES:

(1) Gasket face finish shall be in accordance with ASME B16.5 for raised face flanges.

(2) The lap thickness *T* shall not be less than nominal pipe wall thickness. See Table I1 for tolerance.

(3) When short pattern stub ends are used with larger flanges in Classes 300 and 600, and with most sizes in Classes 900 and higher, and when long pattern stub ends are used with larger flanges in Classes 1500 and 2500, it may be necessary to increase the length of the stub ends in order to avoid covering the weld with the flange. Such increases in length shall be a matter of agreement between the manufacturer and purchaser.

(4) When special facings such as tongue and groove, male and female, etc., are employed, additional lap thickness must be provided and such additional thickness shall be in addition to (not included in) the basic length *F*.

(5) These dimensions conform to the radius established for lap joint flanges in ASME B16.5.

(6) This dimension conforms to standard machined facings shown in ASME B16.5. The back face of the lap shall be machined to conform to the surface on which it seats. Where ring joint facings are to be applied, use dimension *K* as given in ASME B16.5.

Copyright © 2004 by the American Society of Mechanical Engineers.
No reproduction may be made of this material without written consent of ASME.

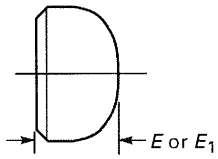

Table I10 Dimensions of Caps

Nominal Pipe Size (NPS)	Outside Diameter at Bevel	Length, E [Note (1)]	Limiting Wall Thickness for Length, E	Length, E_1 [Note (2)]
½	0.84	1.00	0.18	1.00
¾	1.05	1.00	0.15	1.00
1	1.32	1.50	0.18	1.50
1¼	1.66	1.50	0.19	1.50
1½	1.90	1.50	0.20	1.50
2	2.38	1.50	0.22	1.75
2½	2.88	1.50	0.28	2.00
3	3.50	2.00	0.30	2.50
3½	4.00	2.50	0.32	3.00
4	4.50	2.50	0.34	3.00
5	5.56	3.00	0.38	3.50
6	6.62	3.50	0.43	4.00
8	8.62	4.00	0.50	5.00
10	10.75	5.00	0.50	6.00
12	12.75	6.00	0.50	7.00
14	14.00	6.50	0.50	7.50
16	16.00	7.00	0.50	8.00
18	18.00	8.00	0.50	9.00
20	20.00	9.00	0.50	10.00
22	22.00	10.00	0.50	10.00
24	24.00	10.50	0.50	12.00
26	26.00	10.50	...	...
28	28.00	10.50	...	...
30	30.00	10.50	...	...
32	32.00	10.50	...	...
34	34.00	10.50	...	...
36	36.00	10.50	...	...
38	38.00	12.00	...	...
40	40.00	12.00	...	...
42	42.00	12.00	...	...
44	44.00	13.50	...	...
46	46.00	13.50	...	...
48	48.00	13.50	...	...

GENERAL NOTES:

(a) All dimensions are in inches.

(b) The shape of these caps shall be ellipsoidal and shall conform to the shape requirements as given in the ASME Boiler and Pressure Vessel Code.

NOTES:

(1) Length E applies for thickness not exceeding that given in column "Limiting Wall Thickness for Length, E."

(2) Length E_1 applies for thickness greater than that given in column "Limiting Wall Thickness" for NPS 24 and smaller. For NPS 26 and larger, length E_1 shall be by agreement between the manufacturer and purchaser.

Copyright © 2004 by the American Society of Mechanical Engineers.
No reproduction may be made of this material without written consent of ASME.

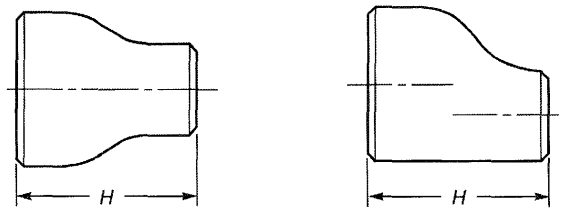

Table I11 Dimensions of Reducers

Nominal Pipe Size (NPS)	Outside Diameter at Bevel		End-to-End, *H*
	Large End	Small End	
3/4 × 1/2	1.05	0.84	1.50
3/4 × 3/8	1.05	0.68	1.50
1 × 3/4	1.32	1.05	2.00
1 × 1/2	1.32	0.84	2.00
1 1/4 × 1	1.66	1.32	2.00
1 1/4 × 3/4	1.66	1.05	2.00
1 1/4 × 1/2	1.66	0.84	2.00
1 1/2 × 1 1/4	1.90	1.66	2.50
1 1/2 × 1	1.90	1.32	2.50
1 1/2 × 3/4	1.90	1.05	2.50
1 1/2 × 1/2	1.90	0.84	2.50
2 × 1 1/2	2.38	1.90	3.00
2 × 1 1/4	2.38	1.66	3.00
2 × 1	2.38	1.32	3.00
2 × 3/4	2.38	1.05	3.00
2 1/2 × 2	2.88	2.38	3.50
2 1/2 × 1 1/2	2.88	1.90	3.50
2 1/2 × 1 1/4	2.88	1.66	3.50
2 1/2 × 1	2.88	1.32	3.50
3 × 2 1/2	3.50	2.88	3.50
3 × 2	3.50	2.38	3.50
3 × 1 1/2	3.50	1.90	3.50
3 × 1 1/4	3.50	1.66	3.50
3 1/2 × 3	4.00	3.50	4.00
3 1/2 × 2 1/2	4.00	2.88	4.00
3 1/2 × 2	4.00	2.38	4.00
3 1/2 × 1 1/2	4.00	1.90	4.00
3 1/2 × 1 1/4	4.00	1.66	4.00
4 × 3 1/2	4.50	4.00	4.00
4 × 3	4.50	3.50	4.00
4 × 2 1/2	4.50	2.88	4.00
4 × 2	4.50	2.38	4.00
4 × 1 1/2	4.50	1.90	4.00
5 × 4	5.56	4.50	5.00
5 × 3 1/2	5.56	4.00	5.00
5 × 3	5.56	3.50	5.00
5 × 2 1/2	5.56	2.88	5.00
5 × 2	5.56	2.38	5.00
6 × 5	6.62	5.56	5.50
6 × 4	6.62	4.50	5.50
6 × 3 1/2	6.62	4.00	5.50
6 × 3	6.62	3.50	5.50
6 × 2 1/2	6.62	2.88	5.50
8 × 6	8.62	6.62	6.00
8 × 5	8.62	5.56	6.00
8 × 4	8.62	4.50	6.00
8 × 3 1/2	8.62	4.00	6.00
10 × 8	10.75	8.62	7.00
10 × 6	10.75	6.62	7.00
10 × 5	10.75	5.56	7.00
10 × 4	10.75	4.50	7.00
12 × 10	12.75	10.75	8.00
12 × 8	12.75	8.62	8.00
12 × 6	12.75	6.62	8.00
12 × 5	12.75	5.56	8.00
14 × 12	14.00	12.75	13.00
14 × 10	14.00	10.75	13.00
14 × 8	14.00	8.62	13.00
14 × 6	14.00	6.62	13.00
16 × 14	16.00	14.00	14.00
16 × 12	16.00	12.75	14.00
16 × 10	16.00	10.75	14.00
16 × 8	16.00	8.62	14.00
18 × 16	18.00	16.00	15.00
18 × 14	18.00	14.00	15.00
18 × 12	18.00	12.75	15.00
18 × 10	18.00	10.75	15.00

Copyright © 2004 by the American Society of Mechanical Engineers.
No reproduction may be made of this material without written consent of ASME.

Table I11 Dimensions of Reducers (Cont'd)

Nominal Pipe Size (NPS)	Outside Diameter at Bevel		End-to-End, *H*
	Large End	Small End	
20 × 18	20.00	18.00	20.00
20 × 16	20.00	16.00	20.00
20 × 14	20.00	14.00	20.00
20 × 12	20.00	12.75	20.00
22 × 20	22.00	20.00	20.00
22 × 18	22.00	18.00	20.00
22 × 16	22.00	16.00	20.00
22 × 14	22.00	14.00	20.00
24 × 22	24.00	22.00	20.00
24 × 20	24.00	20.00	20.00
24 × 18	24.00	18.00	20.00
24 × 16	24.00	16.00	20.00
26 × 24	26.00	24.00	24.00
26 × 22	26.00	22.00	24.00
26 × 20	26.00	20.00	24.00
26 × 18	26.00	18.00	24.00
28 × 26	28.00	26.00	24.00
28 × 24	28.00	24.00	24.00
28 × 20	28.00	20.00	24.00
28 × 18	28.00	18.00	24.00
30 × 28	30.00	28.00	24.00
30 × 26	30.00	26.00	24.00
30 × 24	30.00	24.00	24.00
30 × 20	30.00	20.00	24.00
32 × 30	32.00	30.00	24.00
32 × 28	32.00	28.00	24.00
32 × 26	32.00	26.00	24.00
32 × 24	32.00	24.00	24.00
34 × 32	34.00	32.00	24.00
34 × 30	34.00	30.00	24.00
34 × 26	34.00	26.00	24.00
34 × 24	34.00	24.00	24.00
36 × 34	36.00	34.00	24.00
36 × 32	36.00	32.00	24.00
36 × 30	36.00	30.00	24.00
36 × 26	36.00	26.00	24.00
36 × 24	36.00	24.00	24.00
38 × 36	38.00	36.00	24.00
38 × 34	38.00	34.00	24.00
38 × 32	38.00	32.00	24.00
38 × 30	38.00	30.00	24.00
38 × 28	38.00	28.00	24.00
38 × 26	38.00	26.00	24.00
40 × 38	40.00	38.00	24.00
40 × 36	40.00	36.00	24.00
40 × 34	40.00	34.00	24.00
40 × 32	40.00	32.00	24.00
40 × 30	40.00	30.00	24.00
42 × 40	42.00	40.00	24.00
42 × 38	42.00	38.00	24.00
42 × 36	42.00	36.00	24.00
42 × 34	42.00	34.00	24.00
42 × 32	42.00	32.00	24.00
42 × 30	42.00	30.00	24.00
44 × 42	44.00	42.00	24.00
44 × 40	44.00	40.00	24.00
44 × 38	44.00	38.00	24.00
44 × 36	44.00	36.00	24.00
46 × 44	46.00	44.00	28.00
46 × 42	46.00	42.00	28.00
46 × 40	46.00	40.00	28.00
46 × 38	46.00	38.00	28.00
48 × 46	48.00	46.00	28.00
48 × 44	48.00	44.00	28.00
48 × 42	48.00	42.00	28.00
48 × 40	48.00	40.00	28.00

GENERAL NOTES:

(a) All dimensions are in inches.

(b) While the figure illustrates a bell-shaped reducer, the use of conical reducer is not prohibited.

Copyright © 2004 by the American Society of Mechanical Engineers.
No reproduction may be made of this material without written consent of ASME.

MANDATORY APPENDIX II
REFERENCES

The following is a list of standards and specifications referenced in this Standard, showing the year of approval.

ASME B16.5-2003, Pipe Flanges and Flanged Fittings NPS ½ Through NPS 24 Metric/Inch Standard
ASME B16.25-1997, Buttwelding Ends
ASME B16.49-2000, Factory-Made Wrought Steel Buttwelding Induction Bends for Transportation and Distribution Systems
ASME B31, Code for Pressure Piping
ASME B36.10M-2000, Welded and Seamless Wrought Steel Pipes
ASME B36.19M-1985(R1994), Stainless Steel Pipe
ASME BPVC-2001, ASME Boiler and Pressure Vessel Code

Publisher: The American Society of Mechanical Engineers (ASME International), Three Park Avenue, New York, NY 10016-5990; Order Department: 22 Law Drive, Box 2300, Fairfield, NJ 07007-2300

ASTM A 234-02, Standard Specification for Piping Fittings of Wrought Carbon Steel and Alloy Steel for Moderate and High Temperature Service
ASTM A 403-02, Standard Specification for Wrought Austenitic Stainless Steel Piping Fittings
ASTM A 420-02, Standard Specification for Piping Fittings of Wrought Carbon Steel and Alloy Steel for Low-Temperature Service
ASTM A 815/A 815M-01a, Standard Specification for Wrought Ferritic, Ferritic/Austenitic and Martensitic Stainless Steel Piping Fittings
ASTM B 361-02, Standard Specification for Factory-Made Wrought Aluminum and Aluminum-Alloy Welding Fittings
ASTM B 363-02, Standard Specification for Seamless and Welded Unalloyed Titanium and Titanium Alloy Welding Fittings
ASTM B 366-01e1, Standard Specification for Factory-Made Wrought Nickel and Nickel Alloy Fittings
ASTM E 29-02, Standard Practice for Using Significant Digits in Test Data to Determine Conformance With Specifications

Publisher: American Society for Testing and Materials (ASTM), 100 Barr Harbor Drive, West Conshohocken, PA 19428-2959

ISO 6708:1995, Pipework Components — Definition and Selection of DN (Nominal Size)
ISO 9000:2000, Quality Management Systems — Fundamentals and Vocabulary
ISO 9001:2000, Quality Management Systems — Requirements
ISO 9004:2000, Quality Management Systems — Guidelines for Performance Improvements

Publisher: International Organization for Standardization (ISO), 1 rue de Varembé, Case Postale 56, CH-1211, Genève 20, Switzerland/Suisse

Copyright © 2004 by the American Society of Mechanical Engineers.
No reproduction may be made of this material without written consent of ASME.

NONMANDATORY APPENDIX A
QUALITY SYSTEM PROGRAM

The products manufactured in accordance with this Standard shall be produced under a Quality System Program following the principles of an appropriate standard from the ISO 9000 series.[1] A determination of the need for registration and/or certification of the product manufacturer's quality system by an independent organization shall be the responsibility of the manufacturer. The detailed documentation demonstrating program compliance shall be available to the purchaser at the manufacturer's facility. A written summary description of the program utilized by the product manufacturer shall be available to the purchaser upon request. The *product manufacturer* is defined as the entity whose name or trademark appears on the product in accordance with the marking or identification requirements of this Standard.

[1] The series is also available from the American National Standards Institute (ANSI) and the American Society for Quality (ASQ) as American National Standards that are identified by a prefix "Q" replacing the prefix "ISO." Each standard of the series is listed in Mandatory Appendix II.

Copyright © 2004 by the American Society of Mechanical Engineers.
No reproduction may be made of this material without written consent of ASME.

ASME B16.9-2003 INTERPRETATIONS

Replies to Technical Inquiries
January 2002 through October 2002

FOREWORD

This publication includes all of the written replies issued between the indicated dates by the Secretary, speaking for the ASME B16 Committee, Standardization of Valves, Flanges, Fittings, and Gaskets, to inquiries concerning interpretations of technical aspects of ASME B16.9, Factory-Made Wrought Buttwelding Fittings.

These replies are taken verbatim from the original letters except for a few typographical corrections and some minor editorial corrections made for the purpose of improved clarity. In some few instances, a review of the interpretation revealed a need for corrections of a technical nature; in these cases, a corrected interpretation follows immediately after the original reply.

These interpretations were prepared in accordance with the accredited ASME procedures. ASME procedures provide for reconsideration of these interpretations when or if additional information is available that the inquirer believes might affect the interpretation. Further, persons aggrieved by this interpretation may appeal to the cognizant ASME Committee or Subcommittee. ASME does not "approve," "certify," "rate," or "endorse" any item, construction, proprietary device, or activity.

Copyright © 2004 by the American Society of Mechanical Engineers.
No reproduction may be made of this material without written consent of ASME.

Interpretation: 03-1

Subject: ASME B16.9-2001, Para. 9.4

Date Issued: January 15, 2002

File: B16-01-007

Question (1): Does ASME B16.9-2001 permit the successful proof test data of a B16.9-2001 NPS 8-Schedule 20, 90 deg elbow ($t/D = 0.29$) to be extended to cover the proof test requirement for a B16.9-2001 NPS 20-Standard Schedule, 90 deg elbow ($t/D = 0.018$) under para. 9.4.2?

Reply (1): No. Paragraph 9.4.1 applies as well.

Question (2): Does ASME B16.9-2001 permit the successful proof pressure test data of a B16.9 fitting such as a tee to be applied to qualify a fitting such as an elbow, cap, or reducer?

Reply (2): No. See para. 9.4. Extension of test data shall be from a representative fitting.

Interpretation: 03-2

Subject: ASME B16.9-2001, Paras. 2.2 and 9

Date Issued: October 10, 2002

File: B16-02-006

Question: Does ASME B16.9-2001 have specific requirements for increasing the wall thickness above the minimum for fittings or particular areas on fittings to meet the pressure rating requirements?

Reply: No. See paras. 9 and 2.2.

Copyright © 2004 by the American Society of Mechanical Engineers.
No reproduction may be made of this material without written consent of ASME.

AMERICAN NATIONAL STANDARDS FOR PIPING, PIPE FLANGES, FITTINGS, AND VALVES

Scheme for the Identification of Piping Systems A13.1-1996
Pipe Threads, General Purpose (Inch) B1.20.1-1983 (R1992)
Dryseal Pipe Threads (Inch) B1.20.3-1976 (R1998)
Cast Iron Pipe Flanges and Flanged Fittings: Classes 25, 125, and 250 ..... B16.1-1998
Malleable Iron Threaded Fittings: Classes 150 and 300 ..... B16.3-1998
Gray Iron Threaded Fittings: Classes 125 and 250 ..... B16.4-1998
Pipe Flanges and Flanged Fittings NPS $\frac{1}{2}$ Through NPS 24 Metric/Inch Standard B16.5-2003
Factory-Made Wrought Buttwelding Fittings B16.9-2003
Face-to-Face and End-to-End Dimensions of Valves B16.10-2000
Forged Fittings, Socket-Welding and Threaded B16.11-2001
Cast Iron Threaded Drainage Fittings B16.12-1998
Ferrous Pipe Plugs, Bushings, and Locknuts with Pipe Threads B16.14-1991
Cast Bronze Threaded Fittings: Classes 125 and 250 ..... B16.15-1985 (R1994)
Cast Copper Alloy Solder Joint Pressure Fittings B16.18-2001
Metallic Gaskets for Pipe Flanges: Ring-Joint, Spiral-Wound, and Jacketed B16.20-1998
Nonmetallic Flat Gaskets for Pipe Flanges B16.21-1992
Wrought Copper and Copper Alloy Solder Joint Pressure Fittings B16.22-2001
Cast Copper Alloy Solder Joint Drainage Fittings: DWV B16.23-2002
Cast Copper Alloy Pipe Flanges and Flanged Fittings: Class 150, 300, 400, 600, 900, 1500, and 2500 ..... B16.24-2001
Buttwelding Ends B16.25-1997
Cast Copper Alloy Fittings for Flared Copper Tubes B16.26-1988
Wrought Steel Buttwelding Short Radius Elbows and Returns B16.28-1994
Wrought Copper and Wrought Copper Alloy Solder Joint Drainage Fittings — DWV B16.29-2001
Manually Operated Metallic Gas Valves for Use in Gas Piping Systems up to 125 psig (Sizes $\frac{1}{2}$ Through 2) B16.33-1990
Valves — Flanged, Threaded, and Welding End B16.34-1996
Orifice Flanges B16.36-1996
Large Metallic Valves for Gas Distribution (Manually Operated, NPS $2\frac{1}{2}$ to 12, 125 psig Maximum) B16.38-1985 (R1994)
Malleable Iron Threaded Pipe Unions B16.39-1998
Manually Operated Thermoplastic Gas Shutoffs and Valves in Gas Distribution Systems B16.40-2002
Functional Qualification Requirements for Power Operated Active Valve Assemblies for Nuclear Power Plants B16.41-1983 (R1989)
Ductile Iron Pipe Flanges and Flanged Fittings, Classes 150 and 300 ..... B16.42-1998
Manually Operated Metallic Gas Valves for Use in Above Ground Piping Systems Up To 5 psi B16.44-2002
Cast Iron Fittings for Sovent® Drainage Systems B16.45-1998
Large Diameter Steel Flanges (NPS 26 Through NPS 60) B16.47-1996
Steel Line Blanks B16.48-1997
Factory-Made Wrought Steel Buttwelding Induction Bends for Transportation and Distribution Systems B16.49-2000
Wrought Copper and Copper Alloy Braze-Joint Pressure Fittings B16.50-2001
Power Piping B31.1-2001
Fuel Gas Piping (not an ANSI standard) B31.2-1968
Process Piping B31.3-2002
Pipeline Transportation Systems for Liquid Hydrocarbons and Other Liquids B31.4-2002
Refrigeration Piping and Heat Transfer Components B31.5-2001
Gas Transmission and Distribution Piping Systems B31.8-1999
Building Services Piping B31.9-1996
Slurry Transportation Piping Systems B31.11-2002
Manual for Determining the Remaining Strength of Corroded Pipelines B31G-1991
Welded and Seamless Wrought Steel Pipe B36.10M-2000
Stainless Steel Pipe B36.19M-1985 (R1994)
Self-Operated and Power-Operated Safety-Related Valves Functional Specification Standard N278.1-1975 (R1992)

The ASME Publications Catalog shows a complete list of all the Standards published by the Society. For a complimentary catalog, or the latest information about our publications, call 1-800-THE-ASME (1-800-843-2763).

Copyright © 2004 by the American Society of Mechanical Engineers.
No reproduction may be made of this material without written consent of ASME.

ASME Services

ASME is committed to developing and delivering technical information. At ASME's Information Central, we make every effort to answer your questions and expedite your orders. Our representatives are ready to assist you in the following areas:

ASME Press
Codes & Standards
Credit Card Orders
IMechE Publications
Meetings & Conferences
Member Dues Status
Member Services & Benefits
Other ASME Programs
Payment Inquiries
Professional Development
Short Courses
Publications
Public Information
Self-Study Courses
Shipping Information
Subscriptions/Journals/Magazines
Symposia Volumes
Technical Papers

How can you reach us? It's easier than ever!

There are four options for making inquiries* or placing orders. Simply mail, phone, fax, or E-mail us and an Information Central representative will handle your request.

Mail
ASME
22 Law Drive, Box 2900
Fairfield, New Jersey
07007-2900

Call Toll Free
US & Canada: 800-THE-ASME
(800-843-2763)
Mexico: 95-800-THE-ASME
(95-800-843-2763)
Universal: 973-882-1167

Fax—24 hours
973-882-1717
973-882-5155

E-Mail—24 hours
Infocentral@asme.org

* Information Central staff are not permitted to answer inquiries about the technical content of this code or standard. Information as to whether or not technical inquiries are issued to this code or standard is shown on the copyright page. All technical inquiries must be submitted in writing to the staff secretary. Additional procedures for inquiries may be listed within.
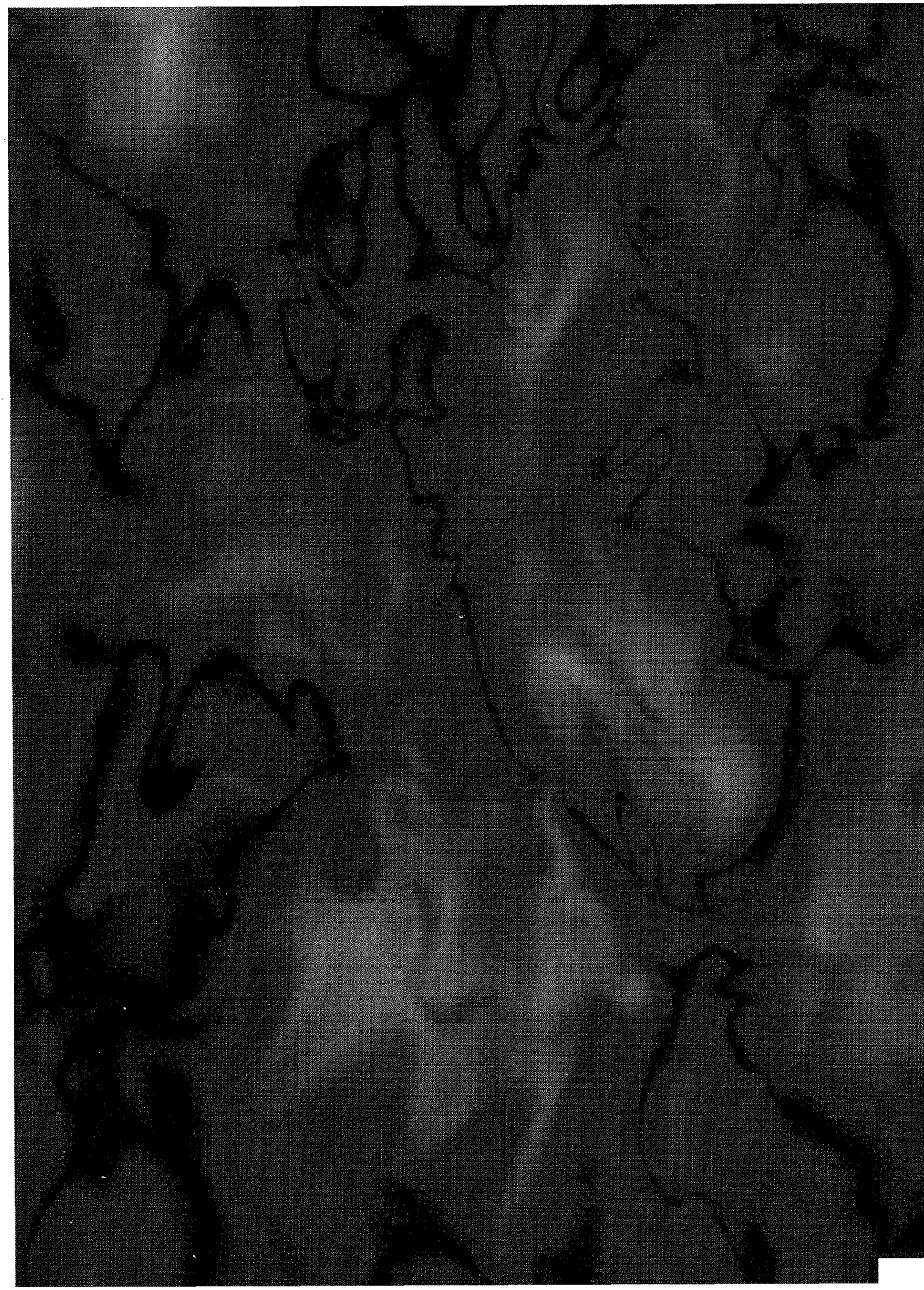
Copyright © 2004 by the American Society of Mechanical Engineers.
No reproduction may be made of this material without written consent of ASME.