LCD Quick Setup Guide
15” and 12” LCD Monitors

Quick Setup Guide FPM-150 and FPM-150-TS *Page 1 of 2*

Unit Setup:

1. Remove the unit from its packaging.

The following parts should be included:

The FPM-150 or FPM-150T Panel Mount 15" LCD Display

- AC Power Cord
- Video [VGA] Cable For Connection To You PC
- RS-232 Cable [If the unit is fitted with a touch screen]
- Mounting Nuts
- CD ROM & 3.5” Floppy Disks

Pre Installation: We are assuming that you are going to try the unit on a bench before you install it in your control panel. If you are operating this unit from an AutomationDirect. com computer, it has been preadjusted at the factory and should require little or no further adjustment. If you are satisfied with the display leave it alone. If you are installing the touch driver, see the Touch Screen Driver Quick Start Guide.

Place the unit face (screen) down on a **clean** smooth surface.

IMPORTANT: Attach the following cables to your PC FIRST. This will prevent the unit from being tipped over if you pull on the cables.

Attach the following as described.

- Video: the High Density D15 Female Connector. (the heavier of the 2 cables).
- Touch: RS-232-D9 Female end to the PC, D9 Male end to the Monitor.
  IMPORTANT: Note the Com port on the computer you are using for the touch screen. This will be required during touch screen driver configuration.
- Plug the AC Power Cord into the display then into a standard power receptacle.

If the unit is not on, turn it on now. The power switch is located at the AC power connection on the FPM-150. The fan should come on and you will see a “No Video” screen if the computer is not running. After approximately 10 seconds, the unit will go into shutdown if there is no video signal. The unit will turn itself back on once you power up your PC.

Running The Display:

At this time you can turn on your computer.

Your initial picture [from the computer] will normally be the computer POST information [looks like DOS] and the computer will check its RAM.

The FPM-150 is capable of displaying any of several standard graphics modes. These are what is referred to as VGA (640x480), SVGA (800x600) or XGA (1024x768) video modes. As your computer boots, you will see the standard Microsoft Windows “Splash” screens as you boot into the operating system. Once the computer has completely booted into Windows, you will want to adjust the screen.

Adjusting the screen is a very simple procedure and is outlined in the next section.

VICPAS
HMI Parts Center

Quick Setup Guide FPM-150 and FPM-150-TS Page 2 of 2

Adjusting The LCD:

The FPM-150 series displays incorporate a microprocessor-based converter card, which converts analog video to what is termed digital RGB (Red, Green, Blue) for the LCD. This same microprocessor will automatically adjust the picture to the center of the LCD and resize to full screen.

Adjusting The LCD Video Settings:

- Select “Menu” from rear membrane keypad. This will bring up the OSM (On Screen Menu)
- “AutoAdjust” is the first selection.
- Press the “+” or “-” key

The screen will go out temporarily. After the unit has completed adjusting, press the menu key to exit the OSM. This will save the settings.

The Windows desktop should be centered, full screen, and stable. The unit is now ready for installation of the touch screen driver installation, if the unit is so equipped. See the Touch Screen Driver Quick Start Guide.

VICPAS
HMI Parts Center

Quick Setup Guide FPM-120 and FPM-120-TS Page 1 of 2

Unit Setup:

1. Remove the unit from its packaging.

The following parts should be included:

The FPM-120 or FPM-120-TS Panel Mount 12.1" LCD Display

- AC Power Cord
- Video [VGA] Cable For Connection To You PC
- RS-232 Cable [If the unit is fitted with a touch screen]
- Mounting Nuts
- CD ROM & 3.5” Floppy Disks

Pre Installation: We are assuming that you are going to try the unit out on a bench before you install it in your control panel. If you are operating this unit from an AutomationDirect. com computer, it has been preadjusted at the factory and should require little or no further adjustment. If you are satisfied with the display leave it alone. If you are installing the touch driver see the Touch Screen Driver Quick Start Guide.

Place the unit face (screen) down on a **clean** smooth surface.

IMPORTANT: Attach the following cables to your PC FIRST. This will prevent the unit from being tipped over if you pull on the cables.

Attach the following as described;

- Video: the High Density D15 Female Connector. (the heavier of the 2 cables).
- Touch: RS-232-D9 Female end to the PC, D9 Male end to the Monitor.
  IMPORTANT: Note the Com port on the computer you are using for the touch screen. This will be required during touch screen driver configuration.
- Plug the AC Power Cord into the display then into a standard power receptacle.

If the unit is not on turn it on now. The power switch is located at the AC power connection on the FPM-120. The fan should come on and you will see a “No Video” screen if the computer is not running. After approximately 10 seconds the unit will go into shutdown if there is no video signal applied. The unit will turn itself back on once you power up your PC.

Running The Display:

At this time you can turn on your computer.

Your initial picture [from the computer] will normally be the computer POST information [looks like DOS] and the computer will check its RAM.

The FPM-120 is capable of displaying any of several standard graphics modes. These are what is referred to as VGA (640 x 480) & SVGA (800 x 600) video modes. As your computer boots, you will see the standard Microsoft Windows “Splash” screens as you boot into the operating system. Once the computer has completely booted into Windows, you may want to adjust the screen.

Adjusting the screen is a very simple procedure and is outlined in the next section.

VICPAS
HMI Parts Center

Quick Setup Guide FPM-120 and FPM-120-TS Page 1 of 2

Adjusting The LCD:
The FPM-120 series displays incorporate a microprocessor-based converter card, which converts analog video to what is termed digital RGB (Red, Green, Blue) for the LCD. This same microprocessor *may* require some *minor* adjustment to get a stable centered full screen display. If you are satisfied with the picture, you are done If not, please proceed to the next section.

Adjusting The LCD Video Settings:
The FPM-120 series displays are factory adjusted with an Automationdirect.com computer and should be very close to optimal settings. The following procedure explains how to achieve a stable, centered full screen display. This adjustment may be required to correct minor deviations between the LCD and your video card.

Please follow these steps in sequence for the best results:

1 Close All Programs, leaving only the Windows Desktop.
2 Select “Menu” from rear membrane keypad. This will bring up the OSM (On Screen Menu)
3 Use the Up and Dn (Down) keys to select the function you wish to adjust.
4 Select **Horizontal Position** and use the + and - keys to position the left side of the picture with the left edge of the LCD
5 Select **Vertical Position** and use the + and - keys to position the bottom of the picture with the bottom edge of the LCD
6 Select **Clock** and use the + and - keys to position the right edge of the picture with the right edge of the LCD.

There are several other selections that are available on the Menu, but these probably do not require further adjustment.

- Brightness - LCD White Levels
- Contrast - LCD Black Levels
- Clock Phase - Adjusts the analog sampling rate and is used for adjusting any minor banding. This would be noticed if some vertical lines of text (Like a lower case L “l”) may look like 1 pixel wide in one area of the screen and 2 pixels wide in a different area of the screen. This is adjusted at the factory and should not require further adjustment.
- Language - For international customers

After you have adjusted the unit to your satisfaction, allow the unit to display the OSM for approximately 15 seconds and the unit will automatically save all updated settings, and the OSM will go off.

Now the Windows desktop should be centered, full screen, and stable. The unit is now ready for installation of the touch screen driver, if so equipped. See the Touch Screen Driver Quick Start Guide included with your unit.

If you do not have a touch screen, setup is complete and the unit is ready for use.

VICPAS
HMI Parts Center

Touch Screen Driver Quick Start Guide

Windows 98 Windows NT Windows 2000

AutomationDirect.com
3505 Hutchinson Rd
Cumming, GA 30040

Telephone 800.633.0405
Fax 770.889.7876
info@AutomationDirect.com

www.AutomationDirect.com

VICPAS
HMI Parts Center

Touch Screen Driver Installation *Windows 98*

Touch Screen Driver Installation:
If your display is fitted with the optional touch screen interface, the following section will outline installation and set up. If the unit does not have a touch screen, your configuration is complete.

To Install The Touch Screen Driver:
Things you will need to **know** or **have** to install the Touch Driver.

- What Operating System you are using. **Windows 98**
- What Serial Port you are connected to. **Com 1** **Com 2**
- The type of touch screen. **Smartset**
- The CD ROM or Floppy disk included with the system.

Installing The Touch Screen Driver: Windows 98
Insert the 3 1/2" Floppy Marked Windows 98 / 2000 Touch Driver
Click "Start"
Run
Browse (A Drive)
Select the folder for Win98
Select the XXXXX.EXE [Where XXXXX is the File Name. This will create a folder and expand and copy the necessary files into that folder.]
UnZip the XXXXX.exe file

Click "Start"
Run
Browse (Open the folder where you installed the drivers)
Select The **Setup.exe** - Then Run the the installation utility.
Select SmartSet Controller Com1 *or*
Select SmartSet Controller Com2
Restart the computer - When the system restarts you will will be prompted to calibrate the touch screen. Touch each of the 3 targets as directed. If the unit does not does not respond to your calibration touches, then you have probably selected the wrong Com port. If so, reinstall the driver and select the correct Com port.

You are now ready to use your touch screen.

NOTE: The touch screen calibration information is maintained in the computer. If you change computers, you will need to reinstall the touch screen driver software and recalibrate.

If for any reason the touch screen performance is unsatisfactory, you can recalibrate at any time. This is done from the ELO icon under the Windows control panel

VICPAS
HMI Parts Center

Touch Screen Driver Installation *Windows NT 4.0*

Touch Screen Driver Installation:

If your display is fitted with the optional touch screen interface, the following section will outline installation and set up. If the unit does not have a touch screen, your configuration is complete.

To Install The Touch Screen Driver:

Things you will need to **know** or **have** to install the Touch Driver.

- What Operating System you are using. **Windows NT 4.0**
- What Serial Port you are connected to. **Com 1** **Com 2**
- The type of touch screen. **Smartset**
- The CD ROM or Floppy disk included with the system.

Installing The Touch Screen Driver: Windows NT 4.0

Insert the 3 1/2" Floppy Marked Windows NT 4.0 Touch Driver
Click "Start"
Run
Browse (A Drive)
Select the folder for WinNT
Select XXXXX.EXE [Where XXXXX is the File Name. This will create a folder and expand and copy the necessary files into that folder.]
UnZip the XXXXX.exe file

Click "Start"
Run
Browse (Open the folder where you installed the drivers)
Select The **Setup.exe** - Then Run the the installation utility.
Select **Next**
Select **Yes** - To the license agreement
Select **Next** - To the default installation folder
Select **Next** - For Single Monitor installation
Select the **Com Port** and **Next**
Select **Finish** to Restart the system

Restart the computer - When the system restarts you will will be prompted to calibrate the touch screen. Touch each of the 3 targets as directed. If your system does not respond to your calibration touches, then you have probably selected the wrong Com port. If so, press the Esc key on the keyboard. Go to the ELO icon under Windows Control Panel. Select the correct Com Port, and Restart the computer. Once restarted, select the ELO icon under Windows Control Panel, and select calibrate, then touch each of the 3 targets as they are displayed.

You are now ready to use your touch screen.

NOTE: The touch screen calibration information is maintained in the computer. If you change computers, you will need to reinstall the touch screen driver software and recalibrate.

If for any reason the touch screen performance is unsatisfactory, you can recalibrate at any time. This is done from the ELO icon under the Windows control panel

VICPAS
HMI Parts Center

Touch Screen Driver Installation *Windows 2000*

Touch Screen Driver Installation:
If your displays is fitted with the optional touch screen interface, the following section will outline the installation and set up. If the unit does not have a touch screen your configuration is complete.

To Install The Touch Screen Driver:
Things you will need to **know** or **have** to install the Touch Driver.

- What Operating System you are using. **Windows 2000**
- What Serial Port you are connected to. **Com 1** **Com 2**
- The CD ROM or Floppy disk included with the system.

Installing The Touch Screen Driver: Windows 2000
Insert the 3 1/2" Floppy Marked Windows 95/98/2000 Touch Driver
Click "Start"
Run
Browse (A or B Drive)
Select the folder for Win2000
Select XXXXX.EXE [Where XXXXX is the 98 or 2000 File Name. This will create a folder and expand and copy the necessary files into that folder.]
UnZip the XXXXX.exe file

Click "**Start**"
Run
Browse (Go to the folder where you installed the drivers)
Select The **Setup.exe** - The RUN
The installation utility will now run.
Click **Next**
Click **Yes** To accept the license agreement
Select The **COM Port** that the touch screen is connected to
Select **Next**
The driver will now start to install
Select **YES** - To continue
Select **Finish**
Remove the floppy disk and restart the system. Select **YES** to restart
Touch each of the 3 targets as directed
When the system restarts touch each of the 3 targets as directed to calibrate (align) the touch screen.

If your system does not respond to your calibration touches, press the Esc key on the keyboard. Go to the ELO icon under the Windows Control Panel. Select the correct Com Port, then Restart the computer. Select the ELO icon again and select **Align** and calibrate the touch screen then touch each of the 3 targets as they are displayed.

You are now ready to use your touch screen.

NOTE: The touch screen calibration information is maintained in the computer. If you change computers, you will need to reinstall the touch screen driver software and recalibrate.

If for any reason the touch screen performance is unsatisfactory, you can recalibrate at any time. This is done from the ELO icon under the Windows control panel

VICPAS
HMI Parts Center

FLI-150
FLI-150-TS

LCD Monitor User Guide

Revised 12/02

VICPAS
HMI Parts Center

FLI-150 & FLI-150-TS

Table Of Contents

Section 1 Introduction
About LCD Monitors
Product Safety Precautions

Section 2 Display Setup
Included Parts
Connecting Your Display

Section 3 Getting Started
Display Features
Getting Started
Adjusting the Display
Using the Auto-Adjust
OSD (On Screen Display) Adjustments

Section 4 Touch Screen Set up
Introduction to Touch Screens
Touch Screen Driver Installation
- Windows 98
- Windows NT 4.0
- Windows 2000
- Windows XP

Section 5 Mounting Instructions

Section 6 Trouble Shooting Tips

Section 7 Cleaning and Maintenance

Section 8 Appendices
A-VGA Pin Assignment
B-RS-232 Pin Assignment
C-General Specifications
D-Mounting Dimensions

VICPAS
HMI Parts Center

1 LCD Introduction

Section

About LCD Monitors

What you gain by using an LCD monitor for your industrial display is the future of display technology. CRTs although they have dropped in cost significantly, do not offer the performance, reliability, and mounting options available with LCDs. LCD monitors consist primarily of an LCD, video board and a backlight. The LCD determines to a large extent the viewing angle, brightness and contrast. Beyond that it is the function of the video board, which converts the analog RGB (Red, Green, Blue) signals from a standard video card to a high quality, digital RGB that the LCD can display.

LCD monitors can can be set for one or more of the following resolutions:

VGA: 640 x480
SVGA: 800x600
XGA 1024 x 768
SXGA 1280 x1024
UXGA 1600x 1200

Note: The VGA acronym stands for Video Graphics Adapter. It is used to describe both the most common type of display interface used by PC's and lowest resolution setting for this interface. Originally only the VGA [640x480] resolution was available on a VGA interface. Today all of the above interfaces are available on a VGA interface, but not all monitors support all resolutions. . The native resolution of the LCD is normally the maxium resolution that the LCD can display, and is the resolution that the LCD will exhibit the best display charastics Check the monitor specifications (Appendix C) for the resolutions supported by this monitor.

Recently the video card has taken on a new role. It is the responsibility of this device to "scale" a particular video resolution to the "native" resolution of the LCD. This enables a computer set to output a VGA [640x480] resolution signal to be properly displayed on an XGA [1024x768] LCD screen. Without the scaling engine, the displayed picture would be in the center $^1/_3$ of the LCD. The scaling engine mathematically converts the 640x480 to 1024x768. This my sound simple but it is in fact a complex algorithm that adjusts for different aspect ratios and pixel alignment, essentially smoothing text and graphics to produce a picture that is pleasant to the eye.

All Automationdirect.com displays from 12.1" (800x600) to 18.1" (1280x1024) incorporate scaling engines in the converter card.

VICPAS
HMI Parts Center

Safety Precautions

CAUTION: SHUT OFF YOUR TOUCH SCREEN BEFORE CLEANING!!

IF YOUR DISPLAY IS A –TS MODEL, THAT IS A TOUCH SCREEN DISPLAY, THE SCREEN WILL BE ACTUATED BY CLEANING. PRESSING ON THE SCREEN WHILE CLEANING WILL BE SEEN AS A TOUCH TO THE SYSTEM WHICH COULD CREATE A POTENTIALLY DANGEROUS CONDITION!!

- Do not attempt to service this display yourself. The rear chassis has a seal so that non qualified personal will not expose themselves to dangerous voltages or other risks.

- To protect from electrical shock, unplug the display power supply from the wall before moving.

- Do not use this display near water

- Do not place any heavy objects on the power cords. Damage may cause electrical shock.

- Unplug the power supply from the wall or unit if one of the following conditions exists.
  - Power cord or plug is damaged or frayed
  - Liquid is spilled into the display or the display is exposed to rain or water.
  - The display does not operate normally when the operating instructions are followed.
  - The display has been dropped or the enclosure has been damaged.
  - The display exhibits a distinct change in performance, indicating a need for service.

- Ensure that sufficient space is available around the display to provide air circulation for cooling.

- Ensure that the ambient air temperature will not exceed the specified maximum temperature.

- Do not expose the display to direct sunlight or heat.

2 Section Display Setup

Included Parts

Your LCD monitor package will consist of the primary components listed below.

Open shipping container and lay all components on a flat clean surface.

- FLI-150(-TS) LCD Monitor
- 6 ft Video Cable
- 6 Ft DC Power Cable
- 6 ft RS232 Touch Interface Cable (touch screen units only)
- 10-32 Mounting Hardware. (For use with Panel Mount)
- Documentation and Driver CD ROM

Connecting Your Display

1. Connect all cables to the computer first. This includes the VGA cable, and if the unit has a touch screen, the RS 232 serial touch screen connection.
2. After connecting the cables between the LCD monitor and the computer, connect DC power (External power supply such AutomationDirect's PS-MON is required). Turn on the power.
4. If your computer is off, turn on your computer.
5. Your display should now operate as a normal computer display, displaying the computers BIOS screens and booting into Windows or other operating system.

Note: If for any reason the display goes blank and/or displays "out of Range" or "No Input Signal" message on the screen, your computer or video source may be putting out a signal that is incompatible with the FLI-150(-TS). If this happens, reboot the computer with the previous display and adjust the display settings to be within the FLI-150(-TS) specifications (see Appendix C). Below is are the most common reasons a display may not operate correctly:

1. The resolution is to high or low for the LCD.
2. The refresh rate is set to high. Refresh on an LCD is different than a CRT. Set the refresh to 60Hz. CRT's need a high refresh rate to avoid flicker. The refresh rate has no impact on an LCD.
3. The power source is incorrect, or there is no power. Check if the rear LED is ON or blinking. If the LED is not lit, check to be sure there is power to the unit.
4. The unit is malfunctioning. If you believe this to be true, disconnect the video cable from the rear of the LCD and connect to a known good display. If the computer display is working satisfactory and the video is within the appropriate range, then contact AutomationDirect.com technical support.

VICPAS
HMI Parts Center

3 Getting Started

Section

Display Features

- The FLI-150(-TS) is capable of displaying 16M (24 Bit) colors in a continuous spectrum. The high contrast LCD enhances the image with no geometric distortion.
- FLI-150(-TS) Series directly accepts an analog 3,4, or 5 wire RGB with separate H/V, composit, or sync on green. This is the standard PC video signal.
- The FLI-150(-TS) Series is auto synchronous adjusting the display to the appropriate input between VGA and SXGA (Note: XGA is the displays native mode, SXGA is interpolated).
- The FLI 150(-TS) Series is supplied with a Anti-Glare Touch Screeen [TS models] or an Anti-Glare impact window on non touch screen models.
- The FLI-150(-TS) Requires an external 12 VDC power supply such AutomationDirect's PS-MON is required. Turn on the power.

Adjusting the Display

The FLI-150 (-TS) Series display has an embedded microprocessor on the converter card [the electronics that drive the LCD], and has been recently updated with a more powerful chip set. In most cases the unit will require very little if any user intervention to operate correctly. That is, produce a sharp, stable picture.

The micoprocessor in the display has the capability to adjust itself to the computer to which it is attached. This auto-adjustment will take place when the unit is first installed and connected to a computer, if the video input changes, or the user initates it. If the picture is not satisfactory, the first step is to allow the unit to attempt to re-adjust itself to your computer.

Located on the rear of the unit is a membrane keypad used for adjusting the display.. See figure 1 below:

Figure 1

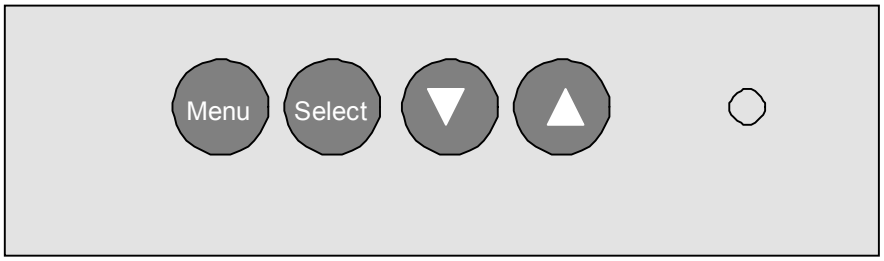

VICPAS
HMI Parts Center

Using the Auto-Adjust

The FLI-150(-TS) will attempt to adjust itself to your computers current video mode. If the picture is stable, and centered vertically and horizontally the auto-adjustment is complete. If however the picture is not stable, and centered vertically and horizontally you can re-initate the auto adjustment. Once you have the unit displaying the resolution you desire for your application do the following: Press and release the “Select” button on the membrane. This will place the unit into a “Geometry Auto Adjust” mode. This operation will adjust the picture so it is centered both vertically and horizontally on the LCD screen. It will also make the necessary adjustments to the internal clock timing so that the picture is stable (without any decernable pixel jitter).

After having completed this step you may wish to adjust the color balance. This procedure adjusts for any imbalance in the Red, Green, and Blue levels from the video cable or video card. This is accomplished using the LCDs OSD (On Screen Menu) system.

OSD (On Screen Display) Adjustments

There are four membrane buttons (see Fig 1, above) located on the rear of the unit. They will activate the OSD and allow navigation to all adjustments if your unit requires adjustment.

Press MENU key,OSD screen appears. [See Figure 2]

Press UP/DOWN key, you can move between the five primary functions:
Press Select key at Picture group to highlight this sub menu. You can now navigate the sub menu using the UP/DOWN keys. To make an adjustment to an item press Select and use the UP/DOWN buttons to make your adjustments

At anytime, press the Menu button Two times to Exit and Save your settings.
This convention of Menu, Navigate, Select Sub Menu, Navigate, Select Item and adjust is used throughout the OSD screen process.

Press MENU key to return previous state and press MENU key twice to exit OSD.

VICPAS
HMI Parts Center

PICTURE

Press MENU key to bring up the OSD. Press UP/DOWN key, to move between the 5 primary screen functions. Press the Select button at Picture, to select it. Press the UP/DOWN key, you can now move between functions and press Select to adjust the value of each item with the UP/DOWN key. Press MENU key to return previous state and press MENU key twice to exit OSD.

- BRIGHTNESS Function of adjusting main screen brightness.
- CONTRAST Function of adjusting main screen contrast.
- FREQUENCY Function of adjusting main screen sampling clock frequency.
- PHASE Function of adjusting main screen sampling clock phase.
- H POSITION Function of adjusting the horizontal position of main screen .
- V POSITION Function of adjusting the vertical position of main screen .

ADVANCED

Press MENU key to bring up the OSD. Press UP/DOWN key, to move between the 5 primary screen functions. Press the Select button at Advanced, to select it. Press the UP/DOWN key, you can now move between functions and press Select to adjust the value of each item with the UP/DOWN key. Press MENU key to return previous state and press MENU key twice to exit OSD.

- Color Temp Function of setup of main color. (Bluish, Normal, Reddish)
- User RED Function of adjusting value of RED.
- User BLUE Function of adjusting value of BLUE.
- User GREEN Function of adjusting value of GREEN.
- Gamma Function of adjusting value of color ratio.

COLOR WARP

Press MENU key to bring up the OSD. Press UP/DOWN key, to move between the 5 primary screen functions. Press the Select button at Color Warp, to select it. Press the UP/DOWN key, you can now move between functions and press Select to adjust the value of each item with the UP/DOWN key. Press MENU key to return previous state and press MENU key twice to exit OSD

- Color Warp Function of adjusting curve on main screen.
- Mode Function of selecting curve on main screen.
- Custom Center Function of adjusting color warp on center.
- Custom range Function of adjusting range on color warp.
- Saturation Function of adjusting saturation warp on center.
- Custom hue Function of adjusting the tone of color.

OPTIONS

Press MENU key to bring up the OSD. Press UP/DOWN key, to move between the 5 primary screen functions. Press the Select button at Options, to select it. Press the UP/DOWN key, you can now move between functions and press Select to adjust the value of each item with the UP/DOWN key. Press MENU key to return previous state and press MENU key twice to exit OSD

- Osd V Pos Function of adjusting the vertical position of OSD image .
- Osd H Pos Function of adjusting the horizontal position of OSD image.
- Osd Function of moving OSD image quickly.

UTILITIES

Press MENU key to bring up the OSD. Press UP/DOWN key, to move between the 5 primary screen functions. Press the Select button at Utilities, to select it. Press the UP/DOWN key, you can now move between functions and press Select to adjust the value of each item with the UP/DOWN key. Press MENU key to return previous state and press MENU key twice to exit OSD

- OSD Timeout Function of adjusting OSD disappear time .
- OSD Bk ground Function of adjusting at transparancy on main screen to osd image.
- Auto Adjust Function of finding optimized main screen automatically.
- Factory Reset Function of resetting all value on OSD.
- Power On Time Function of indicating system on time.
- Bklight OnTime Function of indicating panel on time.

VICPAS
HMI Parts Center

4 Touch Screen Setup

Section

Introduction to Touch Screens

Touch screen interfaces have become the standard interface in the past 5 years. They are, rugged, reliable, extremely flexible and easier than ever to implement! The universal acceptance of the Windows GUI [Graphical User Interface] along with the extensive use of a mouse interface has significantly accelerated the use of a touch interface. Basically think of your touch screen as if it were a mouse.

AutomationDirect.com touch systems are mouse emulators. By installing a software driver and connecting to a serial port, the touch screen will support all the primary mouse functions:

The FLI-150(-TS) touch screen interface, is a high resolution, analog resistive. Following is a quick explanation of what all this means.

High Resolution: The touch screen resolution is 400 ppi [points per inch]

Analog Resistive: The actual touch glass is an analog device. Meaning there is a very low voltage applied to the X and Y axis of the touch screen. This current is applied to ITO [Iridium Tin Oxide] that is sputtered onto a polyester membrane. When you touch the screen you are changing the resistance on both the X and Y axis, producing an analog value that references a particular location.
This type of screen can be activated with a gloved finger or mechanical stylus.

The touch screen itself is connected to electronics [internal to the display unit] that provide the Analog to Digital conversion. When the screen is touched, the electronics convert the analog voltage to a digital value and add a "Mouse Click". This touch data is sent out from the display serial port to the PC serial port where the touch driver presents the data to the operating systems as if it were from a normal PC mouse. When the touch is released the new XY location is sent along with a "Mouse Up Click".

The touch screen interface to the PC is RS-232, so the recommend maximum distance from the PC is 50 feet., The driver and and interface have been tested to 50 Ft. using high quality cables. High quaility cables and connectors are important, especially if field connections are made. Poor quality cables will drastically reduce the performance of the RS-232 interface. The touch driver default baud rate is 9600.

Touch Screen Setup and Configuration:

If the unit does not have a touch screen, your configuration is complete. If your display is fitted with the optional touch screen interface, the following section will outline installation and set up. This system requires no special software knowledge, and can be installed and set up in minutes. The following section gives a detailed explanation of the software setup and configuration

VICPAS
HMI Parts Center

Touch Screen Driver Installation for *Windows 98*

Required items to **know** or **have** to install the Touch Driver.

- What Operating System you are using. **Windows 98**
- What Serial Port you are connected to. **Usually COM 1 or COM 2**
- The type of touch screen. **Smartset**
- The CD-ROM or Floppy disk included with the system.

Touch Screen Driver Installation for Windows 98

- Insert the provided CD
- Select Link to the Windows 98 driver
- Select **Open** from the Windows dialog box.
- Select **SmartSet** Controller for Com1 or Com2
- Remove the CD.
- Restart the computer; you will be prompted to calibrate the touch screen.
- Touch each of the 3 targets as directed. If the unit does not respond to your calibration touches then you have probably selected the wrong COM port. If so, reinstall the driver and selecting the correct COM port.
- You are now ready to use your touch screen.

Note 1: The touch screen calibration information is maintained in the computer. If you change computers, you will need to reinstall the touch screen driver software and recalibrate.

Note 2: If for any reason the touch screen performance is unsatisfactory, you can recalibrate at any time. This is done from the ELO icon under the Windows control panel

VICPAS
HMI Parts Center

Touch Screen Driver Installation for *Windows NT 4.0*

Required items to **know** or **have** to install the Touch Driver.

- What Operating System you are using. **Windows NT 4.0**
- What Serial Port you are connected to. **Usually COM 1 or COM 2**
- The type of touch screen. **Smartset**
- The CD-ROM or Floppy disk included with the system.

Touch Screen Driver Installation for Windows NT 4.0

- Insert the provided CD
- Select Link to the Windows NT driver
- Select **Open** from the Windows dialog box.
- Select **Next**
- Select **Yes** - To the license agreement
- Select **Next** - To the default installation folder
- Select **Next** - For Single Monitor installation
- Select the Com Port to which the touch interface is connected and **Next**
- Select **Finish**
- Remove the CD.
- Restart the computer. You will be prompted to calibrate the touch screen.
- Touch each of the 3 targets as directed. If the unit does not respond to your calibration touches then you have probably selected the wrong COM port. If so, press the Esc key on the keyboard to exit.
- Go to the ELO icon under Windows Control Panel.
- Select the correct Com Port, and Restart the computer.
- If this fails, reinstall the driver and select the correct COM port
- Once restarted, select the ELO icon under Windows Control Panel
- Select **Calibrate**, and then touch each of the 3 targets as they are displayed.
- You are now ready to use your touch screen.

Note 1: The touch screen calibration information is maintained in the computer. If you change computers, you will need to reinstall the touch screen driver software and recalibrate.

Note 2: If for any reason the touch screen performance is unsatisfactory, you can recalibrate at any time. This is done from the ELO icon under the Windows control panel

VICPAS
HMI Parts Center

Touch Screen Driver Installation for *Windows 2000*

Required items to **know** or **have** to install the Touch Driver.

- What Operating System you are using. **Windows 2000**
- What Serial Port you are connected to. **Usually COM 1 or COM 2**
- The type of touch screen. **Smartset**
- The CD-ROM or Floppy disk included with the system.

Touch Screen Driver Installation for Windows 2000

- Insert the provided CD
- Select Link to Windows 2000 driver
- Select **Open** from the Windows dialog box.
- Select **Next**
- Select **Yes** - To the license agreement
- Select the Com Port to which the touch interface is connected and Next
- Select **Next,** the driver will now start to install.
- Select **YES** - To continue
- Select **Finish**
- Remove the CD.
- Select **YES** to Restart.
- When the system restarts touch each of the 3 targets as directed.
- If the unit does not respond to your calibration touches then you have probably selected the wrong COM port. If so, press the Esc key to exit.
- Go to the ELO icon under Windows Control Panel.
- Select the correct Com port, and restart the computer.
- Once restarted, select the ELO icon under Windows Control Panel
- Select **Align and Calibrate**; then touch each of the 3 targets as directed.
- You are now ready to use your touch screen.

Note 1: The touch screen calibration information is maintained in the computer. If you change computers, you will need to reinstall the touch screen driver software and recalibrate.

Note 2: If for any reason the touch screen performance is unsatisfactory, you can recalibrate at any time. This is done from the ELO icon under the Windows control panel

VICPAS
HMI Parts Center

Touch Screen Driver Installation for *Windows XP*

Required items to **know** or **have** to install the Touch Driver.

- What Operating System you are using. **Windows XP**
- What Serial Port you are connected to. **Usually COM 1 or COM 2**
- The type of touch screen. **Smartset**
- The CD-ROM or Floppy disk included with the system.

Touch Screen Driver Installation for Windows XP

- Insert the provided CD
- Select Link to XP driver
- Select **Open** from the Windows dialog box.
- Select Yes - To the license agreement
- Select the Com Port to which the touch interface is connected and Next
- Select **Next,** the driver will now start to install.
- Select **YES** - To continue
- Select **Finish**
- Remove the CD
- Select **YES** to Restart
- Go to the ELO icon under Windows Control Panel.
- Verify the Com Port is correct
- Select **Align**; then touch each of the 3 targets as directed.
- If the unit does not respond to your calibration touches then you have probably selected the wrong COM port. If so, press the Esc key to exit.
- Select the correct Com port, and restart the computer, then align the touchscreen.
- You are now ready to use your touch screen.

Note 1: The touch screen calibration information is maintained in the computer. If you change computers, you will need to reinstall the touch screen driver software and recalibrate.

Note 2: If for any reason the touch screen performance is unsatisfactory, you can recalibrate at any time. This is done from the ELO icon under the Windows control panel

5 Section Mounting Instructions

Panel Mounting Procedure

1. Cut and drill the panel (refer to Figure 2; Panel Mount Drawing Appendix D). Measurements are in inches. A template of the hole pattern has been supplied with your monitor to assist in making the mounting holes accurately. Also, there is an AutoCad .dxf file included on the provided CD. This computer file can be used in a design drawing or forwarded to your panel fabricator for the proper mounting

2. If access to the side of the monitor is not available following installation, attach the power and video cables to the side of the monitor at this time.
3. Install the monitor in the prepared cutout.
4. Install the washers and lock nuts supplied with the monitor.
   Note: Use #10-32 nuts for mounting.
5. Tighten all mounting nuts evenly to a torque of 24 inch-pounds.

ATTENTION: Mounting nuts must be tightened to a torque of 24 inch-pounds to provide panel seal and avoid potential damage. AutomationDirect assumes no responsibility for water or chemical damage to the monitor or other equipment within the enclosure due to improper installation.

6. Attach the power, video and touch screen cables (if this is a –TS unit) to the side of the monitor.

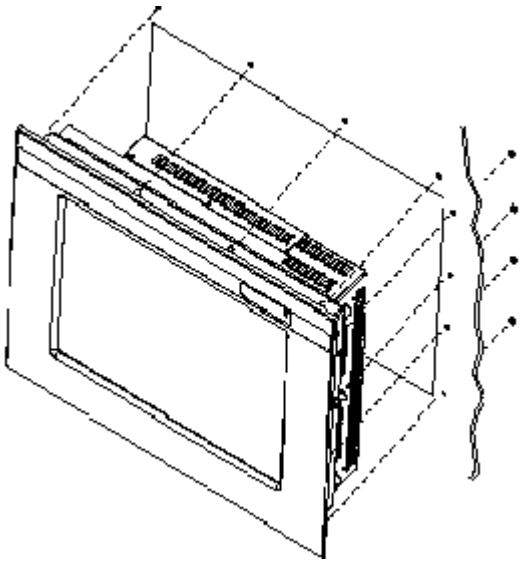

Figure 2: Panel Mount Drawing

VICPAS
HMI Parts Center

6 Section Troubleshooting Tips

No Picture	Check that the signal cable is properly connected to the display. Try disconnecting the video cable from the display and connecting to another display if available to confirm the presence of proper video. Make sure power is connected to a proper DC source and that the AC supply to the DC source is ON. Make sure the resolution mode is supported by the display and check display settings of the PC Confirm that the video cable is not defective.

Image Persistence	Image persistence occurs when a ghost of an image remains on the screen after the screen image has been changed. Unlike a CRT monitor, an LCD monitor's image persistence is not permanent. To erase an image ghost, turn the monitor off for several hours. What happens is the the liquid crystals after extened periods of operation with take a "set". To avoid this condition, install a screen saver progam on the computer

Picture Quality & Image Stability	Check for proper video cable for proper grounding and shielding. Check the signal source for proper signal. Check for proper adjustment of the Phase and Frequency controls. Check for proper recommended signal timing.

VICPAS
HMI Parts Center

Green LED not lit	Check for proper power and power connections

Display image is not properly sized	Press the “Select” button to Auto Adjust the display Adjust the Vertical and Horizontal size controls via the OSD. (Reference setup adjustments) Ensure that a supported mode is selected on the display card or system being used. Consult the display card or system manual for proper video.

Image will not adjust	Video timing outside of range. Use the on-screen menu to adjust the Clock Setting. Make sure timing is within VESA standard.

Slight distortion in text or Graphics	Not working in native resolution.

Display is present but “bars” Appear or roll across screen	Ground loop problem between computer and display Interference from adjacent equipment.

Vertical shaded bars on Screen image	Horizontal size not properly adjusted. Adjust horizontal size

Image is not stable.	Monitor has incorrect or bad sync signals.. Check for proper video cable installation. Replace suspected faulty cable. Check to ensure that video source is within the display’s operating range.

VICPAS
HMI Parts Center

7 Cleaning & Maintenance

Section

Cleaning

CAUTION: SHUT OFF YOUR TOUCH SCREEN BEFORE CLEANING!!

IF YOUR DISPLAY IS A –TS MODEL, THAT IS A TOUCH SCREEN DISPLAY, THE SCREEN WILL BE ACTUATED BY CLEANING. PRESSING ON THE SCREEN WHILE CLEANING WILL BE SEEN AS A TOUCH TO THE SYSTEM WHICH COULD CREATE A POTENTIALLY DANGEROUS CONDITION!!

Occasionally clean the display panel and cabinet with a soft cloth dampened (not soaked) with a mild (non-abrasive) glass cleaner. Keep turning a fresh side of the cloth toward the screen surface to avoid scratching it with accumulated grit.

Note: The solvent should be applied only to the cloth, and not directly on the monitor screen.

Do not use paper products as they may scratch the surface. To minimize the risk of abrasion, allow the screen to air dry. Special care should be taken when cleaning a touch screen or polycarbonate shield that is installed over the screen. Abrasive and certain chemical cleaners can damage the surface.

Never use alcoholic or ammoniac cleaners to clean the polycarbonate shield or a touch screen.

Replacing a Line Cord

To avoid shock and fire hazards, the monitor's power cord should be replaced if the insulation becomes broken or if it develops a loose internal connection.

Other Maintenance

Qualified service personnel should perform all maintenance, except for the power cord replacement described above.

VICPAS
HMI Parts Center

8 Appendices

Section

Appendix A – Video Pin Assignments

Pin assignments for the HD15 video connector

Pin 1	Red Video	Pin 9	No Connection
Pin 2	Green Video	Pin 10	Sync Ground
Pin 3	Blue Video	Pin 11	Not Used
Pin 4	Not Used	Pin 12	Bi-Directional Data
Pin 5	Return	Pin 13	Horizontal Sync
Pin 6	Red Video Ground	Pin 14	Vertical Sync
Pin 7	Green Video Ground	Pin 15	Data Clock (SCL)
Pin 8	Blue Video Ground		

Appendix B – RS-232 Pin Assignments

Pin assignment for 9 Pin Optional Touch Screen Connector

Pin 1	DCD	Data Carrier Detect
Pin 2	RD (Rx)	Receive Data
Pin 3	SD (Tx)	Transmit Data
Pin 4	DTR	Data Terminal Ready
Pin 5	SG	Signal Ground
Pin 6	DSR	Data Set Ready
Pin 7	RTS	Request to Send
Pin 8	CTS	Clear to Send
Pin 9	NC	No Connection

VICPAS
HMI Parts Center

Appendix C –General Specifications

FLI-150 & FLI-150-TS

Active Screen Area	11.97" x 8.98"
Brightness	250
Contrast	300:1
Lamp Life	35K
Screen Resolutions	VGA-SXGA
Native Resolution (Best Picture)	XGA
View Angle L / R	70/70
View Angle Up / Dn	55/65
Voltage	12 VDC
Current Draw	2.0a / 12 VDC
Input power	25W
Installed Depth	1.75"
Chassis Construction	16 Ga Steel
Bezel Construction	Steel
Bezel OD	16.21" x 13.22"
Bezel Finish	Gray & Black
Auto Adjust	Yes, On Power Up
5 Wire Touch	Yes
Recessed Cable Exit	Yes
Video Interface	VGA (HD-15F)
Colors	24bit (16M)
Operating Temp	0-50
Storage Temp	0-60
Storage Humidity	10-95
NEMA Front End	4/12

VICPAS
HMI Parts Center

Appendix D – Mounting Dimentions

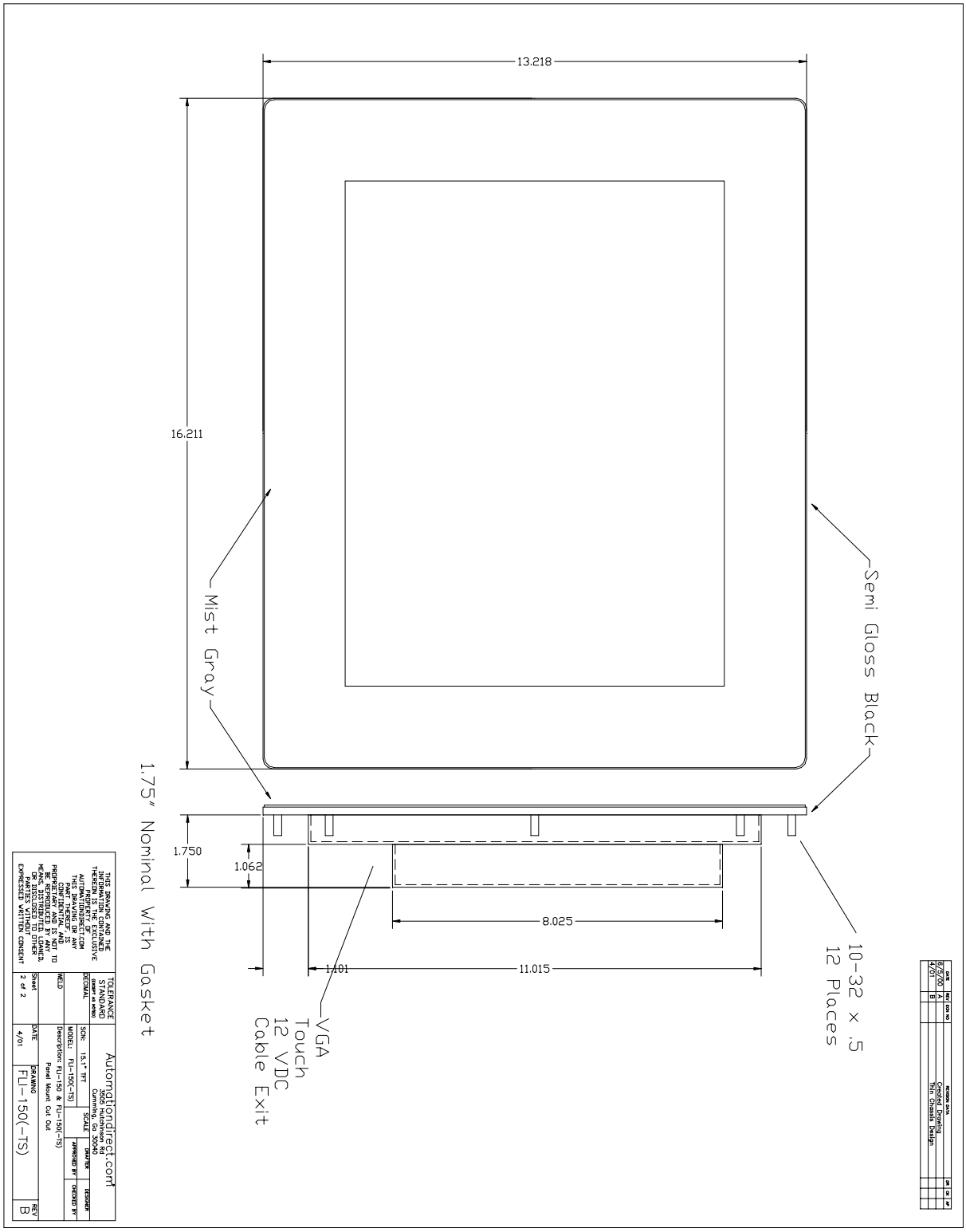

DATE	REV	ECN NO	REVISION DATA	DR	CK	AP
6/5/00	A		Created Drawing			
4/01	B		Thin Chassis Design			

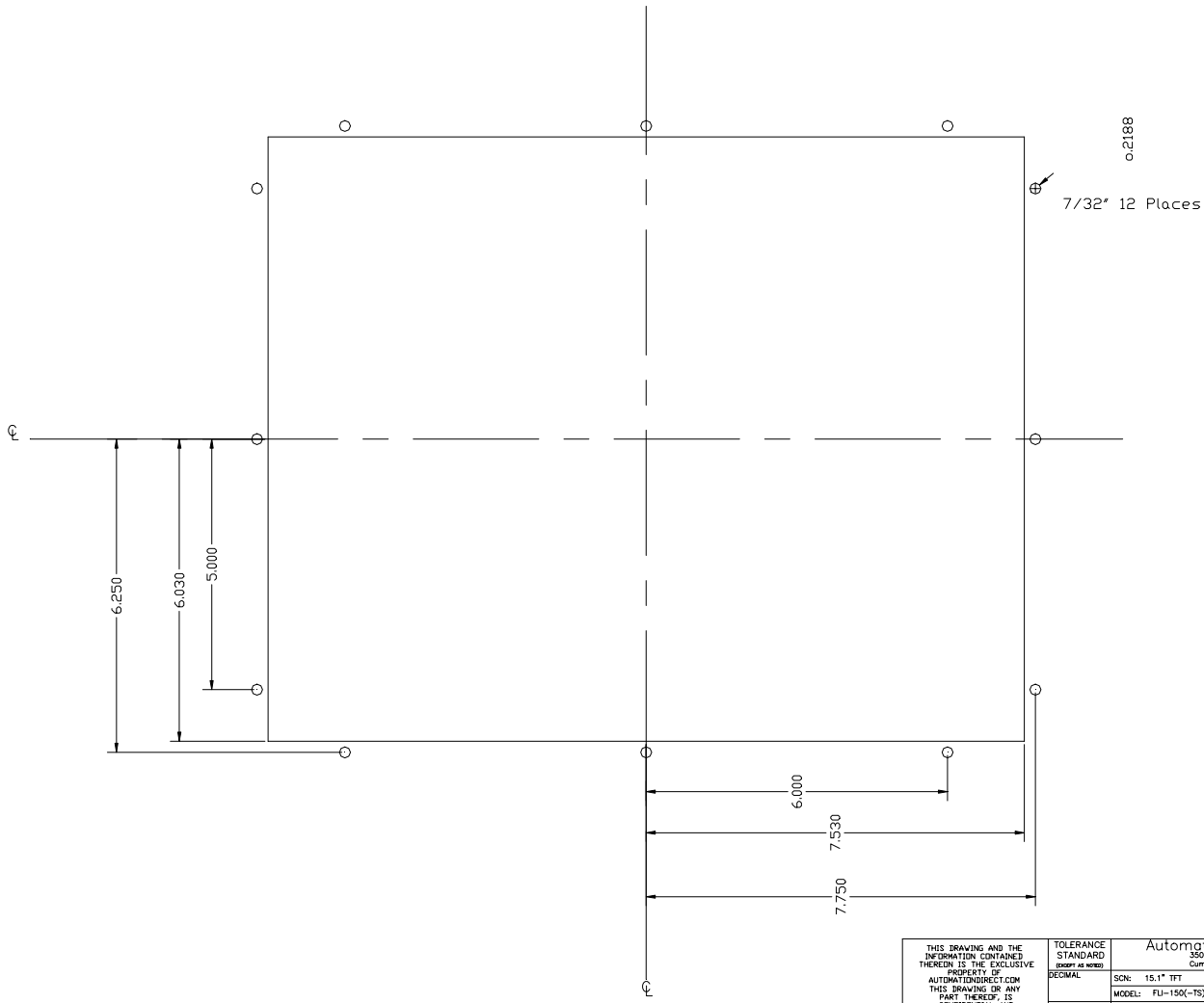

THIS DRAWING AND THE INFORMATION CONTAINED THEREON IS THE EXCLUSIVE PROPERTY OF AUTOMATIONDIRECT.COM THIS DRAWING OR ANY PART THEREOF, IS CONFIDENTIAL AND PROPRIETARY AND IS NOT TO BE REPRODUCED BY ANY MEANS, DISTRIBUTED, LOANED, OR DISCLOSED TO OTHER PARTIES WITHOUT EXPRESSED WRITTEN CONSENT

TOLERANCE STANDARD (EXCEPT AS NOTED)	Automationdirect.com 3505 Hutchinson Rd Cumming, Ga 30040			
DECIMAL	SCN: 15.1" TFT	SCALE	DRAFTER	DESIGNER
	MODEL: FLI-150(-TS)		APPROVED BY	CHECKED BY
WELD	Description: FLI-150 & FLI-150(-TS) Panel Mount Cut Out			
Sheet 1 of 2	DATE 4/01	DRAWING FLI-150-TEMPLET		REV B

VICPAS HMI Parts Center

NOTES

Model Number: _____

Serial Number: _____

FLI-180
FLI-180-TS

LCD Monitor User Guide

Revised 12/02

VICPAS
HMI Parts Center

FLI-180 & FLI-180-TS

Table Of Contents

Section 1 Introduction
About LCD Monitors
Product Safety Precautions

Section 2 Display Setup
Included Parts
Connecting Your Display

Section 3 Getting Started
Display Features
Getting Started
Adjusting the Display
Using the Auto-Adjust
OSD (On Screen Display) Adjustments

Section 4 Touch Screen Set up
Introduction to Touch Screens
Touch Screen Driver Installation
- Windows 98
- Windows NT 4.0
- Windows 2000
- Windows XP

Section 5 Mounting Instructions

Section 6 Trouble Shooting Tips

Section 7 Cleaning and Maintenance

Section 8 Appendices
A-VGA Pin Assignment
B-RS-232 Pin Assignment
C-General Specifications
D-Mounting Dimensions

VICPAS
HMI Parts Center

1 LCD Introduction

Section

About LCD Monitors

What you gain by using an LCD monitor for your industrial display is the future of display technology. CRTs although they have dropped in cost significantly, do not offer the performance, reliability, and mounting options available with LCDs. LCD monitors consist primarily of an LCD, video board and a backlight. The LCD determines to a large extent the viewing angle, brightness and contrast. Beyond that it is the function of the video board, which converts the analog RGB (Red, Green, Blue) signals from a standard video card to a high quality, digital RGB that the LCD can display.

LCD monitors can can be set for one or more of the following resolutions:

VGA: 640 x480
SVGA: 800x600
XGA 1024 x 768
SXGA 1280 x1024
UXGA 1600x 1200

Note: The VGA acronym stands for Video Graphics Adapter. It is used to describe both the most common type of display interface used by PC's and lowest resolution setting for this interface. Originally only the VGA [640x480] resolution was available on a VGA interface. Today all of the above interfaces are available on a VGA interface, but not all monitors support all resolutions. . The native resolution of the LCD is normally the maxium resolution that the LCD can display, and is the resolution that the LCD will exhibit the best display charastics Check the monitor specifications (Appendix C) for the resolutions supported by this monitor.

Recently the video card has taken on a new role. It is the responsibility of this device to "scale" a particular video resolution to the "native" resolution of the LCD. This enables a computer set to output a VGA [640x480] resolution signal to be properly displayed on an XGA [1024x768] LCD screen. Without the scaling engine, the displayed picture would be in the center $^1/_3$ of the LCD. The scaling engine mathematically converts the 640x480 to 1024x768. This my sound simple but it is in fact a complex algorithm that adjusts for different aspect ratios and pixel alignment, essentially smoothing text and graphics to produce a picture that is pleasant to the eye.

All Automationdirect.com displays from 12.1" (800x600) to 18.1" (1280x1024) incorporate scaling engines in the converter card.

VICPAS
HMI Parts Center

Safety Precautions

CAUTION: SHUT OFF YOUR TOUCH SCREEN BEFORE CLEANING!!

IF YOUR DISPLAY IS A –TS MODEL, THAT IS A TOUCH SCREEN DISPLAY, THE SCREEN WILL BE ACTUATED BY CLEANING. PRESSING ON THE SCREEN WHILE CLEANING WILL BE SEEN AS A TOUCH TO THE SYSTEM WHICH COULD CREATE A POTENTIALLY DANGEROUS CONDITION!!

- Do not attempt to service this display yourself. The rear chassis has a seal so that non qualified personal will not expose themselves to dangerous voltages or other risks.
- To protect from electrical shock, unplug the display power supply from the wall before moving.
- Do not use this display near water
- Do not place any heavy objects on the power cords. Damage may cause electrical shock.
- Unplug the power supply from the wall or unit if one of the following conditions exists.
  - Power cord or plug is damaged or frayed
  - Liquid is spilled into the display or the display is exposed to rain or water.
  - The display does not operate normally when the operating instructions are followed.
  - The display has been dropped or the enclosure has been damaged.
  - The display exhibits a distinct change in performance, indicating a need for service.
- Ensure that sufficient space is available around the display to provide air circulation for cooling.
- Ensure that the ambient air temperature will not exceed the specified maximum temperature.
- Do not expose the display to direct sunlight or heat.

2 Section Display Setup

Included Parts

Your LCD monitor package will consist of the primary components listed below.

Open shipping container and lay all components on a flat clean surface.

- FLI-180(-TS) LCD Monitor
- 6 ft Video Cable
- 6 Ft DC Power Cable
- 6 ft RS232 Touch Interface Cable (touch screen units only)
- 10-32 Mounting Hardware. (For use with Panel Mount)
- Documentation and Driver CD ROM

Connecting Your Display

1. Connect all cables to the computer first. This includes the VGA cable, and if the unit has a touch screen, the RS 232 serial touch screen connection.
2. After connecting the cables between the LCD monitor and the computer, connect DC power (External power supply such AutomationDirect's PS-MON is required). Turn on the power, the FLI series monitors Trun on the power.
4. If your computer is off, turn on your computer.
5. Your display should now operate as a normal computer display, displaying the computers BIOS screens and booting into Windows or other operating system.

Note: If for any reason the display goes blank and/or displays "out of Range" or "No Input Signal" message on the screen, your computer or video source may be putting out a signal that is incompatible with the FLI-180(-TS). If this happens, reboot the computer with the previous display and adjust the display settings to be within the FLI-180(-TS) specifications (see Appendix C). Below is are the most common reasons a display may not operate correctly:

1. The resolution is to high or low for the LCD.
2. The refresh rate is set to high. Refresh on an LCD is different than a CRT. Set the refresh to 60Hz. CRT's need a high refresh rate to avoid flicker. The refresh rate has no impact on an LCD.
3. The power source is incorrect, or there is no power. Check if the rear LED is ON or blinking. If the LED is not lit, check to be sure there is power to the unit.
4. The unit is malfunctioning. If you believe this to be true, disconnect the video cable from the rear of the LCD and connect to a known good display. If the computer display is working satisfactory and the video is within the appropriate range, then contact AutomationDirect.com technical support.

VICPAS
HMI Parts Center

3 Getting Started

Section

Display Features

- The FLI-180(-TS) is capable of displaying 16M (24 Bit) colors in a continuous spectrum. The high contrast LCD enhances the image with no geometric distortion.
- FLI-180(-TS) Series directly accepts an analog 5 wire RGB with separate H/V (Horizontal / Vertical) sync. This is the standard PC video signal.The FLI-180(-TS) Series is auto synchronous adjusting the display to the appropriate input between VGA and SXGA.
- The FLI-180(-TS) Series is supplied with a Anti-Glare Touch Screeen [TS models] or an Anti-Glare impact window on non touch screen models.
- Requires an external 12 VDC power supply such AutomationDirect's PS-MON is required. Turn on the power.

Adjusting the Display

The FLI-180 (-TS) Series display has an embedded microprocessor in the converter card [this is the electronics that drives the LCD]. In most cases the unit will require very little if any user intervention to operate correctly. That is, produce a sharp stable picture.

The micoprocessor in the display has the capability to adjust itself to the computer to which it is attached. If the picture is not satisfactory, the first step is to allow the unit to attempt to adjust itself to your computer.

Located on the rear of the unit is a membrane keypad used for adjusting the display. See figure 1 below:

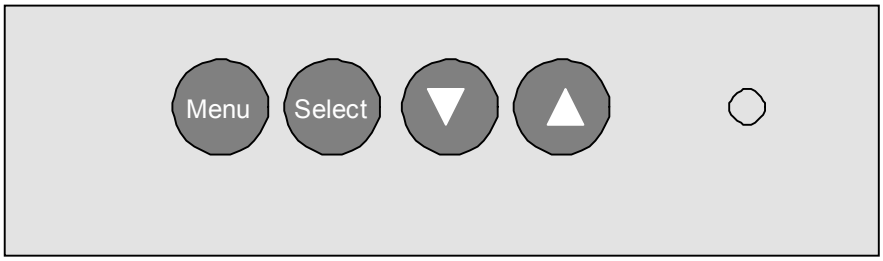

Figure 1

VICPAS
HMI Parts Center

Using the Auto-Adjust

Once you have the unit displaying the resolution you desire for your application do the following:

Press and release the “Select” button on the membrane. This will place the unit into a “Geometry Auto Adjust” mode. This operation will adjust the picture so it is centered both vertically and horizontally on the LCD screen. It will also make the necessary adjustments to the internal clock timing so that the picture is stable (without any decernable pixel jitter).

After having completed this step you may wish to adjust the color balance. This procedure adjusts for any imbalance in the Red, Green, and Blue levels from the video cable or video card. This is accomplished using the LCDs OSD (On Screen Menu) system.

OSD (On Screen Display) Adjustments

There are four membrane buttons (see Fig 1, above) located on the rear of the unit. They will activate the OSD and allow navigation to all adjustments if your unit requires adjustment.

OSD Layout

Main Menu	Component Being Adjusted
Automatic Adjust	Geometry & Color Balance
Horizontal Position	Horizontal position
Vertical Position	Vertical Position
Horizontal Size	Horizontal Size
Phase	Phase
Brightness	Brightness
Contrast	Contrast
Color	Red, Green, Blue Levels
OSD Language	English, Espanol, Deutsch, Francais, Italiano
Advanced	Factory Preset, OSD Hor. Pos., OSD Vert. POS.
Cancel	

All adjustment follows the basic adjustment procedure outlined below. If during adjustment you encounter difficulity. Exit the Menu system by pressing the Menu button and press the Select to Auto Adjust the unit.

To adjust the Auto Color Balance:

1. Press the **Menu** button.
2. Press **Select** to Highlight this Sub Menu
3. Press the ▼ to highlight Auto Color Balance.
4. Press the **Select** button.

The unit will test your video color balance and adjust it accordingly. When complete press **Menu** to Exit the OSD Menu system

When you press the “**Menu**” the new settings are saved and your setting will be stored in the unit’s non-volatile memory.

VICPAS
HMI Parts Center

Following are complete instructions on how to adjust each individual function on the OSD menu:

Automatic Adjustment

Press **Menu** and the automatic adjustment will be the first item to appear on the OSD.
Hit **Select** and then press the **Up/Down** button to navigate to Geometry.
Press **Select** again and the display will automatically adjust the geometry.
Press the **Up/Down** button to **Color Balance.**
Hit **Select** again and the display will automatically preset the color balance to a factory preset value.

Horizontal Position

Press **Menu**. Press the **Up** button to the second icon which is **Horz. Pos**
Hit **Select** and then press the **Up/Down** button to achieve the desired position. The desired value will be graphically illustrated along with a digital value.
When complete press **Select** and you are ready to move to the next adjustment.

Vertical Position

Press **Menu**. Press the **Up** button to the third icon which is **Vertical Position.**
Hit **Select** and then press the **Up/Down** button to achieve the desired position. The desired value will be graphically illustrated along with a digital value.
When complete press **Select** and you are ready to move to the next adjustment.

Horizontal Size

Press **Menu**. Press the **Up** button to the fourth icon which is **Horizontal Size.**
Hit **Select** and then press the **Up/Down** button to achieve the desired size. The desired value will be graphically illustrated along with a digital value.
When complete press **Select** and you are ready to move to the next adjustment.

Phase

Press **Menu**. Press the **Up** button to the fifth icon which is **Phase.**
Hit **Select** and then press the **Up/Down** button to achieve the desired phase.
The phase should be adjusted until the screen image is sharp and there is no
When complete press **Select** and you are ready to move to the next adjustment.

Brightness

Press **Menu**. Press the **Up** button to the sixth icon which is **Brightness.** Hit **Select** and then press the **Up/Down** button to achieve the desired brightness level. The desired value will be graphically illustrated along with a digital value.
When complete press **Select** and you are ready to move to the next adjustment.

Contrast

Press **Menu**. Press the **Up** button to the seventh icon which is **Contrast.**
Hit **Select** and then press the **Up/Down** button to achieve the desired contrast level. The desired value will be graphically illustrated along with a digital value.
When complete press **Select** and you are ready to move to the next adjustment.

Color

Color temperature adjustments allows the user to adjust for desired white balance. This can be achieved by adjusting the **Color Temperature** control or adjusting the individual **Red, Green or Blue** controls.
Press **Menu**. Press the **Up** button to the eight icon which is **Color .**

VICPAS
HMI Parts Center

Hit **Select** and then press the **Up/Down** button to select the **Color Temperature**. Hit **Select** again and adjust the **Up/Down** button and adjust to one of the desired six digital values. The six digital values are graphically illustrated.
When complete press **Select** and you are ready to move to the next adjustment.

If your require a unique white balance, you can adjust the individual colors to achieve this value by proceeding with the following adjustments.

Advanced Settings

Red

Press **Menu**. Press the **Up** button to the eight icon which is **Color.**
Hit **Select** and then press the **Up/Down** button to select **Red**.
Hit **Select** again and adjust the red value which is graphically illustrated along with a digital value.
When complete press **Select** and you are ready to move to the next adjustment.

Blue

Press **Menu**. Press the **Up** button to the eight icon which is **Color**.
Hit **Select** and then press the **Up/Down** button to select **Blue**.
Hit **Select** again and adjust the blue value which is graphically illustrated along with a digital value.
When complete press **Select** and you are ready to move to the next adjustment.

Green

Press **Menu**. Press the Up button to the eight icon which is **Color**.
Hit **Select** and then press the **Up/Down** button to select **Green**.
Hit **Select** again and adjust the green value which is graphically illustrated along with a digital value.
When complete press **Select** and you are ready to move to the next adjustment.

Optional Settings

OSD Language

This function allows you to convert from English to the following languages. Espanol, Deutsch, Francais, Italiano. If you desire one of these languages, proceed to adjust as follows. Espanol will be used as an example.

Espanol

Press **Menu**. Press the **Up** button to the ninth icon which is **OSD Language.**
Hit **Select** and then press the **Up/Down** button to select **Espanol**.
Hit **Select** again and the display will convert all text to Espanol.
When complete press **Select** and you are ready to move to the next adjustment

VICPAS
HMI Parts Center

4 Touch Screen Setup

Section

Introduction to Touch Screens

Touch screen interfaces have become the standard interface in the past 5 years. They are, rugged, reliable, extremely flexible and easier than ever to implement! The universal acceptance of the Windows GUI [Graphical User Interface] along with the extensive use of a mouse interface has significantly accelerated the use of a touch interface. Basically think of your touch screen as if it were a mouse.

AutomationDirect.com touch systems are mouse emulators. By installing a software driver and connecting to a serial port, the touch screen will support all the primary mouse functions:

The FLI-180(-TS) touch screen interface, is a high resolution, analog resistive. Following is a quick explanation of what all this means.

High Resolution: The touch screen resolution is 400 ppi [points per inch]

Analog Resistive: The actual touch glass is an analog device. Meaning there is a very low voltage applied to the X and Y axis of the touch screen. This current is applied to ITO [Iridium Tin Oxide] that is sputtered onto a polyester membrane. When you touch the screen you are changing the resistance on both the X and Y axis, producing an analog value that references a particular location.
This type of screen can be activated with a gloved finger or mechanical stylus.

The touch screen itself is connected to electronics [internal to the display unit] that provide the Analog to Digital conversion. When the screen is touched, the electronics convert the analog voltage to a digital value and add a "Mouse Click". This touch data is sent out from the display serial port to the PC serial port where the touch driver presents the data to the operating systems as if it were from a normal PC mouse. When the touch is released the new XY location is sent along with a "Mouse Up Click".

The touch screen interface to the PC is RS-232, so the recommend maximum distance from the PC is 50 feet., The driver and and interface have been tested to 50 Ft. using high quality cables. High quaility cables and connectors are important, especially if field connections are made. Poor quality cables will drastically reduce the performance of the RS-232 interface. The touch driver default baud rate is 9600.

Touch Screen Setup and Configuration:

If the unit does not have a touch screen, your configuration is complete. If your display is fitted with the optional touch screen interface, the following section will outline installation and set up. This system requires no special software knowledge, and can be installed and set up in minutes. The following section gives a detailed explanation of the software setup and configuration

VICPAS
HMI Parts Center

Touch Screen Driver Installation for *Windows 98*

Required items to **know** or **have** to install the Touch Driver.

- What Operating System you are using. **Windows 98**
- What Serial Port you are connected to. **Usually COM 1 or COM 2**
- The type of touch screen. **Smartset**
- The CD-ROM or Floppy disk included with the system.

Touch Screen Driver Installation for Windows 98

- Insert the provided CD
- Select Link to the Windows 98 driver
- Select **Open** from the Windows dialog box.
- Select **SmartSet** Controller for Com1 or Com2
- Remove the CD.
- Restart the computer; you will be prompted to calibrate the touch screen.
- Touch each of the 3 targets as directed. If the unit does not respond to your calibration touches then you have probably selected the wrong COM port. If so, reinstall the driver and selecting the correct COM port.
- You are now ready to use your touch screen.

Note 1: The touch screen calibration information is maintained in the computer. If you change computers, you will need to reinstall the touch screen driver software and recalibrate.

Note 2: If for any reason the touch screen performance is unsatisfactory, you can recalibrate at any time. This is done from the ELO icon under the Windows control panel

VICPAS
HMI Parts Center

Touch Screen Driver Installation for *Windows NT 4.0*

Required items to **know** or **have** to install the Touch Driver.

- What Operating System you are using. **Windows NT 4.0**
- What Serial Port you are connected to. **Usually COM 1 or COM 2**
- The type of touch screen. **Smartset**
- The CD-ROM or Floppy disk included with the system.

Touch Screen Driver Installation for Windows NT 4.0

- Insert the provided CD
- Select Link to the Windows NT driver
- Select **Open** from the Windows dialog box.
- Select **Next**
- Select **Yes** - To the license agreement
- Select **Next** - To the default installation folder
- Select **Next** - For Single Monitor installation
- Select the Com Port to which the touch interface is connected and **Next**
- Select **Finish**
- Remove the CD.
- Restart the computer. You will be prompted to calibrate the touch screen.
- Touch each of the 3 targets as directed. If the unit does not respond to your calibration touches then you have probably selected the wrong COM port. If so, press the Esc key on the keyboard to exit.
- Go to the ELO icon under Windows Control Panel.
- Select the correct Com Port, and Restart the computer.
- If this fails, reinstall the driver and select the correct COM port
- Once restarted, select the ELO icon under Windows Control Panel
- Select **Calibrate**, and then touch each of the 3 targets as they are displayed.
- You are now ready to use your touch screen.

Note 1: The touch screen calibration information is maintained in the computer. If you change computers, you will need to reinstall the touch screen driver software and recalibrate.

Note 2: If for any reason the touch screen performance is unsatisfactory, you can recalibrate at any time. This is done from the ELO icon under the Windows control panel

VICPAS
HMI Parts Center

Touch Screen Driver Installation for *Windows 2000*

Required items to **know** or **have** to install the Touch Driver.

- What Operating System you are using. **Windows 2000**
- What Serial Port you are connected to. **Usually COM 1 or COM 2**
- The type of touch screen. **Smartset**
- The CD-ROM or Floppy disk included with the system.

Touch Screen Driver Installation for Windows 2000

- Insert the provided CD
- Select Link to Windows 2000 driver
- Select **Open** from the Windows dialog box.
- Select **Next**
- Select **Yes** - To the license agreement
- Select the Com Port to which the touch interface is connected and Next
- Select **Next,** the driver will now start to install.
- Select **YES** - To continue
- Select **Finish**
- Remove the CD.
- Select **YES** to Restart.
- When the system restarts touch each of the 3 targets as directed.
- If the unit does not respond to your calibration touches then you have probably selected the wrong COM port. If so, press the Esc key to exit.
- Go to the ELO icon under Windows Control Panel.
- Select the correct Com port, and restart the computer.
- Once restarted, select the ELO icon under Windows Control Panel
- Select **Align and Calibrate**; then touch each of the 3 targets as directed.
- You are now ready to use your touch screen.

Note 1: The touch screen calibration information is maintained in the computer. If you change computers, you will need to reinstall the touch screen driver software and recalibrate.

Note 2: If for any reason the touch screen performance is unsatisfactory, you can recalibrate at any time. This is done from the ELO icon under the Windows control panel

VICPAS
HMI Parts Center

Touch Screen Driver Installation for *Windows XP*

Required items to **know** or **have** to install the Touch Driver.

- What Operating System you are using. **Windows XP**
- What Serial Port you are connected to. **Usually COM 1 or COM 2**
- The type of touch screen. **Smartset**
- The CD-ROM or Floppy disk included with the system.

Touch Screen Driver Installation for Windows XP

- Insert the provided CD
- Select Link to XP driver
- Select **Open** from the Windows dialog box.
- Select Yes - To the license agreement
- Select the Com Port to which the touch interface is connected and Next
- Select **Next,** the driver will now start to install.
- Select **YES** - To continue
- Select **Finish**
- Remove the CD
- Select **YES** to Restart
- Go to the ELO icon under Windows Control Panel.
- Verify the Com Port is correct
- Select **Align**; then touch each of the 3 targets as directed.
- If the unit does not respond to your calibration touches then you have probably selected the wrong COM port. If so, press the Esc key to exit.
- Select the correct Com port, and restart the computer, then align the touchscreen.
- You are now ready to use your touch screen.

Note 1: The touch screen calibration information is maintained in the computer. If you change computers, you will need to reinstall the touch screen driver software and recalibrate.

Note 2: If for any reason the touch screen performance is unsatisfactory, you can recalibrate at any time. This is done from the ELO icon under the Windows control panel

5 Section Mounting Instructions

Panel Mounting Procedure

1. Cut and drill the panel (refer to Figure 2; Panel Mount Drawing Appendix D). Measurements are in inches. A template of the hole pattern has been supplied with your monitor to assist in making the mounting holes accurately. Also, there is an AutoCad .dxf file included on the provided CD. This computer file can be used in a design drawing or forwarded to your panel fabricator for the proper mounting

2. If access to the side of the monitor is not available following installation, attach the power and video cables to the side of the monitor at this time.
3. Install the monitor in the prepared cutout.
4. Install the washers and lock nuts supplied with the monitor.
   Note: Use #10-32 nuts for mounting.
5. Tighten all mounting nuts evenly to a torque of 24 inch-pounds.

ATTENTION: Mounting nuts must be tightened to a torque of 24 inch-pounds to provide panel seal and avoid potential damage. AutomationDirect assumes no responsibility for water or chemical damage to the monitor or other equipment within the enclosure due to improper installation.

6. Attach the power, video and touch screen cables (if this is a –TS unit) to the side of the monitor.

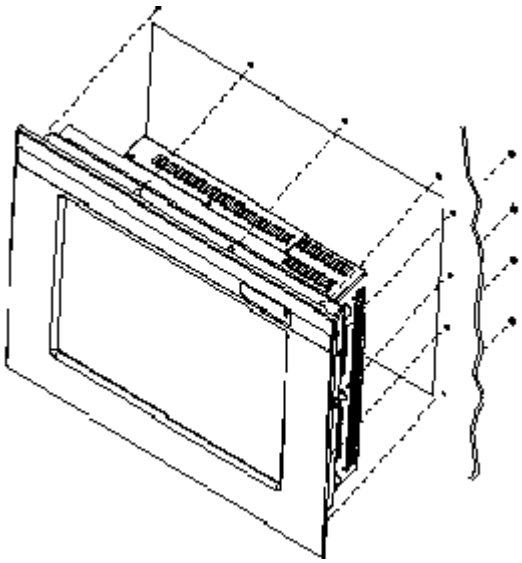

Figure 2: Panel Mount Drawing

VICPAS
HMI Parts Center

6 Section Troubleshooting Tips

No Picture	Check that the signal cable is properly connected to the display. Try disconnecting the video cable from the display and connecting to another display if available to confirm the presence of proper video. Make sure power is connected to a proper DC source and that the AC supply to the DC source is ON. Make sure the resolution mode is supported by the display and check display settings of the PC Confirm that the video cable is not defective.

Image Persistence	Image persistence occurs when a ghost of an image remains on the screen after the screen image has been changed. Unlike a CRT monitor, an LCD monitor's image persistence is not permanent. To erase an image ghost, turn the monitor off for several hours. What happens is the the liquid crystals after extened periods of operation with take a "set". To avoid this condition, install a screen saver progam l on the computer

Picture Quality & Image Stability	Check for proper video cable for proper grounding and shielding. Check the signal source for proper signal. Check for proper adjustment of the Phase and Frequency controls. Check for proper recommended signal timing.

VICPAS
HMI Parts Center

Green LED not lit	Check for proper power and power connections

Display image is not properly sized	Press the “Select” button to Auto Adjust the display Adjust the Vertical and Horizontal size controls via the OSD. (Reference setup adjustments) Ensure that a supported mode is selected on the display card or system being used. Consult the display card or system manual for proper video.

Image will not adjust	Video timing outside of range. Use the on-screen menu to adjust the Clock Setting. Make sure timing is within VESA standard.

Slight distortion in text or Graphics	Not working in native resolution.

Display is present but “bars” Appear or roll across screen	Ground loop problem between computer and display Interference from adjacent equipment.

Vertical shaded bars on Screen image	Horizontal size not properly adjusted. Adjust horizontal size

Image is not stable.	Monitor has incorrect or bad sync signals.. Check for proper video cable installation. Replace suspected faulty cable. Check to ensure that video source is within the display’s operating range.

VICPAS
HMI Parts Center

7 Cleaning & Maintenance

Section

Cleaning

CAUTION: SHUT OFF YOUR TOUCH SCREEN BEFORE CLEANING!!

IF YOUR DISPLAY IS A –TS MODEL, THAT IS A TOUCH SCREEN DISPLAY, THE SCREEN WILL BE ACTUATED BY CLEANING. PRESSING ON THE SCREEN WHILE CLEANING WILL BE SEEN AS A TOUCH TO THE SYSTEM WHICH COULD CREATE A POTENTIALLY DANGEROUS CONDITION!!

Occasionally clean the display panel and cabinet with a soft cloth dampened (not soaked) with a mild (non-abrasive) glass cleaner. Keep turning a fresh side of the cloth toward the screen surface to avoid scratching it with accumulated grit.

Note: The solvent should be applied only to the cloth, and not directly on the monitor screen.

Do not use paper products as they may scratch the surface. To minimize the risk of abrasion, allow the screen to air dry. Special care should be taken when cleaning a touch screen or polycarbonate shield that is installed over the screen. Abrasive and certain chemical cleaners can damage the surface.

Never use alcoholic or ammoniac cleaners to clean the polycarbonate shield or a touch screen.

Replacing a Line Cord

To avoid shock and fire hazards, the monitor's power cord should be replaced if the insulation becomes broken or if it develops a loose internal connection.

Other Maintenance

Qualified service personnel should perform all maintenance, except for the power cord replacement described above.

VICPAS
HMI Parts Center

8 Appendices

Section

Appendix A – Video Pin Assignments

Pin assignments for the HD15 video connector

Pin 1	Red Video	Pin 9	No Connection
Pin 2	Green Video	Pin 10	Sync Ground
Pin 3	Blue Video	Pin 11	Not Used
Pin 4	Not Used	Pin 12	Bi-Directional Data
Pin 5	Return	Pin 13	Horizontal Sync
Pin 6	Red Video Ground	Pin 14	Vertical Sync
Pin 7	Green Video Ground	Pin 15	Data Clock (SCL)
Pin 8	Blue Video Ground		

Appendix B – RS-232 Pin Assignments

Pin assignment for 9 Pin Optional Touch Screen Connector

Pin 1	DCD	Data Carrier Detect
Pin 2	RD (Rx)	Receive Data
Pin 3	SD (Tx)	Transmit Data
Pin 4	DTR	Data Terminal Ready
Pin 5	SG	Signal Ground
Pin 6	DSR	Data Set Ready
Pin 7	RTS	Request to Send
Pin 8	CTS	Clear to Send
Pin 9	NC	No Connection

VICPAS
HMI Parts Center

Appendix C –General Specifications

FLI-180 & FLI-180-TS

Active Screen Area	14.14" x 11.31"
Brightness	200
Contrast	300:1
Lamp Life	30K
Screen Resolutions	VGA-SXGA
Native Resolution (Best Picture)	SXGA
View Angle L / R	80 /80
View Angle Up / Dn	80 /80
Voltage	12 VDC
Current Draw	2.75 / 12 VDC
Input power	33W
Installed Depth	2.125”
Chassis Construction	16 Ga Steel
Bezel Construction	Steel
Bezel OD	19.0" x 15.72"
Bezel Finish	Gray & Black
Auto Adjust	Yes
5 Wire Touch	Yes
Recessed Cable Exit	Yes
Video Interface	VGA (HD-15F)
Colors	24bit (16M)
Op temp	0-50
Storage Temp	0-60
Storage Humidity	10-95
NEMA Front End	4/12

VICPAS
HMI Parts Center

Appendix D – Mounting Dimentions

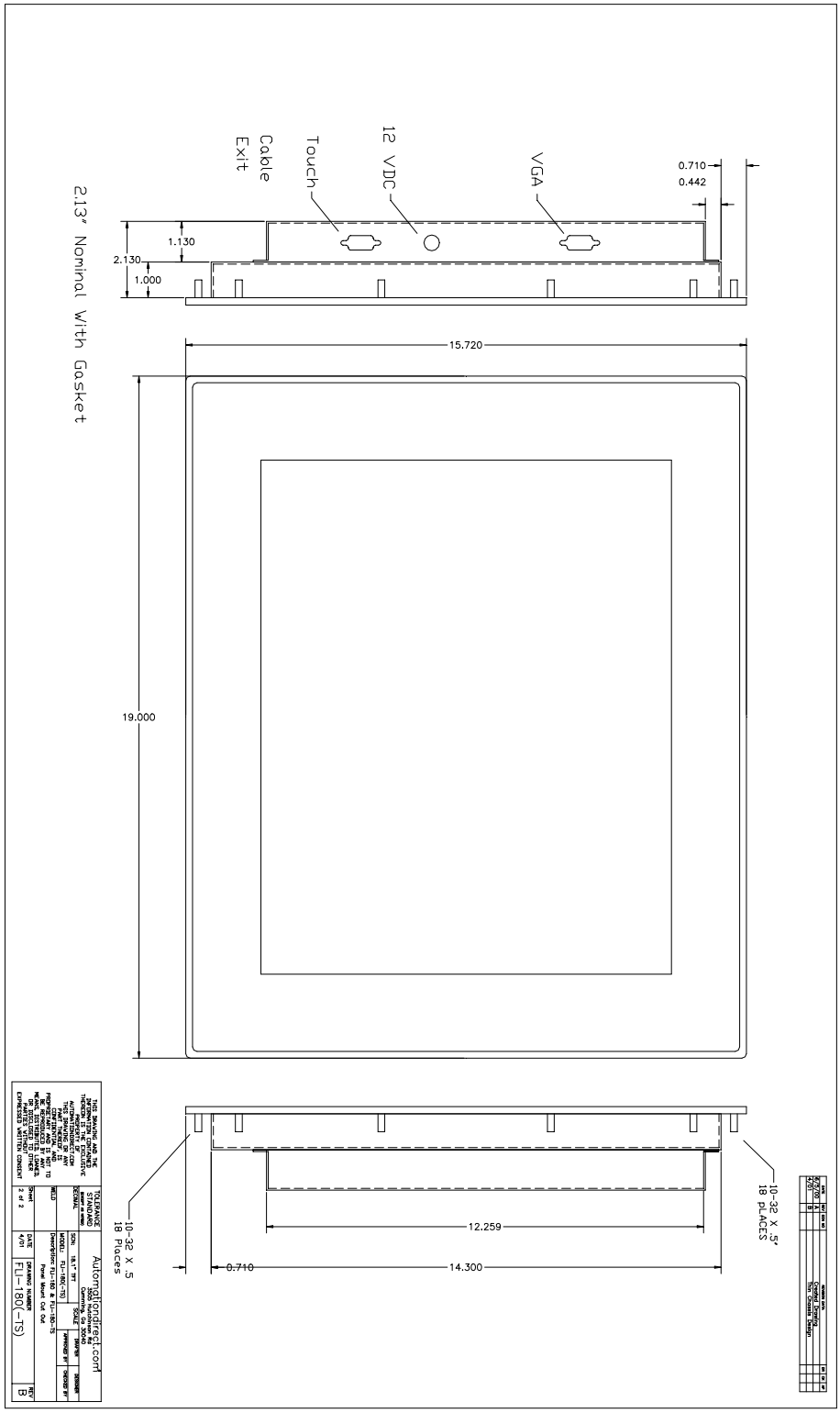

VICPAS
HMI Parts Center

DATE	REV	ECN NO	REVISION DATA	BR	CK	AP
6/5/00	A		Created Drawing			
4/01	B		Thin Chassis Design			

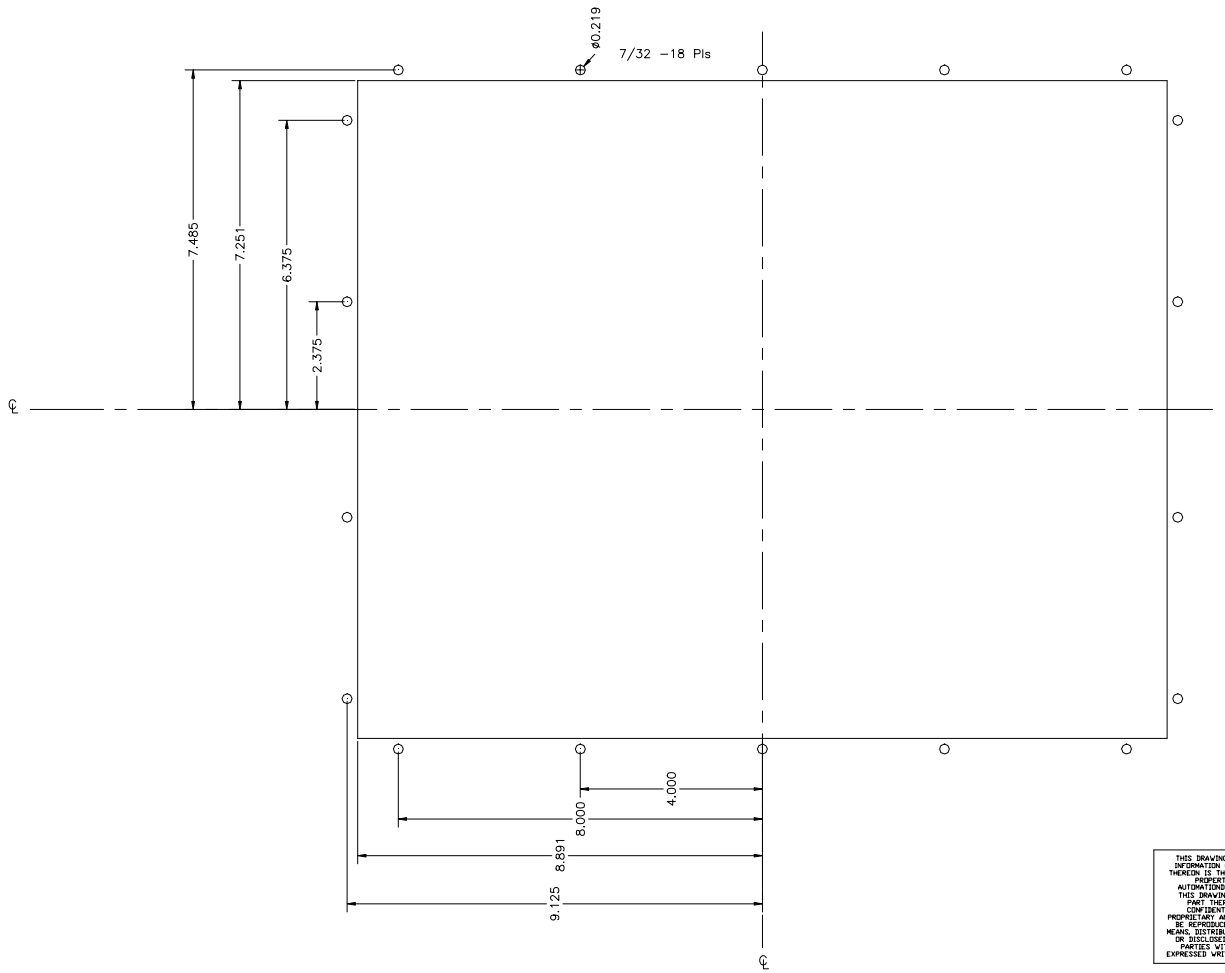

THIS DRAWING AND THE INFORMATION CONTAINED THEREON IS THE EXCLUSIVE PROPERTY OF AUTOMATIONDIRECT.COM THIS DRAWING OR ANY PART THEREOF, IS CONFIDENTIAL AND PROPRIETARY AND IS NOT TO BE REPRODUCED BY ANY MEANS, DISTRIBUTED, LOANED, OR DISCLOSED TO OTHER PARTIES WITHOUT EXPRESSED WRITTEN CONSENT

TOLERANCE STANDARD (EXCEPT AS NOTED)

DECIMAL

WELD

Sheet 1 of 2

Automationdirect.com
3505 Hutchinson Rd
Cumming, Ga 30040

SCALE | DRAFTER | DESIGNER | APPROVED BY | CHECKED BY

SCN: 18.1" TFT

MODEL: FLI-180(-TS)

Description: FLI-180 & FLI-180-TS
Panel Mount Cut Out

DATE 4/01

DRAWING NUMBER FLI-180-TEMPLET

REV B

VICPAS
HMI Parts Center

NOTES

Model Number: _____

Serial Number: _____

FPM-120
FPM-120-TS

LCD Monitor User Guide

Revised 12/02

VICPAS
HMI Parts Center

FPM-120 & FPM-120-TS

Table Of Contents

Section 1 Introduction
About LCD Monitors
Product Safety Precautions

Section 2 Display Setup
Included Parts
Connecting Your Display

Section 3 Getting Started
Display Features
Getting Started
Adjusting the Display
Using the Auto-Adjust
OSD (On Screen Display) Adjustments

Section 4 Touch Screen Set up
Introduction to Touch Screens
Touch Screen Driver Installation
- Windows 98
- Windows NT 4.0
- Windows 2000
- Windows XP

Section 5 Mounting Instructions

Section 6 Trouble Shooting Tips

Section 7 Cleaning and Maintenance

Section 8 Appendices
A-VGA Pin Assignment
B-RS-232 Pin Assignment
C-General Specifications
D-Mounting Dimensions

VICPAS
HMI Parts Center

1 LCD Introduction

Section

About LCD Monitors

What you gain by using an LCD monitor for your industrial display is the future of display technology. CRTs although they have dropped in cost significantly, do not offer the performance, reliability, and mounting options available with LCDs. LCD monitors consist primarily of an LCD, video board and a backlight. The LCD determines to a large extent the viewing angle, brightness and contrast. Beyond that it is the function of the video board, which converts the analog RGB (Red, Green, Blue) signals from a standard video card to a high quality, digital RGB that the LCD can display.

LCD monitors can can be set for one or more of the following resolutions:

VGA: 640 x480
SVGA: 800x600
XGA 1024 x 768
SXGA 1280 x1024
UXGA 1600x 1200

Note: The VGA acronym stands for Video Graphics Adapter. It is used to describe both the most common type of display interface used by PC's and lowest resolution setting for this interface. Originally only the VGA [640x480] resolution was available on a VGA interface. Today all of the above interfaces are available on a VGA interface, but not all monitors support all resolutions. . The native resolution of the LCD is normally the maxium resolution that the LCD can display, and is the resolution that the LCD will exhibit the best display charastics Check the monitor specifications (Appendix C) for the resolutions supported by this monitor.

Recently the video card has taken on a new role. It is the responsibility of this device to "scale" a particular video resolution to the "native" resolution of the LCD. This enables a computer set to output a VGA [640x480] resolution signal to be properly displayed on an XGA [1024x768] LCD screen. Without the scaling engine, the displayed picture would be in the center $^1/_3$ of the LCD. The scaling engine mathematically converts the 640x480 to 1024x768. This my sound simple but it is in fact a complex algorithm that adjusts for different aspect ratios and pixel alignment, essentially smoothing text and graphics to produce a picture that is pleasant to the eye.

All Automationdirect.com displays from 12.1" (800x600) to 18.1" (1280x1024) incorporate scaling engines in the converter card.

VICPAS
HMI Parts Center

Safety Precautions

CAUTION: SHUT OFF YOUR TOUCH SCREEN BEFORE CLEANING!!

IF YOUR DISPLAY IS A –TS MODEL, THAT IS A TOUCH SCREEN DISPLAY, THE SCREEN WILL BE ACTUATED BY CLEANING. PRESSING ON THE SCREEN WHILE CLEANING WILL BE SEEN AS A TOUCH TO THE SYSTEM WHICH COULD CREATE A POTENTIALLY DANGEROUS CONDITION!!

- Do not attempt to service this display yourself. The rear chassis has a seal so that non qualified personal will not expose themselves to dangerous voltages or other risks.

- To protect from electrical shock, unplug the display power supply from the wall before moving.

- Do not use this display near water

- Do not place any heavy objects on the power cords. Damage may cause electrical shock.

- Unplug the power supply from the wall or unit if one of the following conditions exists.
  - Power cord or plug is damaged or frayed
  - Liquid is spilled into the display or the display is exposed to rain or water.
  - The display does not operate normally when the operating instructions are followed.
  - The display has been dropped or the enclosure has been damaged.
  - The display exhibits a distinct change in performance, indicating a need for service.

- Ensure that sufficient space is available around the display to provide air circulation for cooling.

- Ensure that the ambient air temperature will not exceed the specified maximum temperature.

- Do not expose the display to direct sunlight or heat.

2 Section Display Setup

Included Parts

Your LCD monitor package will consist of the primary components listed below.

Open shipping container and lay all components on a flat clean surface.

- FPM-120(-TS) LCD Monitor
- 6 ft Video Cable
- 6 Ft AC Power Cable
- 6 ft RS232 Touch Interface Cable (touch screen units only)
- 10-32 Mounting Hardware. (For use with Panel Mount)
- Documentation and Driver CD ROM

Connecting Your Display

1. Connect all cables to the computer first. This includes the VGA cable, and if the unit has a touch screen, the RS 232 serial touch screen connection.
2. After connecting the cables between the LCD monitor and the computer, plug supplied AC power cord into a suitable AC outlet then into the LCD.
3. Power on the display. The On/Off switch is located where the AC power cord enters the unit
4. If your computer is off, turn on your computer.
5. Your display should now operate as a normal computer display, displaying the computers BIOS screens and booting into Windows or other operating system.

Note: If for any reason the display goes blank and/or displays “out of Range” or “No Input Signal” message on the screen, your computer or video source may be putting out a signal that is incompatible with the FPM-120(-TS). If this happens, reboot the computer with the previous display and adjust the display settings to be within the FPM-120(-TS) specifications (see Appendix C). Below is are the most common reasons a display may not operate correctly:

1. The resolution is to high or low for the LCD.
2. The refresh rate is set to high. Refresh on an LCD is different than a CRT. Set the refresh to 60Hz. CRT’s need a high refresh rate to avoid flicker. The refresh rate has no impact on an LCD.
3. The power source is incorrect, or there is no power. Check if the rear LED is ON or blinking. If the LED is not lit, check to be sure there is power to the unit.
4. The unit is malfunctioning. If you believe this to be true, disconnect the video cable from the rear of the LCD and connect to a known good display. If the computer display is working satisfactory and the video is within the appropriate range, then contact AutomationDirect.com technical support.

VICPAS
HMI Parts Center

3 Getting Started

Section

Display Features

- The FPM-120(-TS) is capable of displaying 256K colors in a continuous spectrum. The high contrast LCD enhances the image with no geometric distortion.
- FPM-120(-TS) Series directly accepts an analog 5 wire RGB with separate H/V. This is the standard PC video signal.
- The FPM-120(-TS) Series is auto synchronous adjusting the display to the appropriate input between VGA or SVGA..
- The FPM-120(-TS) Series is supplied with a Anti-Glare Touch Screeen [TS models] or an Anti-Glare impact window on non touch screen models.
- The FPM-120(-TS) Series has an integrated 115/220VAC power supply as standard on all models.

Adjusting the Display

The FPM-120 (-TS) Series display has an embedded microprocessor in the converter card [this is the electronics that drives the LCD]. In most cases the unit will require very little if any user intervention to operate correctly. That is, produce a sharp stable picture.

The micoprocessor in the display has the capability to adjust itself to the computer to which it is attached. If the picture is not satisfactory, the first step is to allow the unit to attempt to adjust itself to your computer.

Located on the rear of the unit is a membrane keypad used for adjusting the display. See figure 1 below:

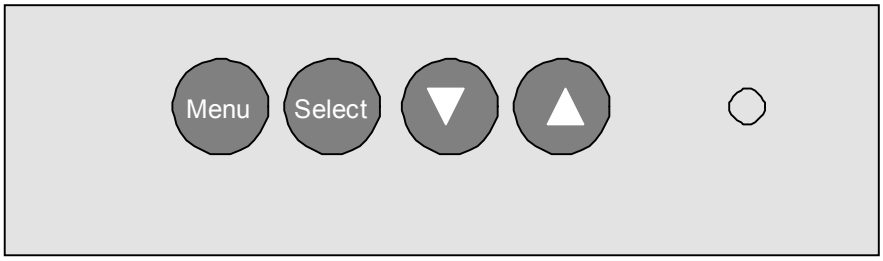

Figure 1

VICPAS
HMI Parts Center

Using the Auto-Adjust

Once you have the unit displaying the resolution you desire for your application do the following:

Press and release the “Select” button on the membrane. This will place the unit into a “Geometry Auto Adjust” mode. This operation will adjust the picture so it is centered both vertically and horizontally on the LCD screen. It will also make the necessary adjustments to the internal clock timing so that the picture is stable (without any decernable pixel jitter).

After having completed this step you may wish to adjust the color balance. This procedure adjusts for any imbalance in the Red, Green, and Blue levels from the video cable or video card. This is accomplished using the LCDs OSD (On Screen Menu) system.

OSD (On Screen Display) Adjustments

There are four membrane buttons (see Fig 1, above) located on the rear of the unit. They will activate the OSD and allow navigation to all adjustments if your unit requires adjustment.

OSD Layout

Main Menu	Component Being Adjusted
Automatic Adjust	Geometry & Color Balance
Horizontal Position	Horizontal position
Vertical Position	Vertical Position
Horizontal Size	Horizontal Size
Phase	Phase
Brightness	Brightness
Contrast	Contrast
Color	Red, Green, Blue Levels
OSD Language	English, Espanol, Deutsch, Francais, Italiano
Advanced	Factory Preset, OSD Hor. Pos., OSD Vert. POS.
Cancel	

All adjustment follows the basic adjustment procedure outlined below. If during adjustment you encounter difficulity. Exit the Menu system by pressing the Menu button and press the Select to Auto Adjust the unit.

To adjust the Auto Color Balance:

1. Press the **Menu** button.
2. Press **Select** to Highlight this Sub Menu
3. Press the to highlight Auto Color Balance.
4. Press the **Select** button.

The unit will test your video color balance and adjust it accordingly. When complete press **Menu** to Exit the OSD Menu system

When you press the “**Menu**” the new settings are saved and your setting will be stored in the unit’s non-volatile memory.

VICPAS
HMI Parts Center

Following are complete instructions on how to adjust each individual function on the OSD menu:

Automatic Adjustment

Press **Menu** and the automatic adjustment will be the first item to appear on the OSD.
Hit **Select** and then press the **Up/Down** button to navigate to Geometry.
Press **Select** again and the display will automatically adjust the geometry.
Press the **Up/Down** button to **Color Balance.**
Hit **Select** again and the display will automatically preset the color balance to a factory preset value.

Horizontal Position

Press **Menu**. Press the **Up** button to the second icon which is **Horz. Pos**
Hit **Select** and then press the **Up/Down** button to achieve the desired position. The desired value will be graphically illustrated along with a digital value.
When complete press **Select** and you are ready to move to the next adjustment.

Vertical Position

Press **Menu**. Press the **Up** button to the third icon which is **Vertical Position.**
Hit **Select** and then press the **Up/Down** button to achieve the desired position. The desired value will be graphically illustrated along with a digital value.
When complete press **Select** and you are ready to move to the next adjustment.

Horizontal Size

Press **Menu**. Press the **Up** button to the fourth icon which is **Horizontal Size.**
Hit **Select** and then press the **Up/Down** button to achieve the desired size. The desired value will be graphically illustrated along with a digital value.
When complete press **Select** and you are ready to move to the next adjustment.

Phase

Press **Menu**. Press the **Up** button to the fifth icon which is **Phase.**
Hit **Select** and then press the **Up/Down** button to achieve the desired phase.
The phase should be adjusted until the screen image is sharp and there is no
When complete press **Select** and you are ready to move to the next adjustment.

Brightness

Press **Menu**. Press the **Up** button to the sixth icon which is **Brightness.** Hit **Select** and then press the **Up/Down** button to achieve the desired brightness level. The desired value will be graphically illustrated along with a digital value.
When complete press **Select** and you are ready to move to the next adjustment.

Contrast

Press **Menu**. Press the **Up** button to the seventh icon which is **Contrast.**
Hit **Select** and then press the **Up/Down** button to achieve the desired contrast level. The desired value will be graphically illustrated along with a digital value.
When complete press **Select** and you are ready to move to the next adjustment.

Color

Color temperature adjustments allows the user to adjust for desired white balance. This can be achieved by adjusting the **Color Temperature** control or adjusting the individual **Red, Green or Blue** controls.
Press **Menu**. Press the **Up** button to the eight icon which is **Color .**

VICPAS
HMI Parts Center

Hit **Select** and then press the **Up/Down** button to select the **Color Temperature**. Hit **Select** again and adjust the **Up/Down** button and adjust to one of the desired six digital values. The six digital values are graphically illustrated.
When complete press **Select** and you are ready to move to the next adjustment.

If your require a unique white balance, you can adjust the individual colors to achieve this value by proceeding with the following adjustments.

Advanced Settings

Red

Press **Menu**. Press the **Up** button to the eight icon which is **Color.**
Hit **Select** and then press the **Up/Down** button to select **Red**.
Hit **Select** again and adjust the red value which is graphically illustrated along with a digital value.
When complete press **Select** and you are ready to move to the next adjustment.

Blue

Press **Menu**. Press the **Up** button to the eight icon which is **Color**.
Hit **Select** and then press the **Up/Down** button to select **Blue**.
Hit **Select** again and adjust the blue value which is graphically illustrated along with a digital value.
When complete press **Select** and you are ready to move to the next adjustment.

Green

Press **Menu**. Press the Up button to the eight icon which is **Color**.
Hit **Select** and then press the **Up/Down** button to select **Green**.
Hit **Select** again and adjust the green value which is graphically illustrated along with a digital value.
When complete press **Select** and you are ready to move to the next adjustment.

Optional Settings

OSD Language

This function allows you to convert from English to the following languages. Espanol, Deutsch, Francais, Italiano. If you desire one of these languages, proceed to adjust as follows. Espanol will be used as an example.

Espanol

Press **Menu**. Press the **Up** button to the ninth icon which is **OSD Language.**
Hit **Select** and then press the **Up/Down** button to select **Espanol**.
Hit **Select** again and the display will convert all text to Espanol.
When complete press **Select** and you are ready to move to the next adjustment

VICPAS
HMI Parts Center

4 Touch Screen Setup

Section

Introduction to Touch Screens

Touch screen interfaces have become the standard interface in the past 5 years. They are, rugged, reliable, extremely flexible and easier than ever to implement! The universal acceptance of the Windows GUI [Graphical User Interface] along with the extensive use of a mouse interface has significantly accelerated the use of a touch interface. Basically think of your touch screen as if it were a mouse.

AutomationDirect.com touch systems are mouse emulators. By installing a software driver and connecting to a serial port, the touch screen will support all the primary mouse functions:

The FPM-180(-TS) touch screen interface, is a high resolution, analog resistive. Following is a quick explanation of what all this means.

High Resolution: The touch screen resolution is 400 ppi [points per inch]

Analog Resistive: The actual touch glass is an analog device. Meaning there is a very low voltage applied to the X and Y axis of the touch screen. This current is applied to ITO [Iridium Tin Oxide] that is sputtered onto a polyester membrane. When you touch the screen you are changing the resistance on both the X and Y axis, producing an analog value that references a particular location.
This type of screen can be activated with a gloved finger or mechanical stylus.

The touch screen itself is connected to electronics [internal to the display unit] that provide the Analog to Digital conversion. When the screen is touched, the electronics convert the analog voltage to a digital value and add a "Mouse Click". This touch data is sent out from the display serial port to the PC serial port where the touch driver presents the data to the operating systems as if it were from a normal PC mouse. When the touch is released the new XY location is sent along with a "Mouse Up Click".

The touch screen interface to the PC is RS-232, so the recommend maximum distance from the PC is 50 feet., The driver and and interface have been tested to 50 Ft. using high quality cables. High quaility cables and connectors are important, especially if field connections are made. Poor quality cables will drastically reduce the performance of the RS-232 interface. The touch driver default baud rate is 9600.

Touch Screen Setup and Configuration:

If the unit does not have a touch screen, your configuration is complete. If your display is fitted with the optional touch screen interface, the following section will outline installation and set up. This system requires no special software knowledge, and can be installed and set up in minutes. The following section gives a detailed explanation of the software setup and configuration

VICPAS
HMI Parts Center

Touch Screen Driver Installation for *Windows 98*

Required items to **know** or **have** to install the Touch Driver.

- What Operating System you are using. **Windows 98**
- What Serial Port you are connected to. **Usually COM 1 or COM 2**
- The type of touch screen. **Smartset**
- The CD-ROM or Floppy disk included with the system.

Touch Screen Driver Installation for Windows 98

- Insert the provided CD
- Select Link to the Windows 98 driver
- Select **Open** from the Windows dialog box.
- Select **SmartSet** Controller for Com1 or Com2
- Remove the CD.
- Restart the computer; you will be prompted to calibrate the touch screen.
- Touch each of the 3 targets as directed. If the unit does not respond to your calibration touches then you have probably selected the wrong COM port. If so, reinstall the driver and selecting the correct COM port.
- You are now ready to use your touch screen.

Note 1: The touch screen calibration information is maintained in the computer. If you change computers, you will need to reinstall the touch screen driver software and recalibrate.

Note 2: If for any reason the touch screen performance is unsatisfactory, you can recalibrate at any time. This is done from the ELO icon under the Windows control panel

VICPAS
HMI Parts Center

Touch Screen Driver Installation for *Windows NT 4.0*

Required items to **know** or **have** to install the Touch Driver.

- What Operating System you are using. **Windows NT 4.0**
- What Serial Port you are connected to. **Usually COM 1 or COM 2**
- The type of touch screen. **Smartset**
- The CD-ROM or Floppy disk included with the system.

Touch Screen Driver Installation for Windows NT 4.0

- Insert the provided CD
- Select Link to the Windows NT driver
- Select **Open** from the Windows dialog box.
- Select **Next**
- Select **Yes** - To the license agreement
- Select **Next** - To the default installation folder
- Select **Next** - For Single Monitor installation
- Select the Com Port to which the touch interface is connected and **Next**
- Select **Finish**
- Remove the CD.
- Restart the computer. You will be prompted to calibrate the touch screen.
- Touch each of the 3 targets as directed. If the unit does not respond to your calibration touches then you have probably selected the wrong COM port. If so, press the Esc key on the keyboard to exit.
- Go to the ELO icon under Windows Control Panel.
- Select the correct Com Port, and Restart the computer.
- If this fails, reinstall the driver and select the correct COM port
- Once restarted, select the ELO icon under Windows Control Panel
- Select **Calibrate**, and then touch each of the 3 targets as they are displayed.
- You are now ready to use your touch screen.

Note 1: The touch screen calibration information is maintained in the computer. If you change computers, you will need to reinstall the touch screen driver software and recalibrate.

Note 2: If for any reason the touch screen performance is unsatisfactory, you can recalibrate at any time. This is done from the ELO icon under the Windows control panel

VICPAS
HMI Parts Center

Touch Screen Driver Installation for *Windows 2000*

Required items to **know** or **have** to install the Touch Driver.

- What Operating System you are using. **Windows 2000**
- What Serial Port you are connected to. **Usually COM 1 or COM 2**
- The type of touch screen. **Smartset**
- The CD-ROM or Floppy disk included with the system.

Touch Screen Driver Installation for Windows 2000

- Insert the provided CD
- Select Link to Windows 2000 driver
- Select **Open** from the Windows dialog box.
- Select **Next**
- Select **Yes** - To the license agreement
- Select the Com Port to which the touch interface is connected and Next
- Select **Next,** the driver will now start to install.
- Select **YES** - To continue
- Select **Finish**
- Remove the CD.
- Select **YES** to Restart.
- When the system restarts touch each of the 3 targets as directed.
- If the unit does not respond to your calibration touches then you have probably selected the wrong COM port. If so, press the Esc key to exit.
- Go to the ELO icon under Windows Control Panel.
- Select the correct Com port, and restart the computer.
- Once restarted, select the ELO icon under Windows Control Panel
- Select **Align and Calibrate**; then touch each of the 3 targets as directed.
- You are now ready to use your touch screen.

Note 1: The touch screen calibration information is maintained in the computer. If you change computers, you will need to reinstall the touch screen driver software and recalibrate.

Note 2: If for any reason the touch screen performance is unsatisfactory, you can recalibrate at any time. This is done from the ELO icon under the Windows control panel

VICPAS
HMI Parts Center

Touch Screen Driver Installation for *Windows XP*

Required items to **know** or **have** to install the Touch Driver.

- What Operating System you are using. **Windows XP**
- What Serial Port you are connected to. **Usually COM 1 or COM 2**
- The type of touch screen. **Smartset**
- The CD-ROM or Floppy disk included with the system.

Touch Screen Driver Installation for Windows XP

- Insert the provided CD
- Select Link to XP driver
- Select **Open** from the Windows dialog box.
- Select Yes - To the license agreement
- Select the Com Port to which the touch interface is connected and Next
- Select **Next,** the driver will now start to install.
- Select **YES** - To continue
- Select **Finish**
- Remove the CD
- Select **YES** to Restart
- Go to the ELO icon under Windows Control Panel.
- Verify the Com Port is correct
- Select **Align**; then touch each of the 3 targets as directed.
- If the unit does not respond to your calibration touches then you have probably selected the wrong COM port. If so, press the Esc key to exit.
- Select the correct Com port, and restart the computer, then align the touchscreen.
- You are now ready to use your touch screen.

Note 1: The touch screen calibration information is maintained in the computer. If you change computers, you will need to reinstall the touch screen driver software and recalibrate.

Note 2: If for any reason the touch screen performance is unsatisfactory, you can recalibrate at any time. This is done from the ELO icon under the Windows control panel

5 Section Mounting Instructions

Panel Mounting Procedure

1. Cut and drill the panel (refer to Figure 2; Panel Mount Drawing Appendix D). Measurements are in inches. A template of the hole pattern has been supplied with your monitor to assist in making the mounting holes accurately. Also, there is an AutoCad .dxf file included on the provided CD. This computer file can be used in a design drawing or forwarded to your panel fabricator for the proper mounting

2. If access to the side of the monitor is not available following installation, attach the power and video cables to the side of the monitor at this time.
3. Install the monitor in the prepared cutout.
4. Install the washers and lock nuts supplied with the monitor.
   Note: Use #10-32 nuts for mounting.
5. Tighten all mounting nuts evenly to a torque of 24 inch-pounds.

ATTENTION: Mounting nuts must be tightened to a torque of 24 inch-pounds to provide panel seal and avoid potential damage. AutomationDirect.com assumes no responsibility for water or chemical damage to the monitor or other equipment within the enclosure due to improper installation.

6. Attach the power, video and touch screen cables (if this is a –TS unit) to the side of the monitor.

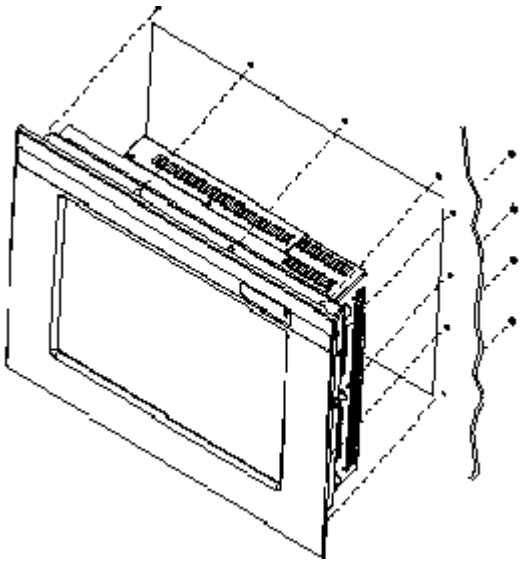

Figure 2: Panel Mount Drawing

VICPAS
HMI Parts Center

6 Troubleshooting Tips

Section

No Picture	The signal cable should be properly connected to the FPM-120(-TS) and computer. Try disconnecting the video cable from the display and connecting to another display if available to confirm the presence of proper video. Make sure power is connected to the proper AC source. Make sure the resolution mode is supported by the display and check display settings of the PC Confirm that the video cable is not defective.

Image Persistence	Image persistence occurs when a ghost of an image remains on the screen after the screen image has been changed. Unlike a CRT monitor, an LCD monitor's image persistence is not permanent. To erase an image ghost, turn the monitor off for several hours. What happens is the the liquid crystals after extened periods of operation with take a "set". To avoid this condition, install a screen saver progam on the computer

Picture Quality & Image Stability	Check for proper video cable for proper grounding and shielding. Check the signal source for proper signal. Check for proper adjustment of the Phase and Frequency controls. Check for proper recommended signal timing.

VICPAS
HMI Parts Center

Green LED not lit	Check for proper power and power connections

Display image is not properly sized	Press the “Select” button to Auto Adjust the display Adjust the Vertical and Horizontal size controls via the OSD. (Reference setup adjustments) Ensure that a supported mode is selected on the display card or system being used. Consult the display card or system manual for proper video.

Image will not adjust	Video timing outside of range. Use the on-screen menu to adjust the Clock Setting. Make sure timing is within VESA standard.

Slight distortion in text or Graphics	Not working in native resolution.

Display is present but “bars” Appear or roll across screen	Ground loop problem between computer and display Interference from adjacent equipment.

Vertical shaded bars on Screen image	Horizontal size not properly adjusted. Adjust horizontal size

Image is not stable.	Monitor has incorrect or bad sync signals.. Check for proper video cable installation. Replace suspected faulty cable. Check to ensure that video source is within the display’s operating range.

VICPAS
HMI Parts Center

7 Cleaning & Maintenance

Section

Cleaning

CAUTION: SHUT OFF YOUR TOUCH SCREEN BEFORE CLEANING!!

IF YOUR DISPLAY IS A –TS MODEL, THAT IS A TOUCH SCREEN DISPLAY, THE SCREEN WILL BE ACTUATED BY CLEANING. PRESSING ON THE SCREEN WHILE CLEANING WILL BE SEEN AS A TOUCH TO THE SYSTEM WHICH COULD CREATE A POTENTIALLY DANGEROUS CONDITION!!

Occasionally clean the display panel and cabinet with a soft cloth dampened (not soaked) with a mild (non-abrasive) glass cleaner. Keep turning a fresh side of the cloth toward the screen surface to avoid scratching it with accumulated grit.

Note: The solvent should be applied only to the cloth, and not directly on the monitor screen.

Do not use paper products as they may scratch the surface. To minimize the risk of abrasion, allow the screen to air dry. Special care should be taken when cleaning a touch screen or polycarbonate shield that is installed over the screen. Abrasive and certain chemical cleaners can damage the surface.
Never use alcoholic or ammoniac cleaners to clean the polycarbonate shield or a touch screen.

Replacing a Line Cord

To avoid shock and fire hazards, the monitor's power cord should be replaced if the insulation becomes broken or if it develops a loose internal connection.

Other Maintenance

Qualified service personnel should perform all maintenance, except for the power cord replacement described above.

VICPAS
HMI Parts Center

8 Appendices

Section

Appendix A – Video Pin Assignments

Pin assignments for the HD15 video connector

Pin 1	Red Video	Pin 9	No Connection
Pin 2	Green Video	Pin 10	Sync Ground
Pin 3	Blue Video	Pin 11	Not Used
Pin 4	Not Used	Pin 12	Bi-Directional Data
Pin 5	Return	Pin 13	Horizontal Sync
Pin 6	Red Video Ground	Pin 14	Vertical Sync
Pin 7	Green Video Ground	Pin 15	Data Clock (SCL)
Pin 8	Blue Video Ground		

Appendix B – RS-232 Pin Assignments

Pin assignment for 9 Pin Optional Touch Screen Connector

Pin 1	DCD	Data Carrier Detect
Pin 2	RD (Rx)	Receive Data
Pin 3	SD (Tx)	Transmit Data
Pin 4	DTR	Data Terminal Ready
Pin 5	SG	Signal Ground
Pin 6	DSR	Data Set Ready
Pin 7	RTS	Request to Send
Pin 8	CTS	Clear to Send
Pin 9	NC	No Connection

VICPAS
HMI Parts Center

Appendix C –General Specifications

FPM-120 & FPM-120-TS

Active Screen Area	9.69" x 7.25"
Brightness	300
Contrast	200:1
Lamp Life	50K
Max Screen Resolution	VGA-SVGA
Native Resolution (Best Picture)	SVGA
View Angle L / R	55/55
View Angle Up / Dn	40/45
Power Req.	90-264 VAC Auto-switching
Current Draw	.15 / 120 VAC
Installed Depth	2.38"
Chassis Construction	16 Ga SS
Bezel Construction	Al Machined .250"
Bezel OD	15" x 12.5"
Bezel Finish	Black Textured
Auto Adjust	Yes
5 Wire Touch	Yes
Recessed Cable Exit	Yes
Video Interface	VGA (HD-15F)
Colors	256,000
Operating Temp	0-50
Storage Temp	0-60
Storage Humidity	10-95
NEMA Front End	4/12
Input power	20W

VICPAS
HMI Parts Center

Appendix D – Mounting Dimentions

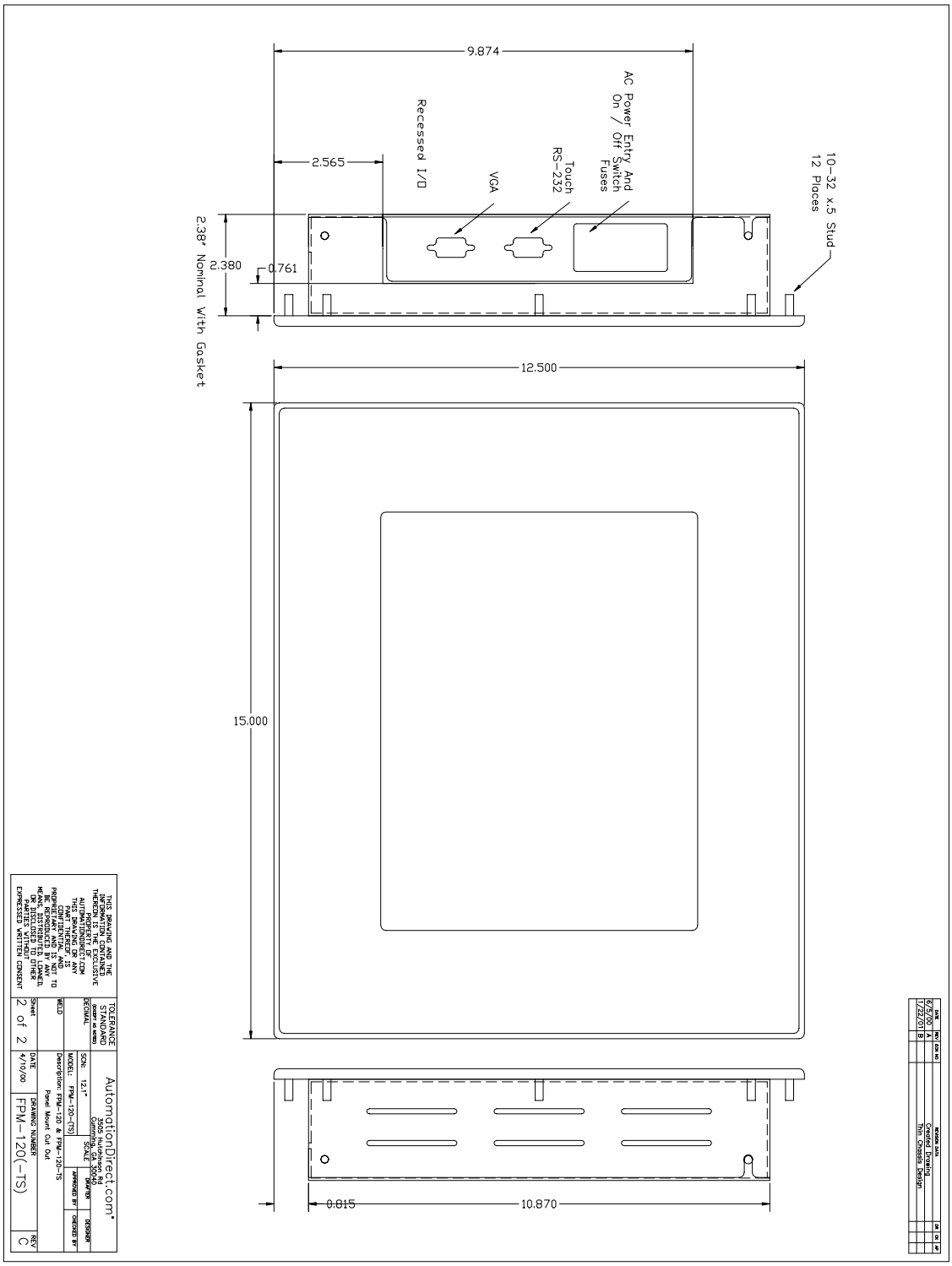

THIS DRAWING AND THE INFORMATION THEREON IS THE EXCLUSIVE PROPERTY OF AUTOMATIONDIRECT.COM AND IS NOT TO BE USED IN ANY WAY DETRIMENTAL TO THE INTERESTS OF AUTOMATIONDIRECT.COM. THIS DRAWING IS CONFIDENTIAL AND IS NOT TO BE REPRODUCED BY ANY MEANS NOR DISCLOSED TO OTHER PARTIES WITHOUT EXPRESSED WRITTEN CONSENT

TOLERANCE STANDARD DECIMAL (EXCEPT AS NOTED)

WELD

AutomationDirect.com
3505 Hutchinson Rd
Cumming, GA 30040

SCALE

SIZE: 12.1"

MODEL: FPM-120-(TS)

Description: FPM-120 & FPM-120-TS
Panel Mount Cut Out

DRAFTER

APPROVED BY

DESIGNED BY

DESIGNER

Sheet 2 of 2

DATE 4/19/00

DRAWING NUMBER FPM-120(-TS)

REV C

REVISION DATA			
REV	DESCRIPTION	BY	CK
A	Changed Panel Thin Chassis Design		
B	1/22/2011		

DATE	REV	ECN NO	REVISION DATA	DR	CH	AP
10/01	C		Panel Cut Out And Mounting			

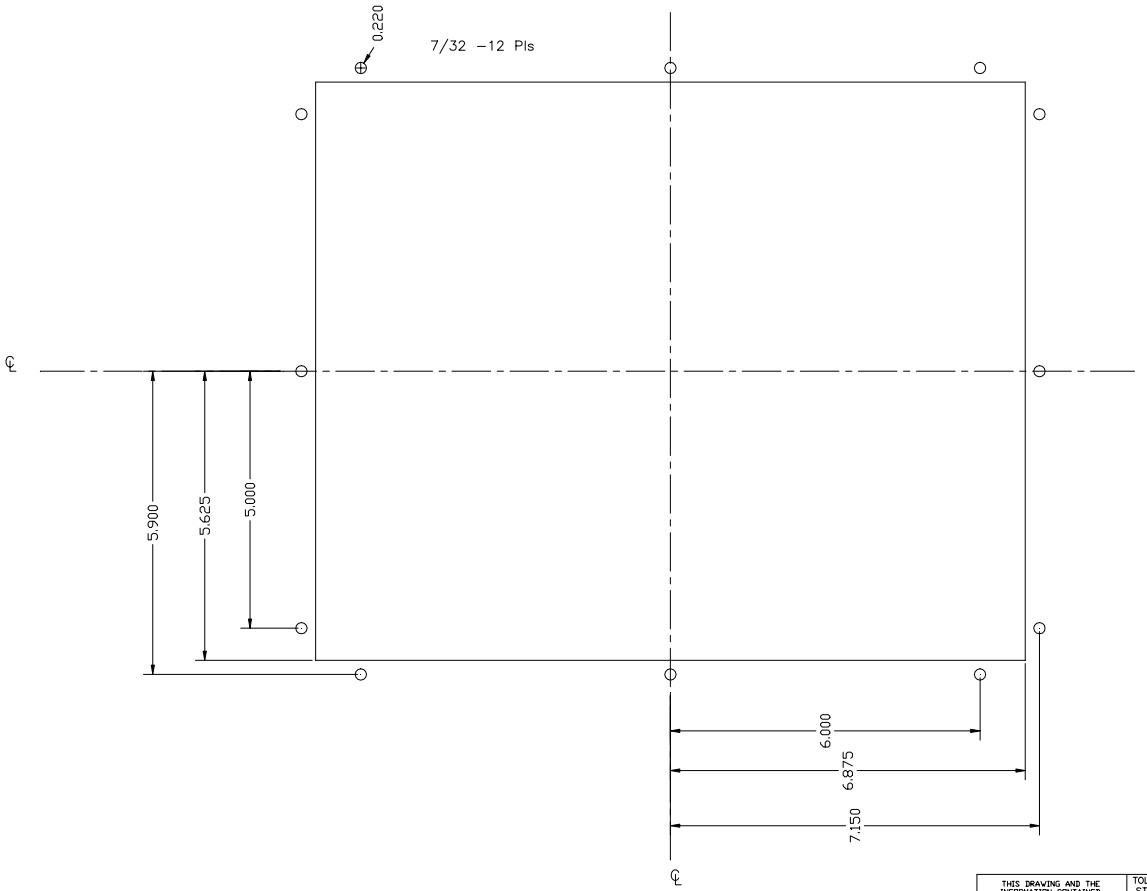

THIS DRAWING AND THE INFORMATION CONTAINED THEREIN IS THE EXCLUSIVE PROPERTY OF AUTOMATIONDIRECT.COM THIS DRAWING OR ANY PART THEREOF, IS CONFIDENTIAL AND PROPRIETARY AND IS NOT TO BE REPRODUCED BY ANY MEANS, DISTRIBUTED, LOANED, OR DISCLOSED TO OTHER PARTIES WITHOUT EXPRESSED WRITTEN CONSENT

TOLERANCE STANDARD (EXCEPT AS NOTED)

DECIMAL

WELD

AutomationDirect.com•
3505 Hutchinson Rd
Cumming, GA 30040

SCALE: SCN: 12.1"

DRAFTER | DESIGNER | APPROVED BY | CHECKED BY

MODEL: FPM-120-(TS)

Description: FPM-120 & FPM-120-TS
Panel Mount Cut Out

Sheet 1 of 2

DATE 4/10/00

DRAWING NUMBER FPM-120-TEMPLET

REV C

VICPAS
HMI Parts Center

NOTES

Model Number: _____

Serial Number: _____

FPM-150
FPM-150-TS

LCD Monitor User Guide

Revised 12/02

VICPAS
HMI Parts Center

FPM-150 & FPM-TS

Table Of Contents

Section 1 Introduction
About LCD Monitors
Product Safety Precautions

Section 2 Display Setup
Included Parts
Connecting Your Display

Section 3 Getting Started
Display Features
Getting Started
Adjusting the Display
Using the Auto-Adjust
OSD (On Screen Display) Adjustments

Section 4 Touch Screen Set up
Introduction to Touch Screens
Touch Screen Driver Installation
- Windows 98
- Windows NT 4.0
- Windows 2000
- Windows XP

Section 5 Mounting Instructions

Section 6 Trouble Shooting Tips

Section 7 Cleaning and Maintenance

Section 8 Appendices
A-VGA Pin Assignment
B-RS-232 Pin Assignment
C-General Specifications
D-Mounting Dimensions

VICPAS
HMI Parts Center

1 LCD Introduction

Section

About LCD Monitors

What you gain by using an LCD monitor for your industrial display is the future of display technology. CRTs although they have dropped in cost significantly, do not offer the performance, reliability, and mounting options available with LCDs. LCD monitors consist primarily of an LCD, video board and a backlight. The LCD determines to a large extent the viewing angle, brightness and contrast. Beyond that it is the function of the video board, which converts the analog RGB (Red, Green, Blue) signals from a standard video card to a high quality, digital RGB that the LCD can display.

LCD monitors can can be set for one or more of the following resolutions:

VGA: 640 x480
SVGA: 800x600
XGA 1024 x 768
SXGA 1280 x1024
UXGA 1600x 1200

Note: The VGA acronym stands for Video Graphics Adapter. It is used to describe both the most common type of display interface used by PC's and lowest resolution setting for this interface. Originally only the VGA [640x480] resolution was available on a VGA interface. Today all of the above interfaces are available on a VGA interface, but not all monitors support all resolutions. . The native resolution of the LCD is normally the maxium resolution that the LCD can display, and is the resolution that the LCD will exhibit the best display charastics Check the monitor specifications (Appendix C) for the resolutions supported by this monitor.

Recently the video card has taken on a new role. It is the responsibility of this device to "scale" a particular video resolution to the "native" resolution of the LCD. This enables a computer set to output a VGA [640x480] resolution signal to be properly displayed on an XGA [1024x768] LCD screen. Without the scaling engine, the displayed picture would be in the center $^1/_3$ of the LCD. The scaling engine mathematically converts the 640x480 to 1024x768. This my sound simple but it is in fact a complex algorithm that adjusts for different aspect ratios and pixel alignment, essentially smoothing text and graphics to produce a picture that is pleasant to the eye.

All Automationdirect.com displays from 12.1" (800x600) to 18.1" (1280x1024) incorporate scaling engines in the converter card.

VICPAS
HMI Parts Center

Safety Precautions

CAUTION: SHUT OFF YOUR TOUCH SCREEN BEFORE CLEANING!!

IF YOUR DISPLAY IS A –TS MODEL, THAT IS A TOUCH SCREEN DISPLAY, THE SCREEN WILL BE ACTUATED BY CLEANING. PRESSING ON THE SCREEN WHILE CLEANING WILL BE SEEN AS A TOUCH TO THE SYSTEM WHICH COULD CREATE A POTENTIALLY DANGEROUS CONDITION!!

- Do not attempt to service this display yourself. The rear chassis has a seal so that non qualified personal will not expose themselves to dangerous voltages or other risks.
- To protect from electrical shock, unplug the display power supply from the wall before moving.
- Do not use this display near water
- Do not place any heavy objects on the power cords. Damage may cause electrical shock.
- Unplug the power supply from the wall or unit if one of the following conditions exists.
  - Power cord or plug is damaged or frayed
  - Liquid is spilled into the display or the display is exposed to rain or water.
  - The display does not operate normally when the operating instructions are followed.
  - The display has been dropped or the enclosure has been damaged.
  - The display exhibits a distinct change in performance, indicating a need for service.
- Ensure that sufficient space is available around the display to provide air circulation for cooling.
- Ensure that the ambient air temperature will not exceed the specified maximum temperature.
- Do not expose the display to direct sunlight or heat.

2 Section Display Setup

Your LCD monitor package will consist of the primary components listed below.

Open shipping container and lay all components on a flat clean surface.

- FPM-150(-TS) LCD Monitor
- 6 ft Video Cable
- 6 Ft AC Power Cable
- 6 ft RS232 Touch Interface Cable (touch screen units only)
- 10-32 Mounting Hardware. (For use with Panel Mount)
- Documentation and Driver CD ROM

Connecting Your Display

1. Connect all cables to the computer first. This includes the VGA cable, and if the unit has a touch screen, the RS 232 serial touch screen connection.
2. After connecting the cables between the LCD monitor and the computer, plug supplied AC power cord into a suitable AC outlet then into the LCD.
3. Power on the display. The On/Off switch is located where the AC power cord enters the unit
4. If your computer is off, turn on your computer.
5. Your display should now operate as a normal computer display, displaying the computers BIOS screens and booting into Windows or other operating system.

Note: If for any reason the display goes blank and/or displays “out of Range” or “No Input Signal” message on the screen, your computer or video source may be putting out a signal that is incompatible with the FPM-150(-TS). If this happens, reboot the computer with the previous display and adjust the display settings to be within the FPM-150(-TS) specifications (see Appendix C). Below is are the most common reasons a display may not operate correctly:

1. The resolution is to high or low for the LCD.
2. The refresh rate is set to high. Refresh on an LCD is different than a CRT. Set the refresh to 60Hz. CRT’s need a high refresh rate to avoid flicker. The refresh rate has no impact on an LCD.
3. The power source is incorrect, or there is no power. Check if the rear LED is ON or blinking. If the LED is not lit, check to be sure there is power to the unit.

The unit is malfunctioning. If you believe this to be true, disconnect the video cable from the rear of the LCD and connect to a known good display. If the computer display is working satisfactory and the video is within the appropriate range, then contact AutomationDirect.com technical support

VICPAS
HMI Parts Center

3 Getting Started

Section

Display Features

- The FPM-150(-TS) is capable of displaying 16M (24 Bit) colors in a continuous spectrum. The high contrast LCD enhances the image with no geometric distortion.
- FPM-150(-TS) Series directly accepts an analog 3,4, or 5 wire RGB with separate H/V, composit, or sync on green. This is the standard PC video signal.
- The FPM-150(-TS) Series is auto synchronous adjusting the display to the appropriate input between VGA and SXGA (Note: XGA is the displays native mode, SXGA is interpolated).
- The FPM-150(-TS) Series is supplied with a Anti-Glare Touch Screeen [TS models] or an Anti-Glare impact window on non touch screen models.
- The FPM-150(-TS) Series has an integrated 115/220VAC power supply as standard on all models.

Adjusting the Display

The FPM-150 (-TS) Series display has an embedded microprocessor in the converter card [this is the electronics that drives the LCD], and has been recently updated with a more powerful chip set. In most cases the unit will require very little if any user intervention to operate correctly. That is, produce a sharp stable picture.

The micoprocessor in the display has the capability to adjust itself to the computer to which it is attached. This autoadjustment will take place when the unit is first installed and connected to a computer and there after, if the video input changes, or is user initated. If the picture is not satisfactory, the first step is to allow the unit to attempt to re-adjust itself to your computer.

Located on the rear of the unit is a membrane keypad used for adjusting the display. See figure 1 below:

Figure 1

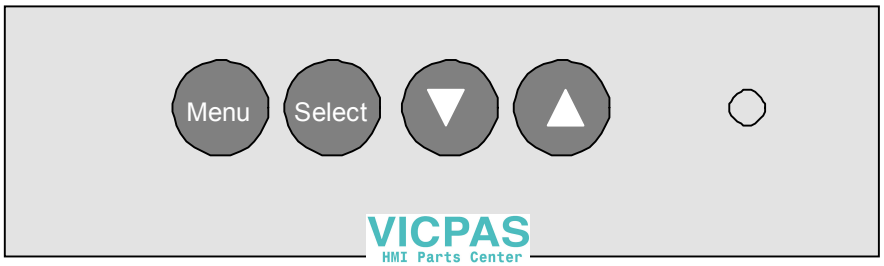

Using the Auto-Adjust

The FPM-150(-TS) will attempt to adjust itself to your computers current video model. If the picture is stable, and centered vertically and horizontally the automatic adjustment is complete. If however the picture is not stable, and centered vertically and horizontally you can re-initate the auto-adjustment. Once you have the unit displaying the resolution you desire for your application do the following:

Press and release the “Select” button on the membrane. This will place the unit into a “Geometry Auto Adjust” mode. This operation will adjust the picture so it is centered both vertically and horizontally on the LCD screen. It will also make the necessary adjustments to the internal clock timing so that the picture is stable (without any decernable pixel jitter).

After having completed this step you may wish to adjust the color balance. This procedure adjusts for any imbalance in the Red, Green, and Blue levels from the video cable or video card. This is accomplished using the LCDs OSD (On Screen Menu) system.

OSD (On Screen Display) Adjustments

There are four membrane buttons (see Fig 1, above) located on the rear of the unit. They will activate the OSD and allow navigation to all adjustments if your unit requires adjustment.

Press MENU key,OSD screen appears. [See Figure 2]

Press UP/DOWN key, you can move between the five primary functions:
Press Select key at Picture group to highlight this sub menu. You can now navigate the sub menu using the UP/DOWN keys. To make an adjustment to an item press Select and use the UP/DOWN buttons to make your adjustments

At anytime, press the Menu button Two times to Exit and Save your settings.
This convention of Menu, Navigate, Select Sub Menu, Navigate, Select Item and adjust is used throughout the OSD screen process.

VICPAS
HMI Parts Center

Press MENU key to return previous state and press MENU key twice to exit OSD.

PICTURE

Press MENU key to bring up the OSD. Press UP/DOWN key, to move between the 5 primary screen functions. Press the Select button at Picture, to select it. Press the UP/DOWN key, you can now move between functions and press Select to adjust the value of each item with the UP/DOWN key. Press MENU key to return previous state and press MENU key twice to exit OSD.

- BRIGHTNESS Function of adjusting main screen brightness.
- CONTRAST Function of adjusting main screen contrast.
- FREQUENCY Function of adjusting main screen sampling clock frequency.
- PHASE Function of adjusting main screen sampling clock phase.
- H POSITION Function of adjusting the horizontal position of main screen .
- V POSITION Function of adjusting the vertical position of main screen .

ADVANCED

Press MENU key to bring up the OSD. Press UP/DOWN key, to move between the 5 primary screen functions. Press the Select button at Advanced, to select it. Press the UP/DOWN key, you can now move between functions and press Select to adjust the value of each item with the UP/DOWN key. Press MENU key to return previous state and press MENU key twice to exit OSD.

- Color Temp Function of setup of main color. (Bluish, Normal, Reddish)
- User RED Function of adjusting value of RED.
- User BLUE Function of adjusting value of BLUE.
- User GREEN Function of adjusting value of GREEN.
- Gamma Function of adjusting value of color ratio.

COLOR WARP

Press MENU key to bring up the OSD. Press UP/DOWN key, to move between the 5 primary screen functions. Press the Select button at Color Warp, to select it. Press the UP/DOWN key, you can now move between functions and press Select to adjust the value of each item with the UP/DOWN key. Press MENU key to return previous state and press MENU key twice to exit OSD

- Color Warp Function of adjusting curve on main screen.
- Mode Function of selecting curve on main screen.
- Custom Center Function of adjusting color warp on center.
- Custom range Function of adjusting range on color warp.
- Saturation Function of adjusting saturation warp on center.
- Custom hue Function of adjusting the tone of color.

OPTIONS

Press MENU key to bring up the OSD. Press UP/DOWN key, to move between the 5 primary screen functions. Press the Select button at Options, to select it. Press the UP/DOWN key, you can now move between functions and press Select to adjust the value of each item with the UP/DOWN key. Press MENU key to return previous state and press MENU key twice to exit OSD

- Osd V Pos Function of adjusting the vertical position of OSD image .
- Osd H Pos Function of adjusting the horizontal position of OSD image.
- Osd Function of moving OSD image quickly.

UTILITIES

Press MENU key to bring up the OSD. Press UP/DOWN key, to move between the 5 primary screen functions. Press the Select button at Utilities, to select it. Press the UP/DOWN key, you can now move between functions and press Select to adjust the value of each item with the UP/DOWN key. Press MENU key to return previous state and press MENU key twice to exit OSD

- OSD Timeout Function of adjusting OSD disappear time .
- OSD Bkground Function of adjusting at transparancy on main screen to osd image.
- Auto Adjust Function of finding optimized main screen automatically.
- Factory Reset Function of resetting all value on OSD.
- Power On Time Function of indicating system on time.
- Bklight OnTime Function of indicating panel on time.

VICPAS
HMI Parts Center

4 Touch Screen Setup

Section

Introduction to Touch Screens

Touch screen interfaces have become the standard interface in the past 5 years. They are, rugged, reliable, extremely flexible and easier than ever to implement! The universal acceptance of the Windows GUI [Graphical User Interface] along with the extensive use of a mouse interface has significantly accelerated the use of a touch interface. Basically think of your touch screen as if it were a mouse.

AutomationDirect.com touch systems are mouse emulators. By installing a software driver and connecting to a serial port, the touch screen will support all the primary mouse functions:

The FPM-150(-TS) touch screen interface, is a high resolution, analog resistive. Following is a quick explanation of what all this means.

High Resolution: The touch screen resolution is 400 ppi [points per inch]

Analog Resistive: The actual touch glass is an analog device. Meaning there is a very low voltage applied to the X and Y axis of the touch screen. This current is applied to ITO [Iridium Tin Oxide] that is sputtered onto a polyester membrane. When you touch the screen you are changing the resistance on both the X and Y axis, producing an analog value that references a particular location.
This type of screen can be activated with a gloved finger or mechanical stylus.

The touch screen itself is connected to electronics [internal to the display unit] that provide the Analog to Digital conversion. When the screen is touched, the electronics convert the analog voltage to a digital value and add a "Mouse Click". This touch data is sent out from the display serial port to the PC serial port where the touch driver presents the data to the operating systems as if it were from a normal PC mouse. When the touch is released the new XY location is sent along with a "Mouse Up Click".

The touch screen interface to the PC is RS-232, so the recommend maximum distance from the PC is 50 feet., The driver and and interface have been tested to 50 Ft. using high quality cables. High quaility cables and connectors are important, especially if field connections are made. Poor quality cables will drastically reduce the performance of the RS-232 interface. The touch driver default baud rate is 9600.

Touch Screen Setup and Configuration:

If the unit does not have a touch screen, your configuration is complete. If your display is fitted with the optional touch screen interface, the following section will outline installation and set up. This system requires no special software knowledge, and can be installed and set up in minutes. The following section gives a detailed explanation of the software setup and configuration

VICPAS
HMI Parts Center

Touch Screen Driver Installation for *Windows 98*

Required items to **know** or **have** to install the Touch Driver.

- What Operating System you are using. **Windows 98**
- What Serial Port you are connected to. **Usually COM 1 or COM 2**
- The type of touch screen. **Smartset**
- The CD-ROM or Floppy disk included with the system.

Touch Screen Driver Installation for Windows 98

- Insert the provided CD
- Select Link to the Windows 98 driver
- Select **Open** from the Windows dialog box.
- Select **SmartSet** Controller for Com1 or Com2
- Remove the CD.
- Restart the computer; you will be prompted to calibrate the touch screen.
- Touch each of the 3 targets as directed. If the unit does not respond to your calibration touches then you have probably selected the wrong COM port. If so, reinstall the driver and selecting the correct COM port.
- You are now ready to use your touch screen.

Note 1: The touch screen calibration information is maintained in the computer. If you change computers, you will need to reinstall the touch screen driver software and recalibrate.

Note 2: If for any reason the touch screen performance is unsatisfactory, you can recalibrate at any time. This is done from the ELO icon under the Windows control panel

VICPAS
HMI Parts Center

Touch Screen Driver Installation for *Windows NT 4.0*

Required items to **know** or **have** to install the Touch Driver.

- What Operating System you are using. **Windows NT 4.0**
- What Serial Port you are connected to. **Usually COM 1 or COM 2**
- The type of touch screen. **Smartset**
- The CD-ROM or Floppy disk included with the system.

Touch Screen Driver Installation for Windows NT 4.0

- Insert the provided CD
- Select Link to the Windows NT driver
- Select **Open** from the Windows dialog box.
- Select **Next**
- Select **Yes** - To the license agreement
- Select **Next** - To the default installation folder
- Select **Next** - For Single Monitor installation
- Select the Com Port to which the touch interface is connected and **Next**
- Select **Finish**
- Remove the CD.
- Restart the computer. You will be prompted to calibrate the touch screen.
- Touch each of the 3 targets as directed. If the unit does not respond to your calibration touches then you have probably selected the wrong COM port. If so, press the Esc key on the keyboard to exit.
- Go to the ELO icon under Windows Control Panel.
- Select the correct Com Port, and Restart the computer.
- If this fails, reinstall the driver and select the correct COM port
- Once restarted, select the ELO icon under Windows Control Panel
- Select **Calibrate**, and then touch each of the 3 targets as they are displayed.
- You are now ready to use your touch screen.

Note 1: The touch screen calibration information is maintained in the computer. If you change computers, you will need to reinstall the touch screen driver software and recalibrate.

Note 2: If for any reason the touch screen performance is unsatisfactory, you can recalibrate at any time. This is done from the ELO icon under the Windows control panel

VICPAS
HMI Parts Center

Touch Screen Driver Installation for *Windows 2000*

Required items to **know** or **have** to install the Touch Driver.

- What Operating System you are using. **Windows 2000**
- What Serial Port you are connected to. **Usually COM 1 or COM 2**
- The type of touch screen. **Smartset**
- The CD-ROM or Floppy disk included with the system.

Touch Screen Driver Installation for Windows 2000

- Insert the provided CD
- Select Link to Windows 2000 driver
- Select **Open** from the Windows dialog box.
- Select **Next**
- Select **Yes** - To the license agreement
- Select the Com Port to which the touch interface is connected and Next
- Select **Next,** the driver will now start to install.
- Select **YES** - To continue
- Select **Finish**
- Remove the CD.
- Select **YES** to Restart.
- When the system restarts touch each of the 3 targets as directed.
- If the unit does not respond to your calibration touches then you have probably selected the wrong COM port. If so, press the Esc key to exit.
- Go to the ELO icon under Windows Control Panel.
- Select the correct Com port, and restart the computer.
- Once restarted, select the ELO icon under Windows Control Panel
- Select **Align and Calibrate**; then touch each of the 3 targets as directed.
- You are now ready to use your touch screen.

Note 1: The touch screen calibration information is maintained in the computer. If you change computers, you will need to reinstall the touch screen driver software and recalibrate.

Note 2: If for any reason the touch screen performance is unsatisfactory, you can recalibrate at any time. This is done from the ELO icon under the Windows control panel

VICPAS
HMI Parts Center

Touch Screen Driver Installation for *Windows XP*

Required items to **know** or **have** to install the Touch Driver.

- What Operating System you are using. **Windows XP**
- What Serial Port you are connected to. **Usually COM 1 or COM 2**
- The type of touch screen. **Smartset**
- The CD-ROM or Floppy disk included with the system.

Touch Screen Driver Installation for Windows XP

- Insert the provided CD
- Select Link to XP driver
- Select **Open** from the Windows dialog box.
- Select Yes - To the license agreement
- Select the Com Port to which the touch interface is connected and Next
- Select **Next,** the driver will now start to install.
- Select **YES** - To continue
- Select **Finish**
- Remove the CD
- Select **YES** to Restart
- Go to the ELO icon under Windows Control Panel.
- Verify the Com Port is correct
- Select **Align**; then touch each of the 3 targets as directed.
- If the unit does not respond to your calibration touches then you have probably selected the wrong COM port. If so, press the Esc key to exit.
- Select the correct Com port, and restart the computer, then align the touchscreen.
- You are now ready to use your touch screen.

Note 1: The touch screen calibration information is maintained in the computer. If you change computers, you will need to reinstall the touch screen driver software and recalibrate.

Note 2: If for any reason the touch screen performance is unsatisfactory, you can recalibrate at any time. This is done from the ELO icon under the Windows control panel

5 Section Mounting Instructions

Panel Mounting Procedure

1. Cut and drill the panel (refer to Figure 2; Panel Mount Drawing). Measurements are in inches. A template of the hole pattern has been supplied with your monitor to assist in making the mounting holes accurately. Also, there is an AutoCad .dxf file included on the provided CD. This computer file can be used in a design drawing or forwarded to your panel fabricator for the proper mounting

2. If access to the side of the monitor is not available following installation, attach the power and video cables to the side of the monitor at this time.
3. Install the monitor in the prepared cutout.
4. Install the washers and lock nuts supplied with the monitor.
   Note: Use #10-32 nuts for mounting.
5. Tighten all mounting nuts evenly to a torque of 24 inch-pounds.

ATTENTION: Mounting nuts must be tightened to a torque of 24 inch-pounds to provide panel seal and avoid potential damage. AutomationDirect.com assumes no responsibility for water or chemical damage to the monitor or other equipment within the enclosure due to improper installation.

6. Attach the power, video and touch screen cables (if this is a –TS unit) to the side of the monitor.

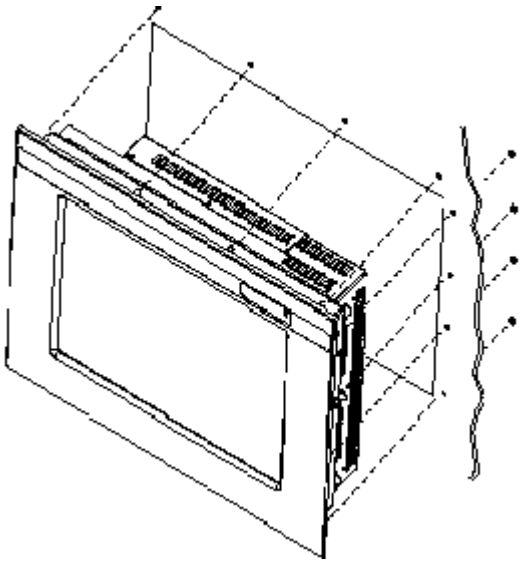

Figure 2: Panel Mount Drawing

VICPAS
HMI Parts Center

6 Troubleshooting Tips

Section

No Picture	Check that the signal cable is properly connected to the display. Try disconnecting the video cable from the display and connecting to another display if available to confirm the presence of proper video. Make sure power is connected to the proper AC source. Make sure the resolution mode is supported by the display and check display settings of the PC Confirm that the video cable is not defective.

Image Persistence	Image persistence occurs when a ghost of an image remains on the screen after the screen image has been changed. Unlike a CRT monitor, an LCD monitor's image persistence is not permanent. To erase an image ghost, turn the monitor off for several hours. What happens is the the liquid crystals after extened periods of operation with take a "set". To avoid this condition, install a screen saver progam on the computer

Picture Quality & Image Stability	Check for proper video cable for proper grounding and shielding. Check the signal source for proper signal. Check for proper adjustment of the Phase and Frequency controls. Check for proper recommended signal timing.

VICPAS
HMI Parts Center

Green LED not lit	Check for proper power and power connections

Display image is not properly sized	Press the “Select” button to Auto Adjust the display Adjust the Vertical and Horizontal size controls via the OSD. (Reference setup adjustments) Ensure that a supported mode is selected on the display card or system being used. Consult the display card or system manual for proper video.

Image will not adjust	Video timing outside of range. Use the on-screen menu to adjust the Clock Setting. Make sure timing is within VESA standard.

Slight distortion in text or Graphics	Not working in native resolution.

Display is present but “bars” Appear or roll across screen	Ground loop problem between computer and display Interference from adjacent equipment.

Vertical shaded bars on Screen image	Horizontal size not properly adjusted. Adjust horizontal size

Image is not stable.	Monitor has incorrect or bad sync signals.. Check for proper video cable installation. Replace suspected faulty cable. Check to ensure that video source is within the display’s operating range.

VICPAS
HMI Parts Center

7 Cleaning & Maintenance

Section

Cleaning

CAUTION: SHUT OFF YOUR TOUCH SCREEN BEFORE CLEANING!!

IF YOUR DISPLAY IS A –TS MODEL, THAT IS A TOUCH SCREEN DISPLAY, THE SCREEN WILL BE ACTUATED BY CLEANING. PRESSING ON THE SCREEN WHILE CLEANING WILL BE SEEN AS A TOUCH TO THE SYSTEM WHICH COULD CREATE A POTENTIALLY DANGEROUS CONDITION!!

Occasionally clean the display panel and cabinet with a soft cloth dampened (not soaked) with a mild (non-abrasive) glass cleaner. Keep turning a fresh side of the cloth toward the screen surface to avoid scratching it with accumulated grit.

Note: The solvent should be applied only to the cloth, and not directly on the monitor screen.

Do not use paper products as they may scratch the surface. To minimize the risk of abrasion, allow the screen to air dry. Special care should be taken when cleaning a touch screen or polycarbonate shield that is installed over the screen. Abrasive and certain chemical cleaners can damage the surface.
Never use alcoholic or ammoniac cleaners to clean the polycarbonate shield or a touch screen.

Replacing a Line Cord

To avoid shock and fire hazards, the monitor's power cord should be replaced if the insulation becomes broken or if it develops a loose internal connection.

Other Maintenance

Qualified service personnel should perform all maintenance, except for the power cord replacement described above.

VICPAS
HMI Parts Center

8 Appendices

Section

Appendix A – Video Pin Assignments

Pin assignments for the HD15 video connector

Pin 1	Red Video	Pin 9	No Connection
Pin 2	Green Video	Pin 10	Sync Ground
Pin 3	Blue Video	Pin 11	Not Used
Pin 4	Not Used	Pin 12	Bi-Directional Data
Pin 5	Return	Pin 13	Horizontal Sync
Pin 6	Red Video Ground	Pin 14	Vertical Sync
Pin 7	Green Video Ground	Pin 15	Data Clock (SCL)
Pin 8	Blue Video Ground		

Appendix B – RS-232 Pin Assignments

Pin assignment for 9 Pin Optional Touch Screen Connector

Pin 1	DCD	Data Carrier Detect
Pin 2	RD (Rx)	Receive Data
Pin 3	SD (Tx)	Transmit Data
Pin 4	DTR	Data Terminal Ready
Pin 5	SB	Signal Ground
Pin 6	DSR	Data Set Ready
Pin 7	RTS	Request to Send
Pin 8	CTS	Clear to Send
Pin 9	NC	No Connection

VICPAS
HMI Parts Center

Appendix C –General Specifications

FPM-150 & FPM-150-TS

Bold - Indicates Up Dated Specification

Active Screen Area	14.14" x 11.31"
Brightness	**450 Nit**
Contrast	300:1
Lamp Life	35K
Screen Resolutions	VGA-SXGA
Native Resolution (Best Picture)	SXGA
View Angle L / R	70 / 70
View Angle Up / Dn	55 / 65
Input Voltage	90-264 VAC Auto-switching
Input power	25W
Current Draw	.20 /120VAC
Installed Depth	2.68”
Chassis Construction	16 Ga SS
Bezel Construction	Al Machined .250"
Bezel OD	17.56”x14.56”
Bezel Finish	Black Textured
Auto Adjust	Yes
5 Wire Touch	Yes
Recessed Cable Exit	Yes
Video Interface	VGA (HD-15F)
Colors	24bit (16M)
Operating Temp	0-50
Storage Temp	0-60
Storage Humidity	10-95
NEMA Front End	4/12

VICPAS
HMI Parts Center

Appendix D – Mounting Dimentions

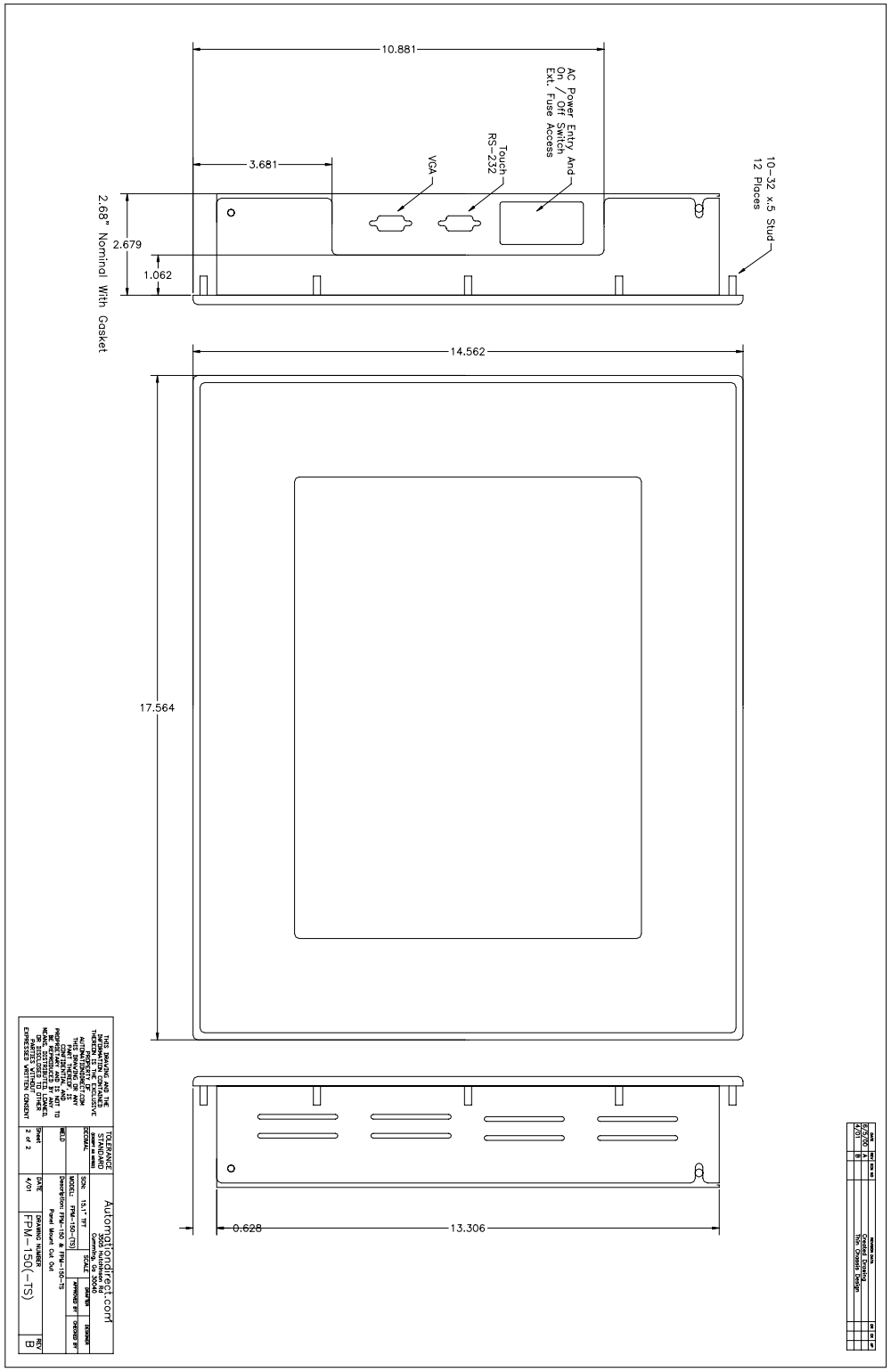

DATE	REV	ECN NO	REVISION DATA	BY	CK	AP
6/5/00	A		Created Drawing			
4/01	B		Thin Chassis Design			

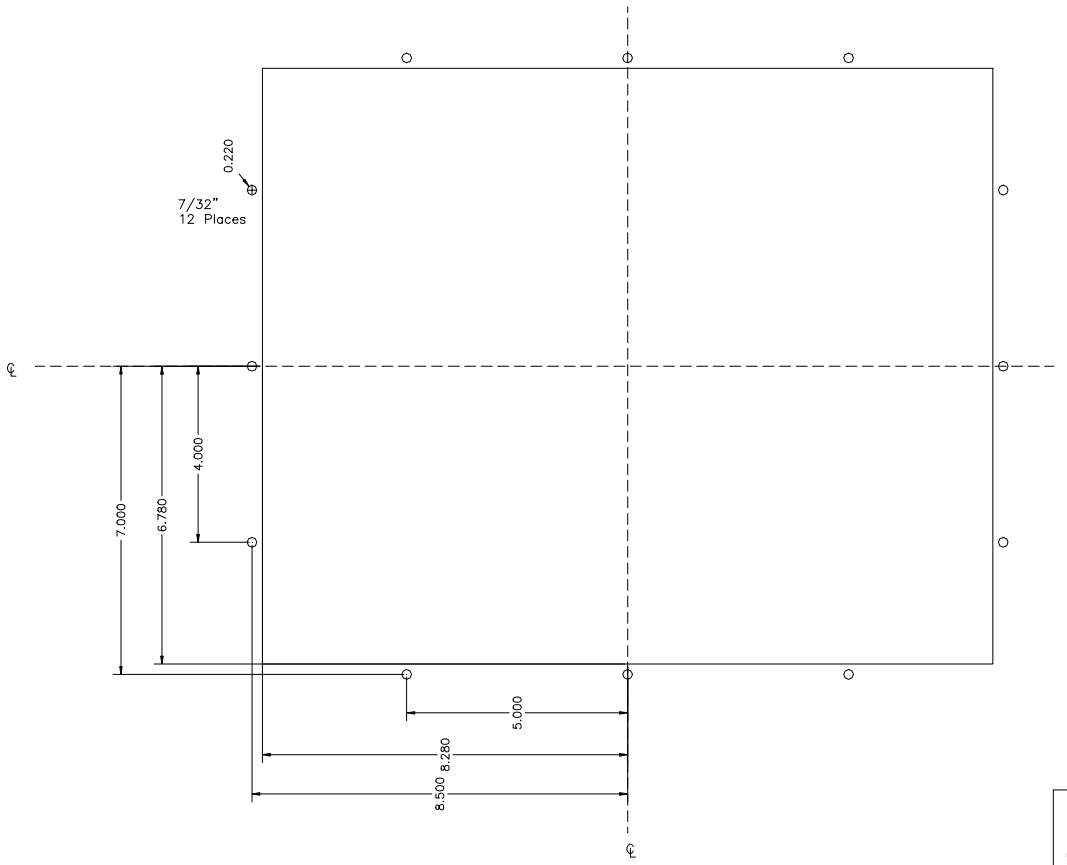

THIS DRAWING AND THE INFORMATION CONTAINED THEREON IS THE EXCLUSIVE PROPERTY OF AUTOMATIONDIRECT.COM THIS DRAWING OR ANY PART THEREOF, IS CONFIDENTIAL AND PROPRIETARY, AND IS NOT TO BE REPRODUCED IN ANY MEANS, DISTRIBUTED, LOANED, OR DISCLOSED TO OTHER PARTIES WITHOUT EXPRESSED WRITTEN CONSENT

TOLERANCE STANDARD (EXCEPT AS NOTED)	Automationdirect.com 3505 Hutchinson Rd Cumming, Ga 30040		
DECIMAL	SCN: 15.1" TFT	SCALE	DRAFTER / DESIGNER
	MODEL: FPM-150-(TS)		APPROVED BY / CHECKED BY
WELD	Description: FPM-150 & FPM-150-TS Panel Mount Cut Out		
Sheet 1 of 2	DATE 4/01	DRAWING NUMBER FPM-150-TEMPLET	REV B

VICPAS
HMI Parts Center

NOTES

Model Number: _____

Serial Number: _____

VICPAS
HMI Parts Center

FPM-170
FPM-170-TS

LCD Monitor User Guide

Revised 12/02

VICPAS
HMI Parts Center

FPM-170 & FPM-170-TS

Table Of Contents

Section 1 Introduction
About LCD Monitors
Product Safety Precautions

Section 2 Display Setup
Included Parts
Connecting Your Display

Section 3 Getting Started
Display Features
Getting Started
Adjusting the Display
Using the Auto-Adjust
OSD (On Screen Display) Adjustments

Section 4 Touch Screen Set up
Introduction to Touch Screens
Touch Screen Driver Installation
- Windows 98
- Windows NT 4.0
- Windows 2000
- Windows XP

Section 5 Mounting Instructions

Section 6 Trouble Shooting Tips

Section 7 Cleaning and Maintenance

Section 8 Appendices
A-VGA Pin Assignment
B-RS-232 Pin Assignment
C-DVI [Digital video Interface] Pin Assignments
D-S-Video
E-NTSC
F-General Specifications
G-Mounting Dimensions

VICPAS
HMI Parts Center

1 LCD Introduction

Section

About LCD Monitors

What you gain by using an LCD monitor for your industrial display is the future of display technology. CRTs although they have dropped in cost significantly, do not offer the performance, reliability, and mounting options available with LCDs. LCD monitors consist primarily of an LCD, video board and a backlight. The LCD determines to a large extent the viewing angle, brightness and contrast. Beyond that it is the function of the video board, which converts the analog RGB (Red, Green, Blue) signals from a standard video card to a high quality, digital RGB that the LCD can display.

LCD monitors can can be set for one or more of the following resolutions:

VGA: 640 x480
SVGA: 800x600
XGA 1024 x 768
SXGA 1280 x1024
UXGA 1600x 1200

Note: The VGA acronym stands for Video Graphics Adapter. It is used to describe both the most common type of display interface used by PC's and lowest resolution setting for this interface. Originally only the VGA [640x480] resolution was available on a VGA interface. Today all of the above interfaces are available on a VGA interface, but not all monitors support all resolutions. . The native resolution of the LCD is normally the maxium resolution that the LCD can display, and is the resolution that the LCD will exhibit the best display charastics Check the monitor specifications (Appendix F) for the resolutions supported by this monitor.

Recently the video card has taken on a new role. It is the responsibility of this device to "scale" a particular video resolution to the "native" resolution of the LCD. This enables a computer set to output a VGA [640x480] resolution signal to be properly displayed on an XGA [1024x768] LCD screen. Without the scaling engine, the displayed picture would be in the center $^{1}/_{3}$ of the LCD. The scaling engine mathematically converts the 640x480 to 1024x768. This my sound simple but it is in fact a complex algorithm that adjusts for different aspect ratios and pixel alignment, essentially smoothing text and graphics to produce a picture that is pleasant to the eye.

All Automationdirect.com displays from 12.1" (800x600) to 18.1" (1280x1024) incorporate scaling engines in the converter card.

VICPAS
HMI Parts Center

Safety Precautions

CAUTION: SHUT OFF YOUR TOUCH SCREEN BEFORE CLEANING!!

IF YOUR DISPLAY IS A –TS MODEL, THAT IS A TOUCH SCREEN DISPLAY, THE SCREEN WILL BE ACTUATED BY CLEANING. PRESSING ON THE SCREEN WHILE CLEANING WILL BE SEEN AS A TOUCH TO THE SYSTEM WHICH COULD CREATE A POTENTIALLY DANGEROUS CONDITION!!

- Do not attempt to service this display yourself. The rear chassis has a seal so that non qualified personal will not expose themselves to dangerous voltages or other risks.
- To protect from electrical shock, unplug the display power supply from the wall before moving.
- Do not use this display near water
- Do not place any heavy objects on the power cords. Damage may cause electrical shock.
- Unplug the power supply from the wall or unit if one of the following conditions exists.
  - Power cord or plug is damaged or frayed
  - Liquid is spilled into the display or the display is exposed to rain or water.
  - The display does not operate normally when the operating instructions are followed.
  - The display has been dropped or the enclosure has been damaged.
  - The display exhibits a distinct change in performance, indicating a need for service.
- Ensure that sufficient space is available around the display to provide air circulation for cooling.
- Ensure that the ambient air temperature will not exceed the specified maximum temperature.
- Do not expose the display to direct sunlight or heat.

2 Section Display Setup

Included Parts

Your LCD monitor package will consist of the primary components listed below.

Open shipping container and lay all components on a flat clean surface.

- FPM-170(-TS) LCD Monitor
- 6 ft Video Cable
- 6 Ft AC Power Cable
- 6 ft RS232 Touch Interface Cable (touch screen units only)
- 10-32 Mounting Hardware. (For use with Panel Mount)
- Documentation and Driver CD ROM

Connecting Your Display

1. Connect all cables to the computer first. This includes the VGA cable, and if the unit has a touch screen, the RS 232 serial touch screen connection.
2. After connecting the cables between the LCD monitor and the computer, plug supplied AC power cord into a suitable AC outlet then into the LCD.
3. Power on the display. The On/Off switch is located where the AC power cord enters the unit
4. If your computer is off, turn on your computer.
5. Your display should now operate as a normal computer display, displaying the computers BIOS screens and booting into Windows or other operating system.

Note: If for any reason the display goes blank and/or displays “out of Range” or “No Input Signal” message on the screen, your computer or video source may be putting out a signal that is incompatible with the FPM-170(-TS). If this happens, reboot the computer with the previous display and adjust the display settings to be within the FPM-170(-TS) specifications (see Appendix F). Below is are the most common reasons a display may not operate correctly:

1. The resolution is to high or low for the LCD.
2. The refresh rate is set to high. Refresh on an LCD is different than a CRT. Set the refresh to 60Hz. CRT’s need a high refresh rate to avoid flicker. The refresh rate has no impact on an LCD.
3. The power source is incorrect, or there is no power. Check if the rear LED is ON or blinking. If the LED is not lit, check to be sure there is power to the unit.
4. The unit is malfunctioning. If you believe this to be true, disconnect the video cable from the rear of the LCD and connect to a known good display. If the computer display is working satisfactory and the video is within the appropriate range, then contact AutomationDirect.com technical support.

VICPAS
HMI Parts Center

3 Getting Started

Section

Display Features

- The FPM-170(-TS) is capable of displaying 16M (24 Bit) colors in a continuous spectrum. The high contrast LCD enhances the image with no geometric distortion.
- FPM-170(-TS) Series directly accepts an analog 5 wire RGB with separate H/V (Horizontal / Vertical) sync. This is the standard PC video signal.The FPM-170(-TS) Series is auto synchronous, adjusting the display to the appropriate input between VGA and SXGA.
- The FPM-170(-TS) Series is supplied with a Anti-Glare Touch Screeen [TS models] or an Anti-Glare impact window on non touch screen models.
- The FPM-170(-TS) Series has an integrated 115/220VAC power supply as standard on all models.

Adjusting the Display

The FPM-170(-TS) Series display has an embedded microprocessor on the converter card [the electronics that drive the LCD], and has been recently updated with a more powerful chip set. In most cases the unit will require very little if any user intervention to operate correctly. That is, produce a sharp, stable picture.

The micoprocessor in the display has the capability to adjust itself to the computer to which it is attached. This auto-adjustment will take place when the unit is first installed and connected to a computer, if the video input changes, or the user initates it. If the picture is not satisfactory, the first step is to allow the unit to attempt to re-adjust itself to your computer.

Located on the rear of the unit is a membrane keypad used for adjusting the display. See figure 1 below:

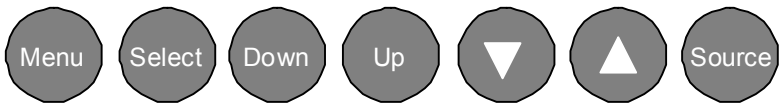

Figure 1

VICPAS
HMI Parts Center

Using the Auto-Adjust

The FPM-170(-TS) will attempt to adjust itself to your computers current video model. If the picture is stable, and centered vertically and horizontally the auto-adjustment is complete. If however the picture is not stable, and centered vertically and horizontally you can re-initate the auto adjustment. Once you have the unit displaying the resolution you desire for your application, do the following:

Press HOLD and release the “Select” button on the membrane. This will place the unit into a “Geometry Auto Adjust” mode. This operation will adjust the picture so it is centered both vertically and horizontally on the LCD screen. It will also make the necessary adjustments to the internal clock timing so that the picture is stable (without any decernable pixel jitter).

After having completed this step you may wish to adjust the color balance. This procedure adjusts for any imbalance in the Red, Green, and Blue levels from the video cable or video card. This is accomplished using the LCDs OSD (On Screen Menu) system.

OSD (On Screen Display) Adjustments

There are four membrane buttons (see Fig 1, above) located on the rear of the unit. They will activate the OSD and allow navigation to all adjustments the unit may require.

Press MENU key, OSD screen appears. [See Figure 2]

Press the UP/DOWN key to move between the five primary functions. (Indicated by highlighting) Press the Select key when highlighting the Picture group to activate this sub-menu. You can now navigate the sub-menu using the UP/DOWN keys. To make an adjustment to an item use the ▼ ▲ buttons to make your adjustments

At anytime, press the Menu button two times to Exit and Save your settings.
This convention of Menu, Navigate, Select Sub Menu, Navigate, Select Item and Adjust item is used throughout the OSD screen set up.

Press MENU key to return previous state and press MENU key twice to exit OSD.

VICPAS
HMI Parts Center

PICTURE

Press MENU key to bring up the OSD. Press UP/DOWN key to move between the 5 primary screen functions. Press the Select button at Picture, to select it. Press the UP/DOWN key, you can now move between functions and press Select to adjust the value of each item with the ▼ ▲ key. Press MENU key to return previous state and press MENU key twice to exit OSD.

- BRIGHTNESS Function of adjusting main screen brightness.
- CONTRAST Function of adjusting main screen contrast.
- FREQUENCY Function of adjusting main screen sampling clock frequency.
- PHASE Function of adjusting main screen sampling clock phase.
- H POSITION Function of adjusting the horizontal position of main screen.
- V POSITION Function of adjusting the vertical position of main screen.

ADVANCED

Press MENU key to bring up the OSD. Press UP/DOWN key, to move between the 5 primary screen functions. Press the Select button at Advanced, to select it. Press the UP/DOWN key, you can now move between functions and press Select to adjust the value of each item with the▼ ▲ key. Press MENU key to return previous state and press MENU key twice to exit OSD.

- Color Temp Function of setup of main color. (Bluish, Normal, Reddish)
- User RED Function of adjusting value of RED.
- User BLUE Function of adjusting value of BLUE.
- User GREEN Function of adjusting value of GREEN.
- Gamma Function of adjusting value of color ratio.

COLOR WARP

Press MENU key to bring up the OSD. Press UP/DOWN key to move between the 5 primary screen functions. Press the Select button at Color Warp, to select it. Press the UP/DOWN key, you can now move between functions and press Select to adjust the value of each item with the ▼ ▲ key. Press MENU key to return previous state and press MENU key twice to exit OSD

- Color Warp Function of adjusting curve on main screen.
- Mode Function of selecting curve on main screen.
- Custom Center Function of adjusting color warp on center.
- Custom range Function of adjusting range on color warp.
- Saturation Function of adjusting saturation warp on center.
- Custom hue Function of adjusting the tone of color.

OPTIONS

Press MENU key to bring up the OSD. Press UP/DOWN key to move between the 5 primary screen functions. Press the Select button at Options, to select it. Press the UP/DOWN key, you can now move between functions and press Select to adjust the value of each item with the ▼ ▲ key. Press MENU key to return previous state and press MENU key twice to exit OSD

- OSD V Pos Function of adjusting the vertical position of OSD image.
- OSD H Pos Function of adjusting the horizontal position of OSD image.
- OSD Function of moving OSD image quickly.

UTILITIES

Press MENU key to bring up the OSD. Press UP/DOWN key to move between the 5 primary screen functions. Press the Select button at Utilities, to select it. Press the UP/DOWN key, you can now move between functions and press Select to adjust the value of each item with the▼ ▲ key. Press MENU key to return previous state and press MENU key twice to exit OSD

- OSD Timeout Function of adjusting OSD disappear time.
- OSD Bkground Function of adjusting at transparency on main screen to OSD image.
- Auto Adjust Function of finding optimized main screen automatically.
- Factory Reset Function of resetting all value on OSD.
- Power On Time Function of indicating system on time.
- Bklight OnTime Function of indicating panel on time.

NOTE: The OSD membrane has a Source button. This button is used to select other inputs to the LCD, Such as DVI, S-Video, or NTSC.

VICPAS
HMI Parts Center

4 Touch Screen Setup

Section

Introduction to Touch Screens

Touch screen interfaces have become the standard interface in the past 5 years. They are, rugged, reliable, extremely flexible and easier than ever to implement! The universal acceptance of the Windows GUI [Graphical User Interface] along with the extensive use of a mouse interface has significantly accelerated the use of a touch interface. Basically think of your touch screen as if it were a mouse.

AutomationDirect.com touch systems are mouse emulators. By installing a software driver and connecting to a serial port, the touch screen will support all the primary mouse functions:

The FPM-170(-TS) touch screen interface, is a high resolution, analog resistive. Following is a quick explanation of what all this means.

High Resolution: The touch screen resolution is 400 ppi [points per inch]

Analog Resistive: The actual touch glass is an analog device. Meaning there is a very low voltage applied to the X and Y axis of the touch screen. This current is applied to ITO [Iridium Tin Oxide] that is sputtered onto a polyester membrane. When you touch the screen you are changing the resistance on both the X and Y axis, producing an analog value that references a particular location.
This type of screen can be activated with a gloved finger or mechanical stylus.

The touch screen itself is connected to electronics [internal to the display unit] that provide the Analog to Digital conversion. When the screen is touched, the electronics convert the analog voltage to a digital value and add a "Mouse Click". This touch data is sent out from the display serial port to the PC serial port where the touch driver presents the data to the operating systems as if it were from a normal PC mouse. When the touch is released the new XY location is sent along with a "Mouse Up Click".

The touch screen interface to the PC is RS-232, so the recommend maximum distance from the PC is 50 feet., The driver and and interface have been tested to 50 Ft. using high quality cables. High quaility cables and connectors are important, especially if field connections are made. Poor quality cables will drastically reduce the performance of the RS-232 interface. The touch driver default baud rate is 9600.

Touch Screen Setup and Configuration:

If the unit does not have a touch screen, your configuration is complete. If your display is fitted with the optional touch screen interface, the following section will outline installation and set up. This system requires no special software knowledge, and can be installed and set up in minutes. The following section gives a detailed explanation of the software setup and configuration

VICPAS
HMI Parts Center

Touch Screen Driver Installation for *Windows 98*

Required items to **know** or **have** to install the Touch Driver.

- What Operating System you are using. **Windows 98**
- What Serial Port you are connected to. **Usually COM 1 or COM 2**
- The type of touch screen. **Smartset**
- The CD-ROM or Floppy disk included with the system.

Touch Screen Driver Installation for Windows 98

- Insert the provided CD
- Select Link to the Windows 98 driver
- Select **Open** from the Windows dialog box.
- Select **SmartSet** Controller for Com1 or Com2
- Remove the CD.
- Restart the computer; you will be prompted to calibrate the touch screen.
- Touch each of the 3 targets as directed. If the unit does not respond to your calibration touches then you have probably selected the wrong COM port. If so, reinstall the driver and selecting the correct COM port.
- You are now ready to use your touch screen.

Note 1: The touch screen calibration information is maintained in the computer. If you change computers, you will need to reinstall the touch screen driver software and recalibrate.

Note 2: If for any reason the touch screen performance is unsatisfactory, you can recalibrate at any time. This is done from the ELO icon under the Windows control panel

VICPAS
HMI Parts Center

Touch Screen Driver Installation for *Windows NT 4.0*

Required items to **know** or **have** to install the Touch Driver.

- What Operating System you are using. **Windows NT 4.0**
- What Serial Port you are connected to. **Usually COM 1 or COM 2**
- The type of touch screen. **Smartset**
- The CD-ROM or Floppy disk included with the system.

Touch Screen Driver Installation for Windows NT 4.0

- Insert the provided CD
- Select Link to the Windows NT driver
- Select **Open** from the Windows dialog box.
- Select **Next**
- Select **Yes** - To the license agreement
- Select **Next** - To the default installation folder
- Select **Next** - For Single Monitor installation
- Select the Com Port to which the touch interface is connected and **Next**
- Select **Finish**
- Remove the CD.
- Restart the computer. You will be prompted to calibrate the touch screen.
- Touch each of the 3 targets as directed. If the unit does not respond to your calibration touches then you have probably selected the wrong COM port. If so, press the Esc key on the keyboard to exit.
- Go to the ELO icon under Windows Control Panel.
- Select the correct Com Port, and Restart the computer.
- If this fails, reinstall the driver and select the correct COM port
- Once restarted, select the ELO icon under Windows Control Panel
- Select **Calibrate**, and then touch each of the 3 targets as they are displayed.
- You are now ready to use your touch screen.

Note 1: The touch screen calibration information is maintained in the computer. If you change computers, you will need to reinstall the touch screen driver software and recalibrate.

Note 2: If for any reason the touch screen performance is unsatisfactory, you can recalibrate at any time. This is done from the ELO icon under the Windows control panel

VICPAS
HMI Parts Center

Touch Screen Driver Installation for *Windows 2000*

Required items to **know** or **have** to install the Touch Driver.

- What Operating System you are using. **Windows 2000**
- What Serial Port you are connected to. **Usually COM 1 or COM 2**
- The type of touch screen. **Smartset**
- The CD-ROM or Floppy disk included with the system.

Touch Screen Driver Installation for Windows 2000

- Insert the provided CD
- Select Link to Windows 2000 driver
- Select **Open** from the Windows dialog box.
- Select **Next**
- Select **Yes** - To the license agreement
- Select the Com Port to which the touch interface is connected and Next
- Select **Next,** the driver will now start to install.
- Select **YES** - To continue
- Select **Finish**
- Remove the CD.
- Select **YES** to Restart.
- When the system restarts touch each of the 3 targets as directed.
- If the unit does not respond to your calibration touches then you have probably selected the wrong COM port. If so, press the Esc key to exit.
- Go to the ELO icon under Windows Control Panel.
- Select the correct Com port, and restart the computer.
- Once restarted, select the ELO icon under Windows Control Panel
- Select **Align and Calibrate**; then touch each of the 3 targets as directed.
- You are now ready to use your touch screen.

Note 1: The touch screen calibration information is maintained in the computer. If you change computers, you will need to reinstall the touch screen driver software and recalibrate.

Note 2: If for any reason the touch screen performance is unsatisfactory, you can recalibrate at any time. This is done from the ELO icon under the Windows control panel

VICPAS
HMI Parts Center

Touch Screen Driver Installation for *Windows XP*

Required items to **know** or **have** to install the Touch Driver.

- What Operating System you are using. **Windows XP**
- What Serial Port you are connected to. **Usually COM 1 or COM 2**
- The type of touch screen. **Smartset**
- The CD-ROM or Floppy disk included with the system.

Touch Screen Driver Installation for Windows XP

- Insert the provided CD
- Select Link to XP driver
- Select **Open** from the Windows dialog box.
- Select Yes - To the license agreement
- Select the Com Port to which the touch interface is connected and Next
- Select **Next,** the driver will now start to install.
- Select **YES** - To continue
- Select **Finish**
- Remove the CD
- Select **YES** to Restart
- Go to the ELO icon under Windows Control Panel.
- Verify the Com Port is correct
- Select **Align**; then touch each of the 3 targets as directed.
- If the unit does not respond to your calibration touches then you have probably selected the wrong COM port. If so, press the Esc key to exit.
- Select the correct Com port, and restart the computer, then align the touchscreen.
- You are now ready to use your touch screen.

Note 1: The touch screen calibration information is maintained in the computer. If you change computers, you will need to reinstall the touch screen driver software and recalibrate.

Note 2: If for any reason the touch screen performance is unsatisfactory, you can recalibrate at any time. This is done from the ELO icon under the Windows control panel

5 Section Mounting Instructions

Panel Mounting Procedure

Cut and drill the panel (refer to Figure 2; Panel Mount Drawing Appendix G). Measurements are in inches. A template of the hole pattern has been supplied with your monitor to assist in making the mounting holes accurately. Also, there is an AutoCad .dxf file included on the provided CD. This computer file can be used in a design drawing or forwarded to your panel fabricator for the proper mounting

1. If access to the side of the monitor is not available following installation, attach the power and video cables to the side of the monitor at this time.
2. Install the monitor in the prepared cutout.
3. Install the washers and lock nuts supplied with the monitor.
   Note: Use #10-32 nuts for mounting.
4. Tighten all mounting nuts evenly to a torque of 24 inch-pounds.

ATTENTION: Mounting nuts must be tightened to a torque of 24 inch-pounds to provide panel seal and avoid potential damage. AutomationDirect assumes no responsibility for water or chemical damage to the monitor or other equipment within the enclosure due to improper installation.

6. Attach the power, video and touch screen cables (if this is a –TS unit) to the side of the monitor.

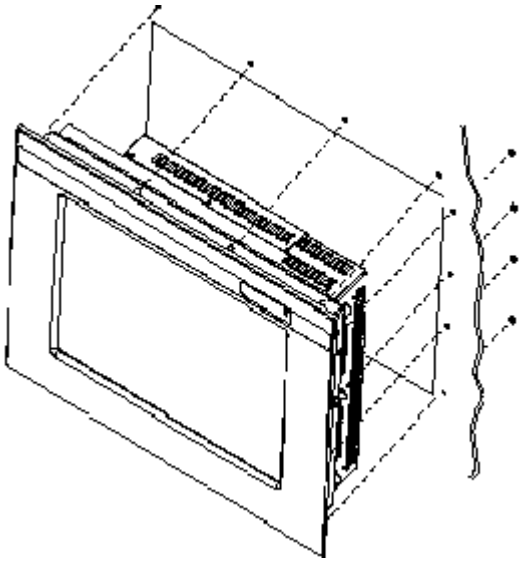

Figure 2: Panel Mount Drawing

VICPAS
HMI Parts Center

6 Troubleshooting Tips

Section

No Picture	Check that the signal cable is properly connected to the display. Try disconnecting the video cable from the display and connecting to another display if available to confirm the presence of proper video. Make sure power is connected to the proper AC source. Make sure the resolution mode is supported by the display and check display settings of the PC Confirm that the video cable is not defective.

Image Persistence	Image persistence occurs when a ghost of an image remains on the screen after the screen image has been changed. Unlike a CRT monitor, an LCD monitor's image persistence is not permanent. To erase an image ghost, turn the monitor off for several hours. What happens is the the liquid crystals after extened periods of operation with take a "set". To avoid this condition, install a screen saver progam on the computer

Picture Quality & Image Stability	Check for proper video cable for proper grounding and shielding. Check the signal source for proper signal. Check for proper adjustment of the Phase and Frequency controls. Check for proper recommended signal timing.

VICPAS
HMI Parts Center

Green LED not lit	Check for proper power and power connections

Display image is not properly sized	Press the “Select” button to Auto Adjust the display Adjust the Vertical and Horizontal size controls via the OSD. (Reference OSD Adjustments section) Ensure that a supported mode is selected on the display card or system being used. Consult the display card or system manual for proper video.

Image will not adjust	Video timing outside of range. Use the on-screen menu to adjust the Clock Setting. Make sure timing is within VESA standard.

Slight distortion in text or Graphics	Not working in native resolution.

Display is present but “bars” Appear or roll across screen	Ground loop problem between computer and display Interference from adjacent equipment.

Vertical shaded bars on Screen image	Horizontal size not properly adjusted. Adjust horizontal size

Image is not stable.	Monitor has incorrect or bad sync signals.. Check for proper video cable installation. Replace suspected faulty cable. Check to ensure that video source is within the display’s operating range.

VICPAS
HMI Parts Center

7 Cleaning & Maintenance

Section

Cleaning

CAUTION: SHUT OFF YOUR TOUCH SCREEN BEFORE CLEANING!!

IF YOUR DISPLAY IS A –TS MODEL, THAT IS A TOUCH SCREEN DISPLAY, THE SCREEN WILL BE ACTUATED BY CLEANING. PRESSING ON THE SCREEN WHILE CLEANING WILL BE SEEN AS A TOUCH TO THE SYSTEM WHICH COULD CREATE A POTENTIALLY DANGEROUS CONDITION!!

Occasionally clean the display panel and cabinet with a soft cloth dampened (not soaked) with a mild (non-abrasive) glass cleaner. Keep turning a fresh side of the cloth toward the screen surface to avoid scratching it with accumulated grit.

Note: The solvent should be applied only to the cloth, and not directly on the monitor screen.

Do not use paper products as they may scratch the surface. To minimize the risk of abrasion, allow the screen to air dry. Special care should be taken when cleaning a touch screen or polycarbonate shield that is installed over the screen. Abrasive and certain chemical cleaners can damage the surface.
Never use alcoholic or ammoniac cleaners to clean the polycarbonate shield or a touch screen.

Replacing a Line Cord

To avoid shock and fire hazards, the monitor's power cord should be replaced if the insulation becomes broken or if it develops a loose internal connection.

Other Maintenance

Qualified service personnel should perform all maintenance, except for the power cord replacement described above.

VICPAS
HMI Parts Center

8 Appendices

Section

Appendix A – Video Pin Assignments

Pin assignments for the HD15 video connector

Pin 1	Red Video	Pin 9	No Connection
Pin 2	Green Video	Pin 10	Sync Ground
Pin 3	Blue Video	Pin 11	Not Used
Pin 4	Not Used	Pin 12	Bi-Directional Data
Pin 5	Return	Pin 13	Horizontal Sync
Pin 6	Red Video Ground	Pin 14	Vertical Sync
Pin 7	Green Video Ground	Pin 15	Data Clock (SCL)
Pin 8	Blue Video Ground		

Appendix B – RS-232 Pin Assignments

Pin assignment for 9 Pin Optional Touch Screen Connector

Pin 1	DCD	Data Carrier Detect
Pin 2	RD (Rx)	Receive Data
Pin 3	SD (Tx)	Transmit Data
Pin 4	DTR	Data Terminal Ready
Pin 5	SG	Signal Ground
Pin 6	DSR	Data Set Ready
Pin 7	RTS	Request to Send
Pin 8	CTS	Clear to Send
Pin 9	NC	No Connection

VICPAS
HMI Parts Center

Appendix C – DVI Video Pin Assignments

Pin 1	TMDS Data 2-	
Pin 2	TMDS Data 2+	
Pin 3	TMDS Data 2/4 Shield	
Pin 4	TMDS Data 4- (NC)	
Pin 5	TMDS Data 4+ (NC)	
Pin 6	DDC Clock	
Pin 7	DDC Data	
Pin 8	NC	
Pin 9	NC	No Connection
Pin 10	TMDS Data 1-	
Pin 11	TMDS Data 1/3 Shield	
Pin 12	TMDS Data 3- (NC)	
Pin 13	TMDS Data 3+ (NC)	
Pin 14	5 V	
Pin 15	Ground	
Pin 16	Hot Plug Detect	
Pin 17	TMDS Data 0-	
Pin 18	TMDS Data 0+	
Pin 19	TMDS Data 0/5 Shield	
Pin 20	TMDS Data 5-	
Pin 21	TMDS Data 5+	
Pin 22	TMDS Clock Shield	
Pin 23	TMDS Clock +	
Pin 23	TMDS Clock -	

Appendix D – S-Video

Pin 1	Ground
Pin 2	Ground
Pin 3	Chroma
Pin 4	Luma

Appendix E – NTSC

Pin 1	Composite Video
Pin 2	Ground

VICPAS
HMI Parts Center

Appendix F –General Specifications

FPM-170 & FPM-170-TS

Bold - Indicates Up Dated Specification

Active Screen Area	13.3" x 10.64"
Brightness	**250**
Contrast	**500:1**
Lamp Life	35K
Screen Resolution	VGA-SXGA
Vertical Frequency Range	50-85 Hz.
Horizontal Frequency Range	15-80 KHz.
PC Video Input	Separate Sync (5 Wire) Composite Sync (4 Wire) Sync On Green (3 Wire)
Video	NTSC / PAL
Native Resolution (Best Picture)	SXGA
View Angle L / R	85 / 85
View Angle Up / Dn	85 / 85
Input Voltage	90-264 VAC Auto-switching
Current Draw	.25 / 120 VAC
Input power	30W
Installed Depth	2.68"
Chassis Construction	16 Ga SS
Bezel Construction	Al Machined .250"
Bezel OD	17.56" x 14.56"
Bezel Finish	Black Textured
Auto Adjust	Yes, on Power Up
Resistive Touch	Yes
5 Wire Touch	Yes
Touch Interface	RS-232 or USB
Recessed Cable Exit	Yes
DVI Interface	DVI-D Standard (Female)
PC Video Interface	VGA (HD-15F) (Female)
S-Video	4 Pin Mini Din (Female)
NTSC	RCA (Female)
Colors	24bit (16M)
Operating Temp	0-50
Storage Temp	0-60
Storage Humidity	10-95
NEMA Front End	4/12

VICPAS
HMI Parts Center

Appendix G – Mounting Dimentions

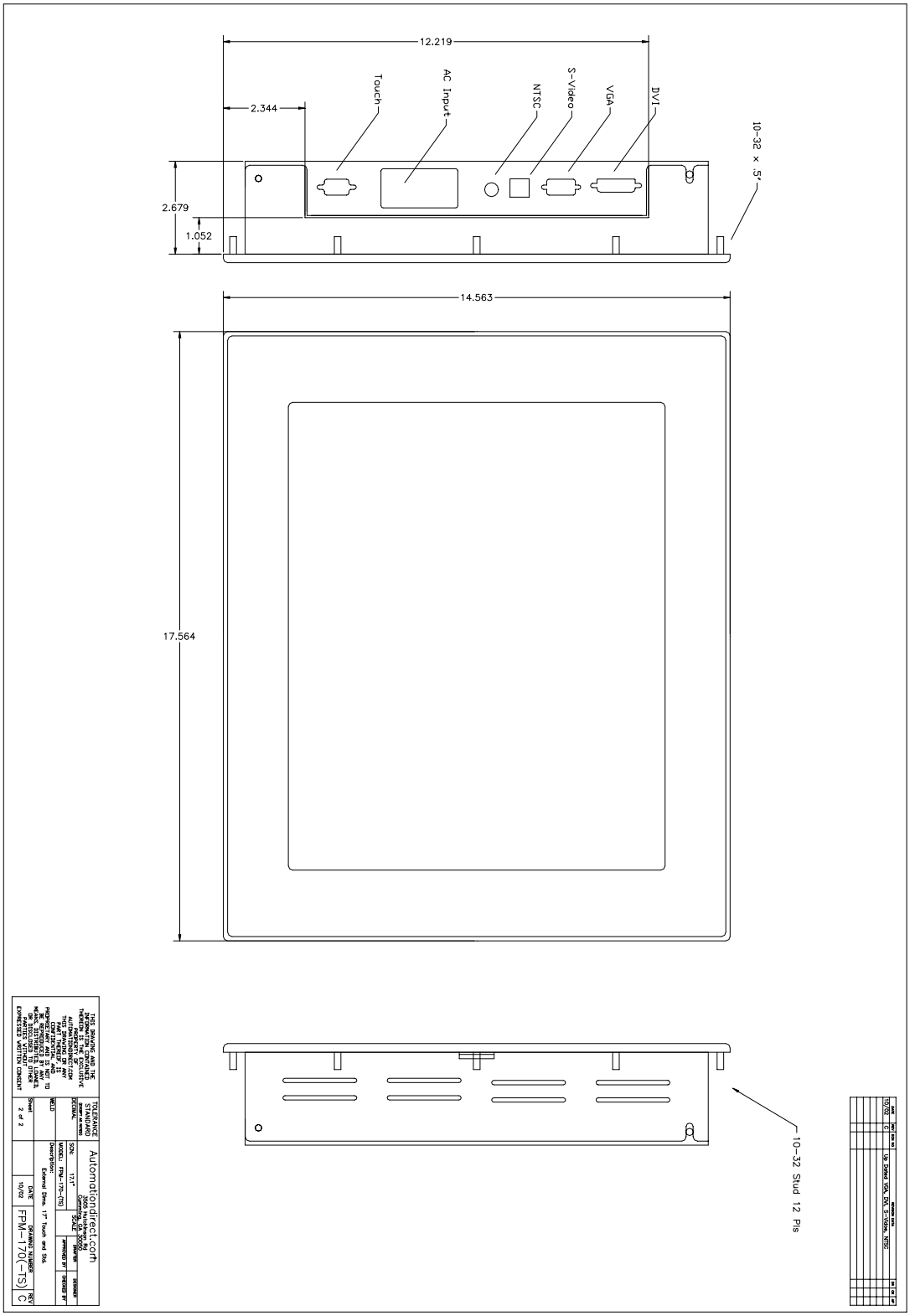

VICPAS
HMI Parts Center

DATE	REV	ECN NO	REVISION DATA	DR	CK	AP
10/02	C		No Change Rev. A, B, C			

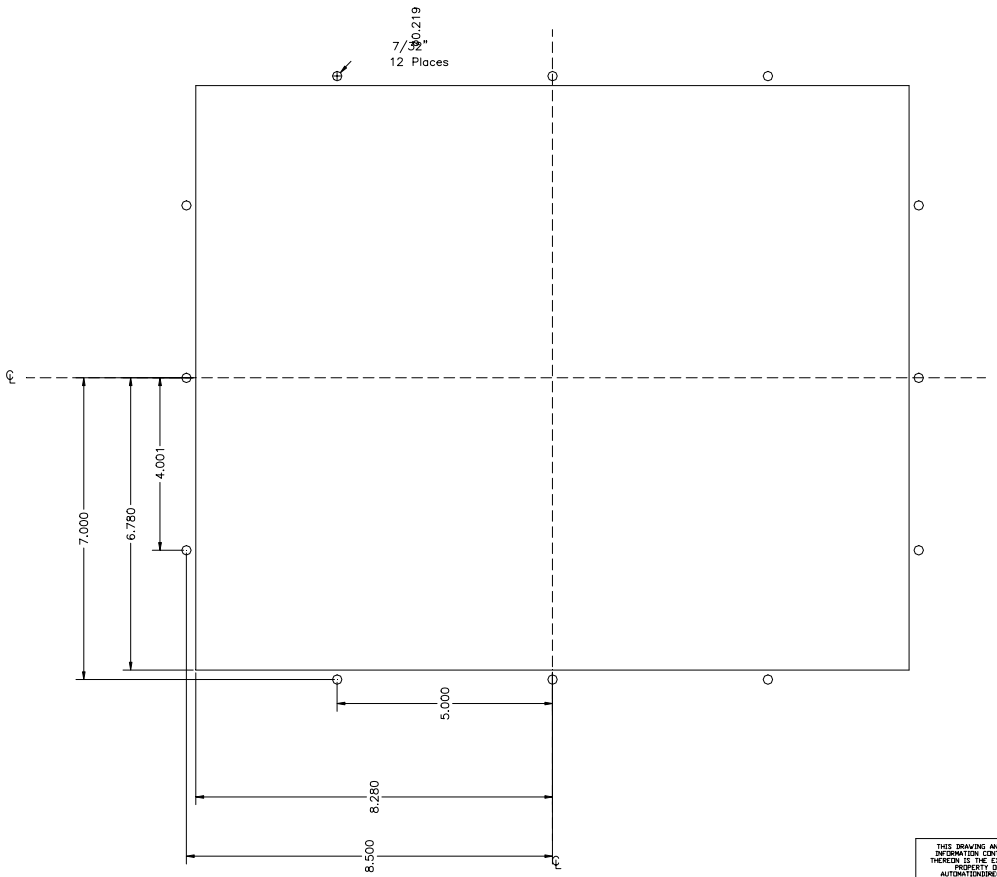

THIS DRAWING AND THE INFORMATION CONTAINED THEREON IS THE EXCLUSIVE PROPERTY OF AUTOMATIONDIRECT.COM THIS DRAWING OR ANY PART THEREOF, IS CONFIDENTIAL AND PROPRIETARY AND IS NOT TO BE REPRODUCED BY ANY MEANS, DISTRIBUTED, LOANED, OR DISCLOSED TO OTHER PARTIES WITHOUT EXPRESSED WRITTEN CONSENT

TOLERANCE STANDARD (EXCEPT AS NOTED)

DECIMAL

WELD

Automationdirect.com
3505 Hutchinson Rd
Cumming, GA 30050

SCN: 17.1"

SCALE

DRAFTER

DESIGNER

MODEL: FPM-170(-TS)

APPROVED BY

CHECKED BY

Description:
External Dims. 17" Touch and Std.

Sheet 1 of 2

DATE 10/02

DRAWING NUMBER FPM-170-TEMPLET

REV C

VICPAS
HMI Parts Center

NOTES

Model Number: _____

Serial Number: _____

Dear Customer:

Thank you for purchasing this flat panel industrial monitor from AutomationDirect.com. The enclosed unit is our newest design and has been enhanced to offer you even more great features. Here's what's new:

Brightness – Screen brightness has been increased to 300 nits from 200 nits.

Contrast – Contrast ratio has been increased to 350:1 from 300:1.

Lamp Life – The backlight half life has been extended to 40,000 hours from 30,000 hours.

Inputs – The unit now accepts DVI (Digital Video Interface), S-Video, and NTSC in addition to the standard VGA.

Auto Adjust – The monitor will now Auto Adjust automatically on power up when it receives a video signal from your computer

Video Scaling – A new scaling engine has been integrated to provide enhanced picture quality in all video modes of the LCD up to the native mode of 1208x1024.

Installed Depth – Unfortunatly the installed depth of the unit has increased slightly to 2 15/16" from 2 9/16"

Power – The electrical demand has increased to 48 Watts [.4a at 120 VAC] from 35 Watts [.3a at 120 VAC]

These enhancements make this flat panel monitor more user friendly and provide a superior picture making your application look even better! Proving again the great value you get from AutomationDirect.com products.

If you have any questions concerning this monitor please feel free to contact us at 1-800-633-0405

Sincerely,

Jim Allison
PC Control Products manager
AutomationDirect.Com
Your source for the most practical automation products at at almost-free pricing, delivered by 11 AM, just by clicking a mouse.

www.AutomationDirect.com
(800) 633-0405

VICPAS
HMI Parts Center

FPM-180
FPM-180-TS

LCD Monitor User Guide

Revised 12/02

VICPAS
HMI Parts Center

FPM-180 & FPM-180-TS

Table Of Contents

Section 1 Introduction
About LCD Monitors
Product Safety Precautions

Section 2 Display Setup
Included Parts
Connecting Your Display

Section 3 Getting Started
Display Features
Getting Started
Adjusting the Display
Using the Auto-Adjust
OSD (On Screen Display) Adjustments

Section 4 Touch Screen Set up
Introduction to Touch Screens
Touch Screen Driver Installation
- Windows 98
- Windows NT 4.0
- Windows 2000
- Windows XP

Section 5 Mounting Instructions

Section 6 Trouble Shooting Tips

Section 7 Cleaning and Maintenance

Section 8 Appendices
A-VGA Pin Assignment
B-RS-232 Pin Assignment
C- DVI [Digital Video Interface] Pin Assignments
D- S-Video
E- NTSC
F-General Specifications
G-Mounting Dimensions

VICPAS
HMI Parts Center

1 LCD Introduction

Section

About LCD Monitors

What you gain by using an LCD monitor for your industrial display is the future of display technology. CRTs although they have dropped in cost significantly, do not offer the performance, reliability, and mounting options available with LCDs. LCD monitors consist primarily of an LCD, video board and a backlight. The LCD determines to a large extent the viewing angle, brightness and contrast. Beyond that it is the function of the video board, which converts the analog RGB (Red, Green, Blue) signals from a standard video card to a high quality, digital RGB that the LCD can display.

LCD monitors can can be set for one or more of the following resolutions:

VGA: 640 x480
SVGA: 800x600
XGA 1024 x 768
SXGA 1280 x1024
UXGA 1600x 1200

Note: The VGA acronym stands for Video Graphics Adapter. It is used to describe both the most common type of display interface used by PC's and lowest resolution setting for this interface. Originally only the VGA [640x480] resolution was available on a VGA interface. Today all of the above interfaces are available on a VGA interface, but not all monitors support all resolutions. . The native resolution of the LCD is normally the maxium resolution that the LCD can display, and is the resolution that the LCD will exhibit the best display charastics Check the monitor specifications (Appendix F) for the resolutions supported by this monitor.

Recently the video card has taken on a new role. It is the responsibility of this device to "scale" a particular video resolution to the "native" resolution of the LCD. This enables a computer set to output a VGA [640x480] resolution signal to be properly displayed on an XGA [1024x768] LCD screen. Without the scaling engine, the displayed picture would be in the center $^1/_3$ of the LCD. The scaling engine mathematically converts the 640x480 to 1024x768. This my sound simple but it is in fact a complex algorithm that adjusts for different aspect ratios and pixel alignment, essentially smoothing text and graphics to produce a picture that is pleasant to the eye.

All Automationdirect.com displays from 12.1" (800x600) to 18.1" (1280x1024) incorporate scaling engines in the converter card.

VICPAS
HMI Parts Center

Safety Precautions

CAUTION: SHUT OFF YOUR TOUCH SCREEN BEFORE CLEANING!!

IF YOUR DISPLAY IS A –TS MODEL, THAT IS A TOUCH SCREEN DISPLAY, THE SCREEN WILL BE ACTUATED BY CLEANING. PRESSING ON THE SCREEN WHILE CLEANING WILL BE SEEN AS A TOUCH TO THE SYSTEM WHICH COULD CREATE A POTENTIALLY DANGEROUS CONDITION!!

- Do not attempt to service this display yourself. The rear chassis has a seal so that non qualified personal will not expose themselves to dangerous voltages or other risks.
- To protect from electrical shock, unplug the display power supply from the wall before moving.
- Do not use this display near water
- Do not place any heavy objects on the power cords. Damage may cause electrical shock.
- Unplug the power supply from the wall or unit if one of the following conditions exists.
  - Power cord or plug is damaged or frayed
  - Liquid is spilled into the display or the display is exposed to rain or water.
  - The display does not operate normally when the operating instructions are followed.
  - The display has been dropped or the enclosure has been damaged.
  - The display exhibits a distinct change in performance, indicating a need for service.
- Ensure that sufficient space is available around the display to provide air circulation for cooling.
- Ensure that the ambient air temperature will not exceed the specified maximum temperature.
- Do not expose the display to direct sunlight or heat.

2 Section Display Setup

Included Parts

Your LCD monitor package will consist of the primary components listed below.

Open shipping container and lay all components on a flat clean surface.

- FPM-180(-TS) LCD Monitor
- 6 ft Video Cable
- 6 Ft AC Power Cable
- 6 ft RS232 Touch Interface Cable (touch screen units only)
- 10-32 Mounting Hardware. (For use with Panel Mount)
- Documentation and Driver CD ROM

Connecting Your Display

1. Connect all cables to the computer first. This includes the VGA cable, and if the unit has a touch screen, the RS 232 serial touch screen connection.
2. After connecting the cables between the LCD monitor and the computer, plug supplied AC power cord into a suitable AC outlet then into the LCD.
3. Power on the display. The On/Off switch is located where the AC power cord enters the unit
4. If your computer is off, turn on your computer.
5. Your display should now operate as a normal computer display, displaying the computers BIOS screens and booting into Windows or other operating system.

Note: If for any reason the display goes blank and/or displays “out of Range” or “No Input Signal” message on the screen, your computer or video source may be putting out a signal that is incompatible with the FPM-180(-TS). If this happens, reboot the computer with the previous display and adjust the display settings to be within the FPM-180(-TS) specifications (see Appendix F). Below is are the most common reasons a display may not operate correctly:

1. The resolution is to high or low for the LCD.
2. The refresh rate is set to high. Refresh on an LCD is different than a CRT. Set the refresh to 60Hz. CRT’s need a high refresh rate to avoid flicker. The refresh rate has no impact on an LCD.
3. The power source is incorrect, or there is no power. Check if the rear LED is ON or blinking. If the LED is not lit, check to be sure there is power to the unit.
4. The unit is malfunctioning. If you believe this to be true, disconnect the video cable from the rear of the LCD and connect to a known good display. If the computer display is working satisfactory and the video is within the appropriate range, then contact AutomationDirect.com technical support.

VICPAS
HMI Parts Center

3 Section Getting Started

Display Features

- The FPM-180(-TS) is capable of displaying 16M (24 Bit) colors in a continuous spectrum. The high contrast LCD enhances the image with no geometric distortion.
- FPM-180(-TS) Series directly accepts an analog 5 wire RGB with separate H/V (Horizontal / Vertical) sync. This is the standard PC video signal.The FPM-180(-TS) Series is auto synchronous, adjusting the display to the appropriate input between VGA and SXGA.
- The FPM-180(-TS) Series is supplied with a Anti-Glare Touch Screeen [TS models] or an Anti-Glare impact window on non touch screen models.
- The FPM-180(-TS) Series has an integrated 115/220VAC power supply as standard on all models.

Adjusting the Display

The FPM-180(-TS) Series display has an embedded microprocessor on the converter card [the electronics that drive the LCD], and has been recently updated with a more powerful chip set. In most cases the unit will require very little if any user intervention to operate correctly. That is, produce a sharp, stable picture.

The micoprocessor in the display has the capability to adjust itself to the computer to which it is attached. This auto-adjustment will take place when the unit is first installed and connected to a computer, if the video input changes, or the user initates it. If the picture is not satisfactory, the first step is to allow the unit to attempt to re-adjust itself to your computer.

Located on the rear of the unit is a membrane keypad used for adjusting the display. See figure 1 below:

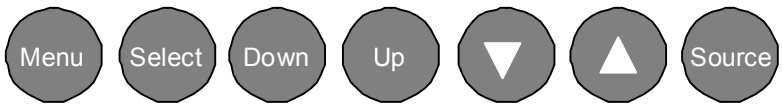

Figure 1

VICPAS
HMI Parts Center

Using the Auto-Adjust

The FPM-180(-TS) will attempt to adjust itself to your computers current video model. If the picture is stable, and centered vertically and horizontally the auto-adjustment is complete. If however the picture is not stable, and centered vertically and horizontally you can re-initate the auto adjustment. Once you have the unit displaying the resolution you desire for your application, do the following:

Press HOLD and release the “Select” button on the membrane. This will place the unit into a “Geometry Auto Adjust” mode. This operation will adjust the picture so it is centered both vertically and horizontally on the LCD screen. It will also make the necessary adjustments to the internal clock timing so that the picture is stable (without any decernable pixel jitter).

After having completed this step you may wish to adjust the color balance. This procedure adjusts for any imbalance in the Red, Green, and Blue levels from the video cable or video card. This is accomplished using the LCDs OSD (On Screen Menu) system.

OSD (On Screen Display) Adjustments

There are four membrane buttons (see Fig 1, above) located on the rear of the unit. They will activate the OSD and allow navigation to all adjustments the unit may require.

Press MENU key, OSD screen appears. [See Figure 2]

Press the UP/DOWN key to move between the five primary functions. (Indicated by highlighting)
Press the Select key when highlighting the Picture group to activate this sub-menu. You can now navigate the sub-menu using the UP/DOWN keys. To make an adjustment to an item use the ▼ ▲ buttons to make your adjustments

At anytime, press the Menu button two times to Exit and Save your settings.
This convention of Menu, Navigate, Select Sub Menu, Navigate, Select Item and Adjust item is used throughout the OSD screen set up.

Press MENU key to return previous state and press MENU key twice to exit OSD.

VICPAS
HMI Parts Center

PICTURE

Press MENU key to bring up the OSD. Press UP/DOWN key to move between the 5 primary screen functions. Press the Select button at Picture, to select it. Press the UP/DOWN key, you can now move between functions and press Select to adjust the value of each item with the ▼ ▲ key. Press MENU key to return previous state and press MENU key twice to exit OSD.

- BRIGHTNESS Function of adjusting main screen brightness.
- CONTRAST Function of adjusting main screen contrast.
- FREQUENCY Function of adjusting main screen sampling clock frequency.
- PHASE Function of adjusting main screen sampling clock phase.
- H POSITION Function of adjusting the horizontal position of main screen.
- V POSITION Function of adjusting the vertical position of main screen.

ADVANCED

Press MENU key to bring up the OSD. Press UP/DOWN key, to move between the 5 primary screen functions. Press the Select button at Advanced, to select it. Press the UP/DOWN key, you can now move between functions and press Select to adjust the value of each item with the▼ ▲ key. Press MENU key to return previous state and press MENU key twice to exit OSD.

- Color Temp Function of setup of main color. (Bluish, Normal, Reddish)
- User RED Function of adjusting value of RED.
- User BLUE Function of adjusting value of BLUE.
- User GREEN Function of adjusting value of GREEN.
- Gamma Function of adjusting value of color ratio.

COLOR WARP

Press MENU key to bring up the OSD. Press UP/DOWN key to move between the 5 primary screen functions. Press the Select button at Color Warp, to select it. Press the UP/DOWN key, you can now move between functions and press Select to adjust the value of each item with the ▼ ▲ key. Press MENU key to return previous state and press MENU key twice to exit OSD

- Color Warp Function of adjusting curve on main screen.
- Mode Function of selecting curve on main screen.
- Custom Center Function of adjusting color warp on center.
- Custom range Function of adjusting range on color warp.
- Saturation Function of adjusting saturation warp on center.
- Custom hue Function of adjusting the tone of color.

OPTIONS

Press MENU key to bring up the OSD. Press UP/DOWN key to move between the 5 primary screen functions. Press the Select button at Options, to select it. Press the UP/DOWN key, you can now move between functions and press Select to adjust the value of each item with the ▼ ▲ key. Press MENU key to return previous state and press MENU key twice to exit OSD

- OSD V Pos Function of adjusting the vertical position of OSD image.
- OSD H Pos Function of adjusting the horizontal position of OSD image.
- OSD Function of moving OSD image quickly.

UTILITIES

Press MENU key to bring up the OSD. Press UP/DOWN key to move between the 5 primary screen functions. Press the Select button at Utilities, to select it. Press the UP/DOWN key, you can now move between functions and press Select to adjust the value of each item with the▼ ▲ key. Press MENU key to return previous state and press MENU key twice to exit OSD

- OSD Timeout Function of adjusting OSD disappear time.
- OSD Bkground Function of adjusting at transparency on main screen to OSD image.
- Auto Adjust Function of finding optimized main screen automatically.
- Factory Reset Function of resetting all value on OSD.
- Power On Time Function of indicating system on time.
- Bklight OnTime Function of indicating panel on time.

NOTE: The OSD membrane has a Source button. This button is used to select other inputs to the LCD, Such as DVI, S-Video, or NTSC.

VICPAS
HMI Parts Center

4 Touch Screen Setup

Section

Introduction to Touch Screens

Touch screen interfaces have become the standard interface in the past 5 years. They are, rugged, reliable, extremely flexible and easier than ever to implement! The universal acceptance of the Windows GUI [Graphical User Interface] along with the extensive use of a mouse interface has significantly accelerated the use of a touch interface. Basically think of your touch screen as if it were a mouse.

AutomationDirect.com touch systems are mouse emulators. By installing a software driver and connecting to a serial port, the touch screen will support all the primary mouse functions:

The FPM-180(-TS) touch screen interface, is a high resolution, analog resistive. Following is a quick explanation of what all this means.

High Resolution: The touch screen resolution is 400 ppi [points per inch]

Analog Resistive: The actual touch glass is an analog device. Meaning there is a very low voltage applied to the X and Y axis of the touch screen. This current is applied to ITO [Iridium Tin Oxide] that is sputtered onto a polyester membrane. When you touch the screen you are changing the resistance on both the X and Y axis, producing an analog value that references a particular location.
This type of screen can be activated with a gloved finger or mechanical stylus.

The touch screen itself is connected to electronics [internal to the display unit] that provide the Analog to Digital conversion. When the screen is touched, the electronics convert the analog voltage to a digital value and add a "Mouse Click". This touch data is sent out from the display serial port to the PC serial port where the touch driver presents the data to the operating systems as if it were from a normal PC mouse. When the touch is released the new XY location is sent along with a "Mouse Up Click".

The touch screen interface to the PC is RS-232, so the recommend maximum distance from the PC is 50 feet., The driver and and interface have been tested to 50 Ft. using high quality cables. High quaility cables and connectors are important, especially if field connections are made. Poor quality cables will drastically reduce the performance of the RS-232 interface. The touch driver default baud rate is 9600.

Touch Screen Setup and Configuration:

If the unit does not have a touch screen, your configuration is complete. If your display is fitted with the optional touch screen interface, the following section will outline installation and set up. This system requires no special software knowledge, and can be installed and set up in minutes. The following section gives a detailed explanation of the software setup and configuration

VICPAS
HMI Parts Center

Touch Screen Driver Installation for *Windows 98*

Required items to **know** or **have** to install the Touch Driver.

- What Operating System you are using. **Windows 98**
- What Serial Port you are connected to. **Usually COM 1 or COM 2**
- The type of touch screen. **Smartset**
- The CD-ROM or Floppy disk included with the system.

Touch Screen Driver Installation for Windows 98

- Insert the provided CD
- Select Link to the Windows 98 driver
- Select **Open** from the Windows dialog box.
- Select **SmartSet** Controller for Com1 or Com2
- Remove the CD.
- Restart the computer; you will be prompted to calibrate the touch screen.
- Touch each of the 3 targets as directed. If the unit does not respond to your calibration touches then you have probably selected the wrong COM port. If so, reinstall the driver and selecting the correct COM port.
- You are now ready to use your touch screen.

Note 1: The touch screen calibration information is maintained in the computer. If you change computers, you will need to reinstall the touch screen driver software and recalibrate.

Note 2: If for any reason the touch screen performance is unsatisfactory, you can recalibrate at any time. This is done from the ELO icon under the Windows control panel

VICPAS
HMI Parts Center

Touch Screen Driver Installation for *Windows NT 4.0*

Required items to **know** or **have** to install the Touch Driver.

- What Operating System you are using. **Windows NT 4.0**
- What Serial Port you are connected to. **Usually COM 1 or COM 2**
- The type of touch screen. **Smartset**
- The CD-ROM or Floppy disk included with the system.

Touch Screen Driver Installation for Windows NT 4.0

- Insert the provided CD
- Select Link to the Windows NT driver
- Select **Open** from the Windows dialog box.
- Select **Next**
- Select **Yes** - To the license agreement
- Select **Next** - To the default installation folder
- Select **Next** - For Single Monitor installation
- Select the Com Port to which the touch interface is connected and **Next**
- Select **Finish**
- Remove the CD.
- Restart the computer. You will be prompted to calibrate the touch screen.
- Touch each of the 3 targets as directed. If the unit does not respond to your calibration touches then you have probably selected the wrong COM port. If so, press the Esc key on the keyboard to exit.
- Go to the ELO icon under Windows Control Panel.
- Select the correct Com Port, and Restart the computer.
- If this fails, reinstall the driver and select the correct COM port
- Once restarted, select the ELO icon under Windows Control Panel
- Select **Calibrate**, and then touch each of the 3 targets as they are displayed.
- You are now ready to use your touch screen.

Note 1: The touch screen calibration information is maintained in the computer. If you change computers, you will need to reinstall the touch screen driver software and recalibrate.

Note 2: If for any reason the touch screen performance is unsatisfactory, you can recalibrate at any time. This is done from the ELO icon under the Windows control panel

VICPAS
HMI Parts Center

Touch Screen Driver Installation for *Windows 2000*

Required items to **know** or **have** to install the Touch Driver.

- What Operating System you are using. **Windows 2000**
- What Serial Port you are connected to. **Usually COM 1 or COM 2**
- The type of touch screen. **Smartset**
- The CD-ROM or Floppy disk included with the system.

Touch Screen Driver Installation for Windows 2000

- Insert the provided CD
- Select Link to Windows 2000 driver
- Select **Open** from the Windows dialog box.
- Select **Next**
- Select **Yes** - To the license agreement
- Select the Com Port to which the touch interface is connected and Next
- Select **Next,** the driver will now start to install.
- Select **YES** - To continue
- Select **Finish**
- Remove the CD.
- Select **YES** to Restart.
- When the system restarts touch each of the 3 targets as directed.
- If the unit does not respond to your calibration touches then you have probably selected the wrong COM port. If so, press the Esc key to exit.
- Go to the ELO icon under Windows Control Panel.
- Select the correct Com port, and restart the computer.
- Once restarted, select the ELO icon under Windows Control Panel
- Select **Align and Calibrate**; then touch each of the 3 targets as directed.
- You are now ready to use your touch screen.

Note 1: The touch screen calibration information is maintained in the computer. If you change computers, you will need to reinstall the touch screen driver software and recalibrate.

Note 2: If for any reason the touch screen performance is unsatisfactory, you can recalibrate at any time. This is done from the ELO icon under the Windows control panel

VICPAS
HMI Parts Center

Touch Screen Driver Installation for *Windows XP*

Required items to **know** or **have** to install the Touch Driver.

- What Operating System you are using. **Windows XP**
- What Serial Port you are connected to. **Usually COM 1 or COM 2**
- The type of touch screen. **Smartset**
- The CD-ROM or Floppy disk included with the system.

Touch Screen Driver Installation for Windows XP

- Insert the provided CD
- Select Link to XP driver
- Select **Open** from the Windows dialog box.
- Select Yes - To the license agreement
- Select the Com Port to which the touch interface is connected and Next
- Select **Next,** the driver will now start to install.
- Select **YES** - To continue
- Select **Finish**
- Remove the CD
- Select **YES** to Restart
- Go to the ELO icon under Windows Control Panel.
- Verify the Com Port is correct
- Select **Align**; then touch each of the 3 targets as directed.
- If the unit does not respond to your calibration touches then you have probably selected the wrong COM port. If so, press the Esc key to exit.
- Select the correct Com port, and restart the computer, then align the touchscreen.
- You are now ready to use your touch screen.

Note 1: The touch screen calibration information is maintained in the computer. If you change computers, you will need to reinstall the touch screen driver software and recalibrate.

Note 2: If for any reason the touch screen performance is unsatisfactory, you can recalibrate at any time. This is done from the ELO icon under the Windows control panel

5 Section Mounting Instructions

Panel Mounting Procedure

1. Cut and drill the panel (refer to Figure 2; Panel Mount Drawing Appendix G). Measurements are in inches. A template of the hole pattern has been supplied with your monitor to assist in making the mounting holes accurately. Also, there is an AutoCad .dxf file included on the provided CD. This computer file can be used in a design drawing or forwarded to your panel fabricator for the proper mounting

2. If access to the side of the monitor is not available following installation, attach the power and video cables to the side of the monitor at this time.
3. Install the monitor in the prepared cutout.
4. Install the washers and lock nuts supplied with the monitor.
   Note: Use #10-32 nuts for mounting.
5. Tighten all mounting nuts evenly to a torque of 24 inch-pounds.

ATTENTION: Mounting nuts must be tightened to a torque of 24 inch-pounds to provide panel seal and avoid potential damage. AutomationDirect assumes no responsibility for water or chemical damage to the monitor or other equipment within the enclosure due to improper installation.

6. Attach the power, video and touch screen cables (if this is a –TS unit) to the side of the monitor.

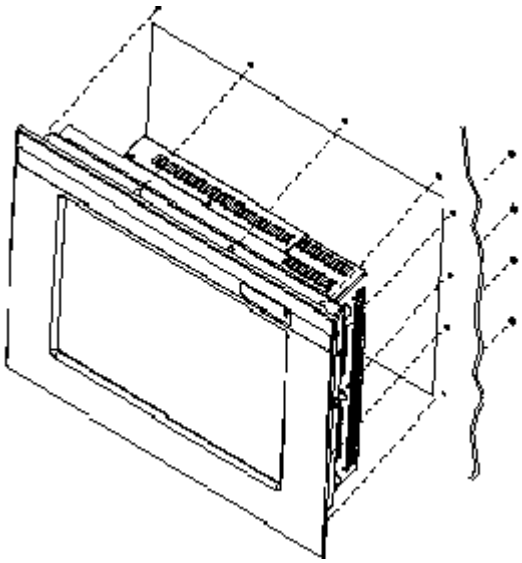

Figure 2: Panel Mount Drawing

VICPAS
HMI Parts Center

6 Troubleshooting Tips

Section

No Picture	Check that the signal cable is properly connected to the display. Try disconnecting the video cable from the display and connecting to another display if available to confirm the presence of proper video. Make sure power is connected to the proper AC source. Make sure the resolution mode is supported by the display and check display settings of the PC Confirm that the video cable is not defective.

Image Persistence	Image persistence occurs when a ghost of an image remains on the screen after the screen image has been changed. Unlike a CRT monitor, an LCD monitor's image persistence is not permanent. To erase an image ghost, turn the monitor off for several hours. What happens is the the liquid crystals after extened periods of operation with take a "set". To avoid this condition, install a screen saver progam on the computer

Picture Quality & Image Stability	Check for proper video cable for proper grounding and shielding. Check the signal source for proper signal. Check for proper adjustment of the Phase and Frequency controls. Check for proper recommended signal timing.

VICPAS
HMI Parts Center

Green LED not lit	Check for proper power and power connections

Display image is not properly sized	Press the “Select” button to Auto Adjust the display Adjust the Vertical and Horizontal size controls via the OSD. (Reference OSD Adjustments section) Ensure that a supported mode is selected on the display card or system being used. Consult the display card or system manual for proper video.

Image will not adjust	Video timing outside of range. Use the on-screen menu to adjust the Clock Setting. Make sure timing is within VESA standard.

Slight distortion in text or Graphics	Not working in native resolution.

Display is present but “bars” Appear or roll across screen	Ground loop problem between computer and display Interference from adjacent equipment.

Vertical shaded bars on Screen image	Horizontal size not properly adjusted. Adjust horizontal size

Image is not stable.	Monitor has incorrect or bad sync signals.. Check for proper video cable installation. Replace suspected faulty cable. Check to ensure that video source is within the display’s operating range.

VICPAS
HMI Parts Center

7 Cleaning & Maintenance

Section

Cleaning

CAUTION: SHUT OFF YOUR TOUCH SCREEN BEFORE CLEANING!!

IF YOUR DISPLAY IS A –TS MODEL, THAT IS A TOUCH SCREEN DISPLAY, THE SCREEN WILL BE ACTUATED BY CLEANING. PRESSING ON THE SCREEN WHILE CLEANING WILL BE SEEN AS A TOUCH TO THE SYSTEM WHICH COULD CREATE A POTENTIALLY DANGEROUS CONDITION!!

Occasionally clean the display panel and cabinet with a soft cloth dampened (not soaked) with a mild (non-abrasive) glass cleaner. Keep turning a fresh side of the cloth toward the screen surface to avoid scratching it with accumulated grit.

Note: The solvent should be applied only to the cloth, and not directly on the monitor screen.

Do not use paper products as they may scratch the surface. To minimize the risk of abrasion, allow the screen to air dry. Special care should be taken when cleaning a touch screen or polycarbonate shield that is installed over the screen. Abrasive and certain chemical cleaners can damage the surface.
Never use alcoholic or ammoniac cleaners to clean the polycarbonate shield or a touch screen.

Replacing a Line Cord

To avoid shock and fire hazards, the monitor's power cord should be replaced if the insulation becomes broken or if it develops a loose internal connection.

Other Maintenance

Qualified service personnel should perform all maintenance, except for the power cord replacement described above.

VICPAS
HMI Parts Center

8 Appendices

Section

Appendix A – Video Pin Assignments

Pin assignments for the HD15 video connector

Pin 1	Red Video	Pin 9	No Connection
Pin 2	Green Video	Pin 10	Sync Ground
Pin 3	Blue Video	Pin 11	Not Used
Pin 4	Not Used	Pin 12	Bi-Directional Data
Pin 5	Return	Pin 13	Horizontal Sync
Pin 6	Red Video Ground	Pin 14	Vertical Sync
Pin 7	Green Video Ground	Pin 15	Data Clock (SCL)
Pin 8	Blue Video Ground		

Appendix B – RS-232 Pin Assignments

Pin assignment for 9 Pin Optional Touch Screen Connector

Pin 1	DCD	Data Carrier Detect
Pin 2	RD (Rx)	Receive Data
Pin 3	SD (Tx)	Transmit Data
Pin 4	DTR	Data Terminal Ready
Pin 5	SG	Signal Ground
Pin 6	DSR	Data Set Ready
Pin 7	RTS	Request to Send
Pin 8	CTS	Clear to Send
Pin 9	NC	No Connection

VICPAS
HMI Parts Center

Appendix C – DVI Video Pin Assignments

Pin 1	TMDS Data 2-	
Pin 2	TMDS Data 2+	
Pin 3	TMDS Data 2/4 Shield	
Pin 4	TMDS Data 4- (NC)	
Pin 5	TMDS Data 4+ (NC)	
Pin 6	DDC Clock	
Pin 7	DDC Data	
Pin 8	NC	
Pin 9	NC	No Connection
Pin 10	TMDS Data 1-	
Pin 11	TMDS Data 1/3 Shield	
Pin 12	TMDS Data 3- (NC)	
Pin 13	TMDS Data 3+ (NC)	
Pin 14	5 V	
Pin 15	Ground	
Pin 16	Hot Plug Detect	
Pin 17	TMDS Data 0-	
Pin 18	TMDS Data 0+	
Pin 19	TMDS Data 0/5 Shield	
Pin 20	TMDS Data 5-	
Pin 21	TMDS Data 5+	
Pin 22	TMDS Clock Shield	
Pin 23	TMDS Clock +	
Pin 23	TMDS Clock -	

Appendix D – S-Video

Pin 1	Ground
Pin 2	Ground
Pin 3	Chroma
Pin 4	Luma

Appendix E – NTSC

Pin 1	Composite Video
Pin 2	Ground

VICPAS
HMI Parts Center

Appendix F –General Specifications

FPM-180 & FPM-180-TS

Bold - Indicates Up Dated Specification

Active Screen Area	14.4" x 11.31"
Brightness	**300**
Contrast	**350:1**
Lamp Life	**40K**
Max Screen Resolution	VGA-SXGA
Vertical Frequency Range	50-85 Hz.
Horizontal Frequency Range	15-80 KHz.
PC Video Input	Separate Sync (5 Wire) Composite Sync (4 Wire) Sync On Green (3 Wire)
Video	NTSC / PAL
Native Resolution (Best Picture)	SXGA
View Angle L / R	80 / 80
View Angle Up / Dn	80 / 80
Input Voltage	90-264 VAC Auto-switching
Current Draw	**.4 / 120 VAC**
Input power	**48W**
Installed Depth	**2.937" Nominal (2 15/16”)**
Chassis Construction	16 Ga SS
Bezel Construction	Al Machined .250"
Bezel OD	19.0" x 15.72"
Bezel Finish	Black Textured
Auto Adjust	**Yes, on Power Up**
Resistive Touch	Yes
5 Wire Touch	Yes
Touch Interface	RS-232 or USB
Recessed Cable Exit	Yes
DVI Interface	**DVI-D Standard (Female)**
PC Video Interface	**VGA (HD-15F) (Female)**
S-Video	**4 Pin Mini Din (Female)**
NTSC	**RCA (Female)**
Colors	24bit (16M)
Operating Temp	0-50
Storage Temp	0-60
Storage Humidity	10-95
NEMA Front End	4/12

VICPAS
HMI Parts Center

Appendix G – Mounting Dimentions

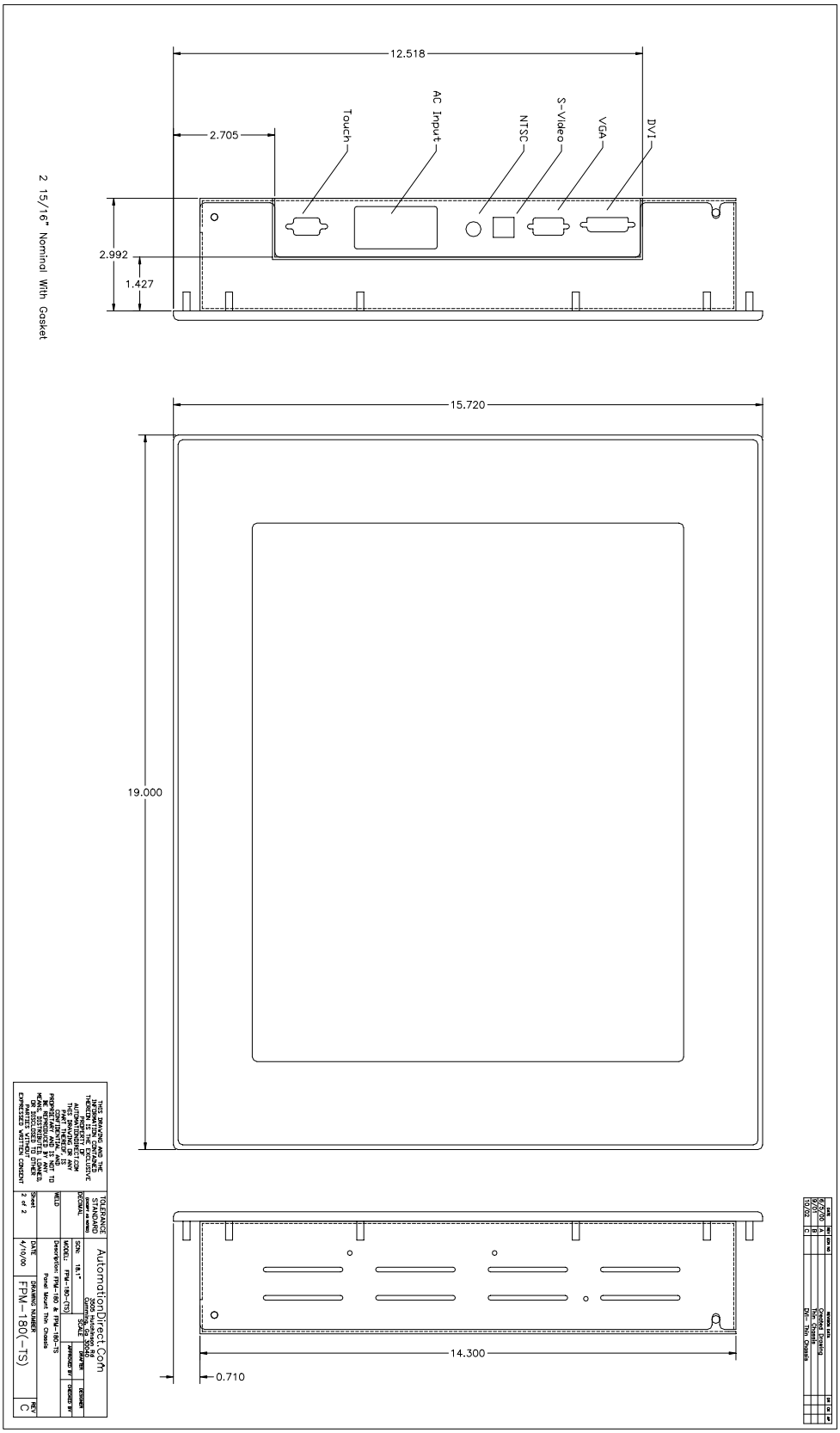

VICPAS
HMI Parts Center

DATE	REV	ECN NO	REVISION DATA	DR	CK	AP
6/5/00	A		Created Drawing			
9/01	B		Thin Chassis			

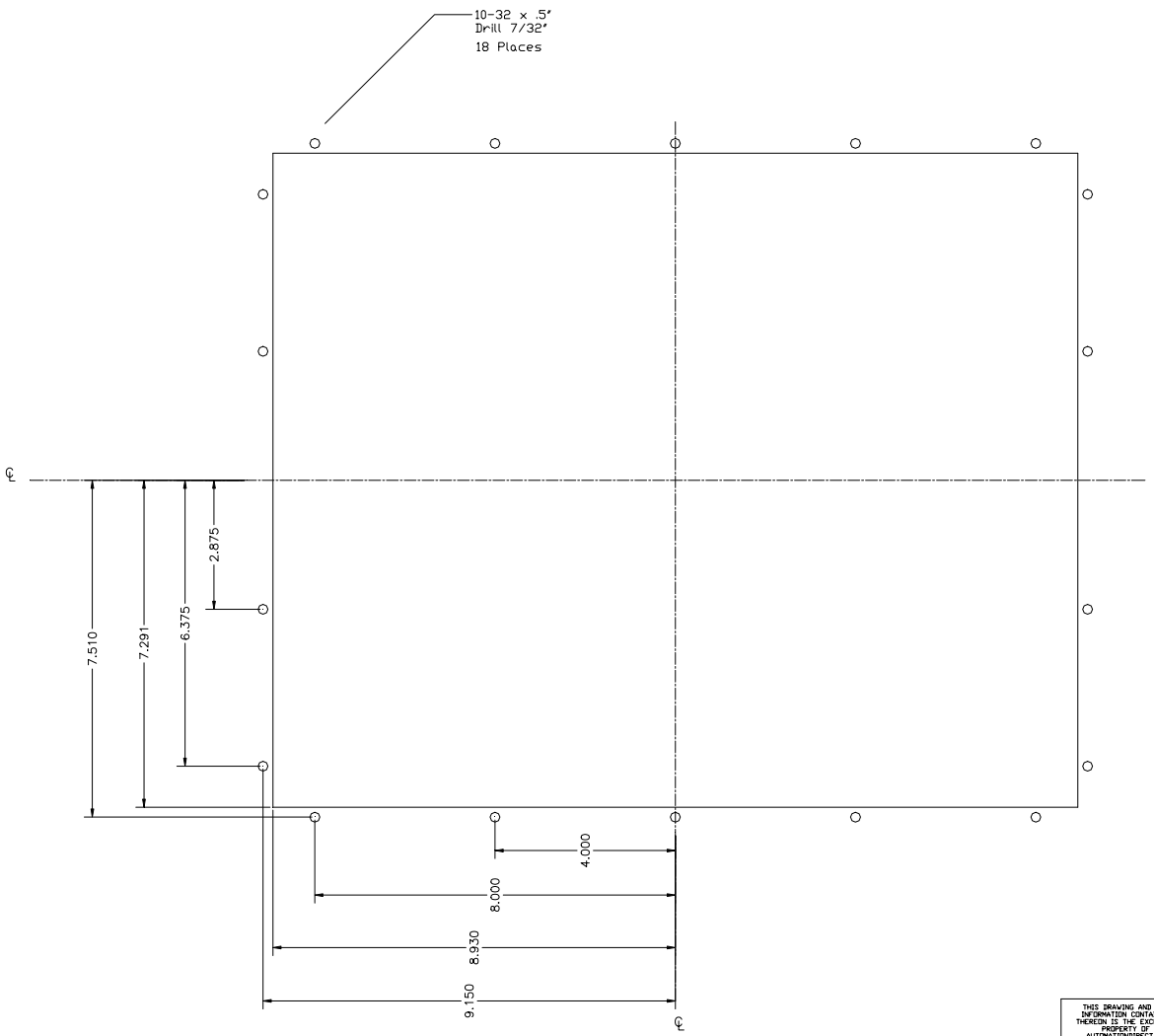

THIS DRAWING AND THE INFORMATION CONTAINED THEREIN IS THE EXCLUSIVE PROPERTY OF AUTOMATIONDIRECT.COM THIS DRAWING OR ANY PART THEREOF, IS CONFIDENTIAL AND PROPRIETARY AND IS NOT TO BE REPRODUCED BY ANY MEANS, DISTRIBUTED, LOANED, OR DISCLOSED TO OTHER PARTIES WITHOUT EXPRESSED WRITTEN CONSENT

TOLERANCE STANDARD (EXCEPT AS NOTED)
DECIMAL
WELD

AutomationDirect.Com
3505 Hutchinson Rd
Cumming, Ga 30040

SCALE: 16.1" | DRAWN | DESIGNER
MODEL: FPM-180-(TS) | APPROVED BY | CHECKED BY

Description: FPM-180 & FPM-180-TS
Panel Mount Thin Chassis

Sheet 1 of 2
DATE 4/10/00
DRAWING NUMBER FPM-180-TEMPLET
REV B

VICPAS
HMI Parts Center

NOTES

Model Number: _____

Serial Number: _____