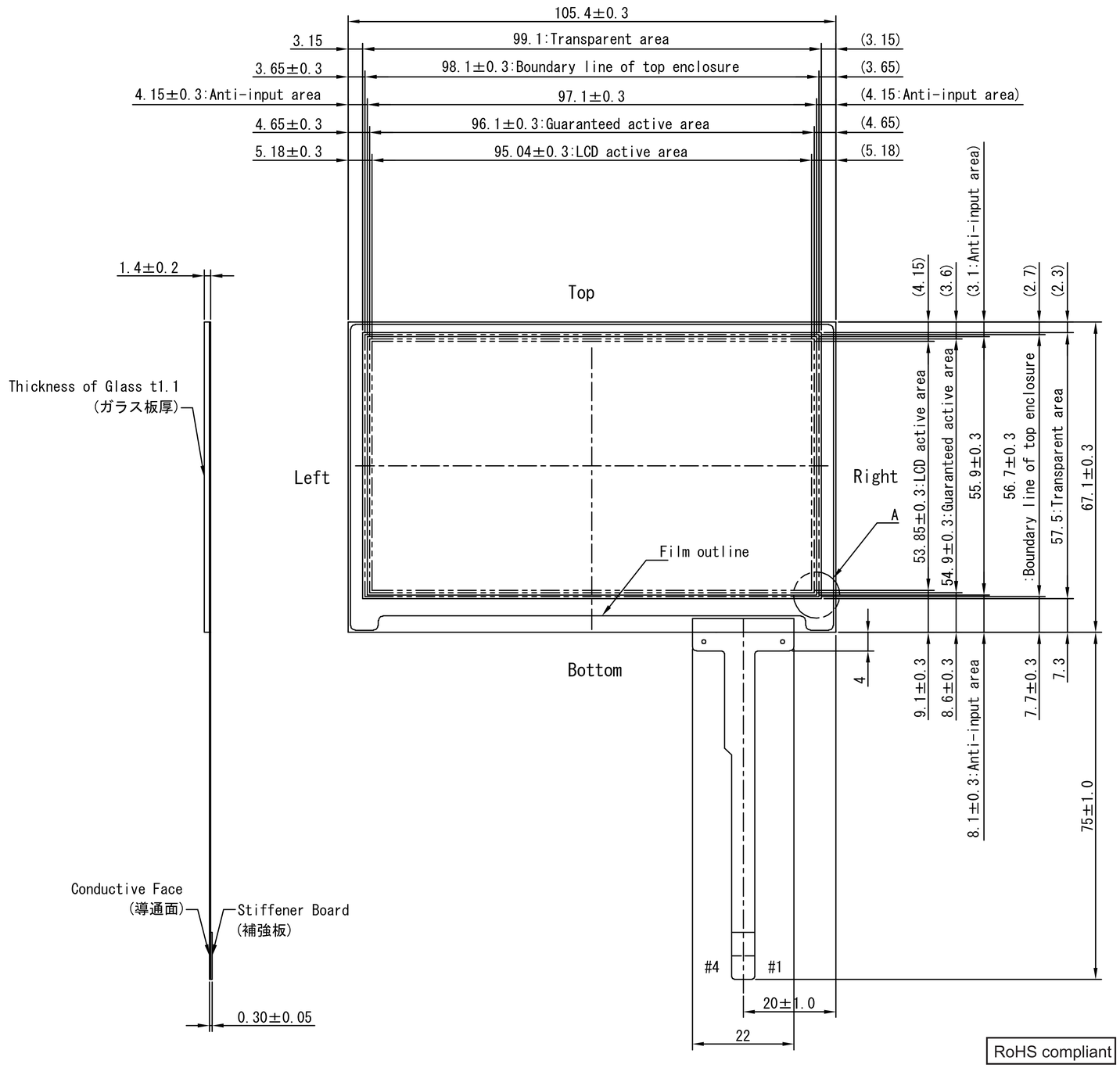

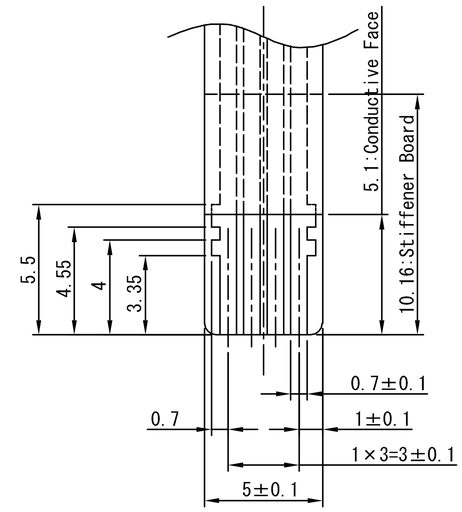

Conductive Face(導通面)

FPC-Type Cable

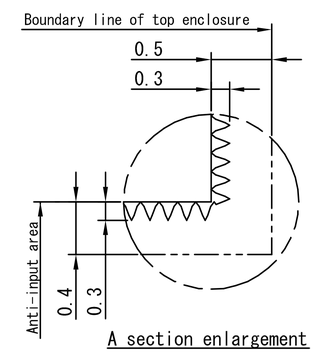

A section enlargement

Generally Specs.

Transparency	86% Typ.
HAZE	5% Typ.
Finger Life	1,000,000 times min.
Pen Life	100,000 words min.
Linearllity	1.5% max. [initial value] 3.0% max. [after environmental & life test]

RoHS compliant

Part Number: N010-0554-T241

Connector Pin Assignment

Pin #	Description
#1	Right
#2	Bottom
#3	Left
#4	Top

NOTE
1. Tolerance:±0.5(指定なき公差は±0.5とする。)
2. Pen & Finger input type.(本品はペン/指入力兼用タイプ。)
3. Anti-Smudge type.(ﾌｨﾙﾑは防汚機能付きﾌｨﾙﾑを使用。)

EDIT.	DATE	DESIG.	CHECK	DESCRIPTION		
DESIG.	2006/5/21	T.Nakajima	CHECK			APPR.

TITLE: Touch Panel

DRAW. NO.: XXJ-910

CUST.:

FUJITSU COMPONENT LIMITED

SHEET: /

01.10 FDNCA-3901-2

DOCUMENT CONTROL SECTION

DATE