SIEMENS

SINUMERIK 840D/840Di/810D

Operator Components

Manual

Valid for control

SINUMERIK 840D/840DE
SINUMERIK 840Di/840DiE
SINUMERIK 810D/810DE

07/2007
6FC5297-7AA50-0BP2

Foreword

Connection conditions 1

Operator panel front: OP 08T 2

Operator panel front: OP 010 3

Operator panel front: OP 010S 4

Operator panel front: OP 010C 5

Operator panel front: OP 012 6

Operator panel front: OP 012T 7

Operator panel front: TP 012 8

Operator panel front: OP 015 9

Operator panel front: OP 015A 10

Operator panel front: TP 015A 11

Operator panel front: OP 015AT 12

Operator panel front: TP 015AT 13

Operator panel 15" TFT with VLE 14

Operator panel 15" TFT without VLE 15

Direct control key module 16

PCU 20 17

PCU 50 18

PCU 50.3 19

PCU 70 20

Videolink (VL) 21

Thin Client Unit (TCU) 22

Handheld Terminal HT 6 23

Handheld Terminal HT 8 24

Mini handheld unit 25

Handheld unit / distributor box 26

Machine control panel: MCP 483C 27

Machine control panel: MCP 483 28

Machine control panel: MCP 310 29

Machine control panel: OP 032S 30

Machine Pushbutton Panel: MPP 483 31

Pushbutton panel: PP 012 32

MPI interface for customer operator panel 33

Electronic handwheels 34

Full CNC keyboard: KB 483C 35

Full CNC keyboard: KB 310C 36

Full CNC keyboard: OP 032S 37

Standard PC keyboard KBPC PX US 38

Standard PC keyboard KBPC CG US 39

Standard PC keyboard KBPC USB US 40

Standard PC keyboard KBPC SC US 41

Keyboard tray 42

Compact FlashCard 43

3.5" Floppy Disk Drive 44

Floppy disk drive 3.5" (USB) 45

Card reader with USB interface 46

Cooling 47

ESD guidelines A

List of abbreviations B

Appendix C

Safety Guidelines

This manual contains notices you have to observe in order to ensure your personal safety, as well as to prevent damage to property. The notices referring to your personal safety are highlighted in the manual by a safety alert symbol, notices referring only to property damage have no safety alert symbol. These notices shown below are graded according to the degree of danger.

⚠DANGER
indicates that death or severe personal injury **will** result if proper precautions are not taken.

⚠WARNING
indicates that death or severe personal injury **may** result if proper precautions are not taken.

⚠CAUTION
with a safety alert symbol, indicates that minor personal injury can result if proper precautions are not taken.

CAUTION
without a safety alert symbol, indicates that property damage can result if proper precautions are not taken.

NOTICE
indicates that an unintended result or situation can occur if the corresponding information is not taken into account.

If more than one degree of danger is present, the warning notice representing the highest degree of danger will be used. A notice warning of injury to persons with a safety alert symbol may also include a warning relating to property damage.

Qualified Personnel

The device/system may only be set up and used in conjunction with this documentation. Commissioning and operation of a device/system may only be performed by **qualified personnel**. Within the context of the safety notes in this documentation qualified persons are defined as persons who are authorized to commission, ground and label devices, systems and circuits in accordance with established safety practices and standards.

Prescribed Usage

Note the following:

⚠WARNING
This device may only be used for the applications described in the catalog or the technical description and only in connection with devices or components from other manufacturers which have been approved or recommended by Siemens. Correct, reliable operation of the product requires proper transport, storage, positioning and assembly as well as careful operation and maintenance.

Trademarks

All names identified by ® are registered trademarks of the Siemens AG. The remaining trademarks in this publication may be trademarks whose use by third parties for their own purposes could violate the rights of the owner.

Disclaimer of Liability

We have reviewed the contents of this publication to ensure consistency with the hardware and software described. Since variance cannot be precluded entirely, we cannot guarantee full consistency. However, the information in this publication is reviewed regularly and any necessary corrections are included in subsequent editions.

Siemens AG
Automation and Drives
Postfach 48 48
90327 NÜRNBERG
GERMANY

Ordernumber: 6FC5297-7AA50-0BP2
℗ 08/2007

Copyright © Siemens AG 2007.
Technical data subject to change

Foreword

Layout of manual

SINUMERIK® Documentation

The SINUMERIK documentation is organized in three parts:

- General documentation
- User documentation
- Manufacturer/service documentation

An overview of publications, which is updated monthly and also provides information about the language versions available, can be found on the Internet at:
http://www.siemens.com/motioncontrol
Select "Support" → "Technical Documentation" → "Overview of Publications".

The Internet version of DOConCD (DOConWEB) is available under:
http://www.automation.siemens.com/doconweb

Information on training courses and FAQs (frequently asked questions) can be found on the Internet at:

http://www.siemens.com/motioncontrol under menu option "Support".

Target group

This documentation is intended for:

- Project engineers, electricians and installers
- Service and operating personnel

Standard version

This documentation only describes the functionality of the standard version. Any additions or modifications implemented by the machine manufacturer will be documented by the machine manufacturer.
Other functions not described in this documentation may be executable in the control. However, no claim can be made regarding the availability of these functions when the equipment is first supplied or in the event of servicing.

For the sake of simplicity, this documentation does not contain all detailed information about all types of the product and cannot cover every conceivable case of installation, operation, or maintenance.

Technical Support

If you have any technical questions, please contact our hotline:

	Europe/Africa	Asia/Australia	America
Phone	+49 180 5050 222	+86 1064 719 990	+1 423 262 2522
Fax	+49 180 5050 223	+86 1064 747 474	+1 423 262 2289
Internet	http://www.siemens.com/automation/support-request		
E-mail	adsupport@siemens.com		

Note

Country-specific telephone numbers for technical support are provided at the following Internet address: Enter http://www.siemens.com/automation/service&support

Questions about the manual

If you have any queries (suggestions, corrections) in relation to this documentation, please send a fax or e-mail to the following address:

Fax	+49 9131 98 63315
E-mail	docu.motioncontrol@siemens.com

A fax form is available in the appendix of this document.

SINUMERIK Internet address

http://www.siemens.com/sinumerik

EC declaration of conformity

The EC Declaration of Conformity for the EMC Directive can be found/obtained from:

on the Internet: http://support.automation.siemens.com

under the Product/Order No. 15257461
or at the relevant branch office of the A&D MC division of Siemens AG.

Notes

Danger notices

The following notices are intended to ensure both your personal safety and to prevent damage occurring to the products described or any connected devices and machines.

⚠WARNING

Operating electrical equipment has parts and components that are at hazardous voltage levels.

Actions by an **unqualified** device/system operator or failure to observe the warning notices may result in serious physical injury or material damage. Only suitably **qualified personnel**, trained in assembling, installing, commissioning or operating the product should work on this device/system.

Should it be necessary to test or take measurements on live equipment, then the specifications and procedures defined in Accident Prevention Regulation VBG 4.0 must be adhered to, in particular § 8 "Permissible deviations when working on live components". Suitable electric tools should be used.

⚠WARNING

Repairs to devices that have been supplied by our company must only be carried out by **SIEMENS Customer Service** or by repair centers **authorized by SIEMENS**. When replacing parts or components, only use those parts that are included in the spare parts list.

Before opening the device, always disconnect the power supply.

EMERGENCY STOP devices complying with EN 60204 IEC 204 (VDE 0113) must remain effective in all automation equipment modes. Resetting the EMERGENCY STOP device must not cause an uncontrolled or undefined restart.

Additional external measures must be taken, or devices must be created that enforce a safe operational state even when there is a fault (e.g. using independent limit value switches, mechanical locks, etc.) at any location in the automation equipment where faults might cause major material damage or even physical injury, in other words, where faults could be dangerous.

⚠CAUTION

Connecting cables and signal lines should be installed so that inductive and capacitive interference do not in any way impair the automation functions.

General Information

Note

Denotes an important item of information about the product, handling of the product or a section of the documentation which requires particular attention.



Machine manufacturer

This pictorial symbol always appears in this document to indicate that the machine manufacturer can affect or modify the function described. Observe the machine manufacturer's specifications.

Table of contents

Foreword 7

1 Connection conditions 29

1.1 Secondary electrical conditions 29
1.1.1 Prerequisites 29
1.1.2 Electromagnetic compatibility (EMC) 30
1.1.3 Power supply 31
1.1.4 Safe isolation to EN 61800-5-1 32
1.1.5 Grounding concept 33
1.1.6 RI suppression measures 35
1.1.7 Pin assignment of the interfaces 36
1.1.8 Handling membrane connectors 46

1.2 Ambient climatic and mechanical conditions 47
1.2.1 Relevant standards 47
1.2.2 Transport and storage conditions 47
1.2.3 Operating conditions 49

1.3 MPI/OPI networking rules 49

2 Operator panel front: OP 08T 53

2.1 Description 53

2.2 Operator controls and display elements 55
2.2.1 View 55
2.2.2 Keyboard and display 56
2.2.3 Screen brightness control 57

2.3 Interfaces 59

2.4 Installation 60

2.5 Technical data 62

2.6 Spare parts 63

2.7 Accessories 64
2.7.1 Overview 64
2.7.2 Membrane keyboard: Labeling the slide-in labels 64

3 Operator panel front: OP 010 69

3.1 Description 69

3.2 Operator controls and indicators 70
3.2.1 View 70
3.2.2 Keyboard and display 71
3.2.3 Screen saver 72

3.3 Interfaces 73

3.4 Mounting 74
3.4.1 Preparation for mounting 74

3.4.2 Assembling an OP 010 and a PCU ... 76
3.4.3 Mounting on the mounting wall ... 76
3.4.4 Softkey labeling ... 76
3.5 Technical specifications ... 77
3.6 Replacement parts ... 80
3.6.1 Overview ... 80
3.6.2 Replacement ... 81
4 Operator panel front: OP 010S ... 85
4.1 Description ... 85
4.2 Operator controls and indicators ... 86
4.2.1 View ... 86
4.2.2 Keyboard and display ... 87
4.2.3 Screen saver ... 87
4.3 Interfaces ... 88
4.4 Mounting ... 90
4.4.1 Preparation for mounting ... 90
4.4.2 Mounting on the mounting wall ... 91
4.4.3 Assembling an OP 010S and a PCU ... 91
4.5 Technical specifications ... 94
4.6 Replacement parts ... 96
4.6.1 Overview ... 96
4.6.2 Replacement ... 97
5 Operator panel front: OP 010C ... 99
5.1 Description ... 99
5.2 Operator controls and indicators ... 100
5.2.1 View ... 100
5.2.2 Keyboard and display ... 101
5.2.3 Screen saver ... 102
5.3 Interfaces ... 103
5.4 Mounting ... 105
5.4.1 Preparation for mounting ... 105
5.4.2 Assembling an OP 010C and a PCU ... 106
5.4.3 Mounting on the mounting wall ... 106
5.5 Technical specifications ... 108
5.6 Replacement parts ... 110
5.6.1 Overview ... 110
5.6.2 Replacement ... 111
6 Operator panel front: OP 012 ... 113
6.1 Description ... 113
6.2 Operator controls and indicators ... 114
6.2.1 View ... 114
6.2.2 Keyboard and display ... 115
6.2.3 Screen saver ... 116
6.3 Interfaces ... 117

6.4 Mounting 119
6.4.1 Preparation for mounting 110
6.4.2 Assembling an OP 012 and a PCU 120
6.4.3 Mounting on the mounting wall 123
6.4.4 Softkey labeling 124
6.5 Technical specifications 125
6.6 Replacement parts 127
6.6.1 Overview 127
6.6.2 Replacement 128
7 Operator panel front: OP 012T 131
7.1 Description 131
7.2 Operator controls and indicators 133
7.2.1 View 133
7.2.2 Keyboard and display 134
7.2.3 Screen saver 135
7.3 Interfaces 136
7.4 Mounting 137
7.4.1 Preparation for mounting 137
7.4.2 Mounting on the mounting wall 138
7.4.3 Direct control key module connection 139
7.5 Technical data 140
7.6 Spare parts 141
7.7 Accessories 142
8 Operator panel front: TP 012 143
8.1 Description 143
8.2 Operator controls and indicators 144
8.2.1 View 144
8.2.2 Operation 144
8.2.3 Screen saver 145
8.3 Interfaces 146
8.4 Mounting 147
8.4.1 Preparation for mounting 147
8.4.2 Assembling the TP 012 and PCU 148
8.4.3 Mounting on the mounting wall 148
8.4.4 Calibration of the touch screen 149
8.5 Technical specifications 150
8.6 Replacement parts 152
8.6.1 Overview 152
8.6.2 replacement 153
9 Operator panel front: OP 015 155
9.1 Description 155
9.2 Operator controls and indicators 156
9.2.1 View 156
9.2.2 Keyboard and display 157
9.2.3 Screen saver 157

9.3 Interfaces ... 158
9.4 Mounting ... 159
9.4.1 Preparation for mounting ... 159
9.4.2 Assembling an OP 015 and a PCU ... 160
9.4.3 Mounting on the mounting wall ... 160
9.5 Technical specifications ... 162
9.6 Replacement parts ... 164
9.6.1 Overview ... 164
9.6.2 Replacement ... 165
10 Operator panel front: OP 015A ... 167
10.1 Description ... 167
10.2 Operator controls and indicators ... 168
10.2.1 View ... 168
10.2.2 Keyboard and display ... 169
10.2.3 Screen saver ... 170
10.3 Interfaces ... 171
10.4 Mounting ... 172
10.4.1 Preparation for mounting ... 172
10.4.2 Assembling an OP 015A and a PCU ... 173
10.4.3 Mounting on the mounting wall ... 175
10.4.4 Softkey labeling ... 176
10.5 Technical specifications ... 177
10.6 Spare parts ... 179
10.6.1 Overview ... 179
10.6.2 Replacement ... 180
11 Operator panel front: TP 015A ... 189
11.1 Description ... 190
11.2 Operator controls and indicators ... 190
11.2.1 View ... 190
11.2.2 Operation ... 191
11.2.3 Keyboard and display ... 191
11.2.4 Screen saver ... 193
11.3 interfaces ... 194
11.4 Mounting ... 196
11.4.1 Preparation for mounting ... 196
11.4.2 Assembling TP 015A and PCU ... 197
11.4.3 Mounting on the mounting wall ... 199
11.4.4 Calibration of the touch screen ... 200
11.4.5 Softkey labeling ... 200
11.5 Technical specifications ... 201
11.6 Spare parts ... 203
11.6.1 Overview ... 203
11.6.2 Replacement ... 204
12 Operator panel front: OP 015AT ... 215
12.1 Description ... 215

12.2 Operator controls and display elements 217
12.2.1 View 217
12.2.2 Keyboard and display 218
12.2.3 Screen saver 219
12.3 Interfaces 220
12.3.1 Overview 220
12.3.2 Description 221
12.4 Assembly 223
12.4.1 Mounting 223
12.4.2 Softkey labeling 224
12.5 Technical data 225
12.6 Spare parts 226
12.6.1 Overview 226
12.6.2 Replacement 227
13 Operator panel front: TP 015AT 235
13.1 Description 235
13.2 Operator controls and display elements 237
13.2.1 View 237
13.2.2 Operation 238
13.2.3 Keyboard and display 238
13.2.4 Screen saver 240
13.3 Interfaces 241
13.3.1 Overview 241
13.3.2 Description 242
13.4 Assembly 244
13.4.1 Mounting 244
13.4.2 Touchscreen calibration 245
13.4.3 Softkey labeling 245
13.5 Technical data 247
13.6 Spare parts 248
13.6.1 Overview 248
13.6.2 Replacement 249
14 Operator panel 15" TFT with VLE 259
14.1 Description 259
14.1.1 Validity 259
14.1.2 Overview 260
14.1.3 System Features 260
14.1.4 Mechanical design 262
14.1.4.1 Operator panel front 262
14.1.4.2 Machine control panels 264
14.1.4.3 Videolink transmitter 268
14.1.4.4 Cable 269
14.2 Operator controls and indicators 270
14.2.1 View of function blocks 270
14.2.2 Description of the function blocks 271
14.2.2.1 Operator panel front 271
14.2.2.2 Machine control panel for turning and milling 272
14.2.2.3 Videolink transmitter 273

14.2.2.4 Internal operating displays (LEDs) ... 274
14.2.3 Screen saver ... 275

14.3 Interfaces ... 276
14.3.1 Hardware ... 276
14.3.1.1 Overview ... 276
14.3.1.2 Interface assignment for operator panel front ... 277
14.3.1.3 Interface assignment for QWERTY keyboard ... 280
14.3.1.4 Interface assignment for MCP ... 182
14.3.1.5 Interface assignment for videolink transmitter ... 284
14.3.2 Software ... 288

14.4 Mounting ... 290
14.4.1 Operator panel front with videolink receiver ... 290
14.4.2 Machine control panel ... 292
14.4.3 Videolink transmitter ... 293

14.5 Technical specifications ... 298
14.5.1 Operator panel front ... 298
14.5.2 Machine control panel ... 298
14.5.3 Videolink transmitter ... 299

14.6 Replacement parts ... 300
14.6.1 Overview ... 300
14.6.2 replacement ... 300
14.6.2.1 Hand wheel ... 300
14.6.2.2 Rotary switch ... 301
14.6.2.3 Mouse ... 304

15 Operator panel 15" TFT without VLE ... 307

15.1 Description ... 307
15.1.1 Validity ... 307
15.1.2 Overview ... 308
15.1.3 System Features ... 309
15.1.4 Mechanical design ... 309
15.1.4.1 Operator panel front ... 310
15.1.4.2 Machine control panels ... 311
15.1.4.3 Cable ... 315

15.2 Operator controls and indicators ... 316
15.2.1 View of function blocks ... 316
15.2.2 Description of the function blocks ... 317
15.2.2.1 Operator panel front ... 317
15.2.2.2 Machine control panel for turning and milling ... 317
15.2.3 Screen saver ... 318

15.3 Interfaces ... 319
15.3.1 Hardware ... 319
15.3.1.1 Overview ... 319
15.3.1.2 Interface assignment for operator panel front ... 319
15.3.1.3 Interface assignment for MCP ... 320
15.3.2 Software ... 322

15.4 Mounting ... 323

15.5 Technical specifications ... 325
15.5.1 Operator panel front ... 325
15.5.2 Machine control panel ... 326

15.6 Replacement parts ... 327

15.6.1 Overview 327
15.6.2 replacement 327
15.6.2.1 Hand wheel 327
15.6.2.2 Rotary switch 328
15.6.2.3 Mouse 331

16 Direct control key module 333

16.1 Description 333
16.2 Operating and display elements 334
16.3 Interfaces 335
16.4 Mounting 337
16.4.1 Overview 337
16.4.2 Combination with OP 012 338
16.4.3 Combination with OP 015A 342
16.4.4 Combination with TP 015A 345

17 PCU 20 349

17.1 Description 349
17.2 Interfaces 352
17.2.1 Right-hand casing side 352
17.2.2 Left-hand casing side 353
17.2.3 Pin assignment of the interfaces 355
17.3 Mounting 356
17.3.1 Preparation for mounting 356
17.3.2 Assembly of PCU and operator panel front 356
17.3.3 Notes on installation 356
17.3.4 Locking the PC card 357
17.3.5 Strain relief 359
17.4 Connectors 360
17.4.1 Overview 360
17.4.2 Ground terminal 361
17.4.3 I/O devices 361
17.4.4 Power Supply 361
17.5 Technical specifications 362
17.6 Accessories 363

18 PCU 50 365

18.1 Description 365
18.2 Interfaces 368
18.2.1 Right-hand casing side 368
18.2.2 Left-hand casing side 369
18.2.3 Casing rear side 370
18.2.4 Pin assignment of the interfaces 370
18.3 Mounting 371
18.3.1 Preparation for mounting 371
18.3.2 Assembly of PCU and operator panel front 372
18.3.3 Assembling the PCU and videolink transmitter 372
18.3.4 Notes on installation 372
18.4 Connectors 374

18.4.1 Ground terminal ... 374
18.4.2 I/O devices ... 374
18.4.3 Power Supply ... 375

18.5 Commissioning ... 376
18.5.1 Power-up ... 376
18.5.2 Changing the ... 376
18.5.3 Changing the BIOS settings ... 379
18.5.4 Calibration of the touch screen ... 380
18.5.5 Use of PC cards ... 382

18.6 Technical specifications ... 384

18.7 Replacement parts ... 385
18.7.1 Overview ... 385
18.7.2 replacement ... 385
18.7.2.1 Hard disk ... 385
18.7.2.2 Power Supply ... 387
18.7.2.3 Device fan ... 388
18.7.2.4 Battery ... 390

18.8 Accessories ... 392
18.8.1 Overview ... 392
18.8.2 Description of components ... 392
18.8.2.1 Mounting bracket ... 392
18.8.2.2 Memory expansion ... 393
18.8.2.3 Expansion boards ... 395

19 PCU 50.3 ... 399

19.1 Description ... 399

19.2 Operating and display elements ... 402

19.3 Interfaces ... 403
19.3.1 External interfaces ... 404
19.3.2 Internal interfaces ... 405
19.3.2.1 Connector assignment of motherboard ... 405
19.3.2.2 Connector assignment of bus board ... 411

19.4 Mounting ... 415
19.4.1 Preparation for mounting ... 415
19.4.2 Assembly of PCU and operator panel front ... 419
19.4.3 Notes on installation ... 420
19.4.4 Mounting the Ethernet tension relief ... 421
19.4.5 Installing the anchor tie ... 423

19.5 Connectors ... 423
19.5.1 Ground terminal ... 423
19.5.2 I/O devices ... 423
19.5.3 DC power supply (24V) ... 424
19.5.4 Equipotential ... 425

19.6 Commissioning ... 426
19.6.1 Locking / unlocking hard disk ... 426
19.6.2 System start ... 427
19.6.3 Switching off / reset ... 427
19.6.4 Calibration of the touch screen ... 428
19.6.5 BIOS ... 430
19.6.5.1 BIOS powering up ... 430
19.6.5.2 Changing the BIOS settings ... 432

19.6.5.3 Status display 433

19.7 Technical specifications 435
19.7.1 PCU 50.3 436
19.7.2 DC power supply module of 24 V (integrated) 436

19.8 Replacement parts 438
19.8.1 Overview 438
19.8.2 replacement 438
19.8.2.1 Hard disk drive 438
19.8.2.2 Power supply 439
19.8.2.3 Power supply module fan 441
19.8.2.4 Device fan 442
19.8.2.5 Battery 443

19.9 Accessories 446
19.9.1 Overview 446
19.9.2 Installing and removing expansion modules 447
19.9.2.1 Memory expansion 447
19.9.2.2 PCI cards 449
19.9.2.3 CompactFlash card 452

20 PCU 70 455

20.1 Description 455

20.2 Interfaces 458
20.2.1 Right-hand casing side 458
20.2.2 Left-hand casing side 459
20.2.3 Casing rear side 459
20.2.4 Pin assignment of the interfaces 459

20.3 Mounting 460

20.4 Connectors 461
20.4.1 Ground terminal 461
20.4.2 I/O devices 461
20.4.3 Power Supply 462

20.5 Commissioning 463

20.6 Technical specifications 464

20.7 Replacement parts 465

20.8 Accessories 466
20.8.1 Overview 466
20.8.2 Description of components 466
20.8.2.1 External floppy disk drive 466
20.8.2.2 Memory expansion 467
20.8.2.3 Expansion boards 467

21 Videolink (VL) 469

21.1 Description 469
21.1.1 Validity 469
21.1.2 Overview 470
21.1.3 Configurations 471
21.1.4 Components 474
21.1.4.1 Overview 474
21.1.4.2 Videolink receiver 475
21.1.4.3 Videolink transmitter 476

21.1.4.4 Cable ... 477

21.2 Control and monitoring elements ... 479
21.2.1 Videolink transmitter ... 479
21.2.2 Videolink receiver ... 480
21.2.3 Operator panel interlock ... 481

21.3 Interfaces ... 482
21.3.1 Overview ... 482
21.3.2 Interface pin assignment for videolink transmitter ... 483
21.3.3 Interface assignment for videolink receiver ... 483
21.3.4 Pin assignment of the interfaces ... 484

21.4 Mounting ... 485
21.4.1 Videolink transmitter to PCU ... 485
21.4.1.1 Flat mounting ... 485
21.4.1.2 Upright mounting ... 490
21.4.1.3 Central mounting on operator panel front ... 492
21.4.2 Videolink receiver on operator panel front ... 493

21.5 Connectors ... 495
21.5.1 Cable connections ... 495
21.5.2 Power Supply ... 495

21.6 Technical specifications ... 496
21.6.1 Operator panel front ... 496
21.6.2 PCU 50 / PCU 70 ... 496
21.6.3 Videolink transmitter ... 496
21.6.4 Videolink receiver ... 497

22 Thin Client Unit (TCU) ... 499

22.1 Description ... 499
22.1.1 Overview ... 400
22.1.2 Configurations ... 500

22.2 Interfaces ... 503

22.3 Mounting the TCU on the operator panel front ... 505

22.4 Technical data ... 508

22.5 Accessories ... 509

23 Handheld Terminal HT 6 ... 511

23.1 Description ... 511

23.2 Operator controls and indicators ... 513
23.2.1 View ... 513
23.2.2 Description ... 514

23.3 Interfaces ... 515

23.4 Connectors ... 521

23.5 Unplugging/plugging during operation ... 523

23.6 Commissioning ... 527
23.6.1 Standard configuration (without MCP) ... 527
23.6.2 Interface signals ... 528

23.7 Distributor for handheld unit ... 531
23.7.1 Overview ... 531

23.7.2 Distributor for 3-core enabling cable (Order No. 6FX2006–1BC01) 532
23.7.3 Distributor box for 4-core enabling cable (order no. 6FX2006–1BH01) 535
23.8 Technical specifications 539
23.9 Replacement parts 540
23.9.1 Overview 540
23.9.2 replacement 540
23.9.2.1 Front with keyboard 540
23.9.2.2 Emergency stop button and rotary override switch 541
23.10 Accessories 545
23.10.1 Overview 545
23.10.2 Slide-in labels 545
23.10.2.1 replacement 545
23.10.2.2 Labeling 547
24 Handheld Terminal HT 8 549
24.1 Description 549
24.2 Unplugging/plugging during operation 551
24.3 Technical specifications 555
24.4 Spare parts 556
24.5 Operator controls and indicators 557
24.5.1 View 557
24.5.2 Description 559
24.5.3 Screen brightness control 561
24.6 Interfaces 562
24.6.1 Overview 562
24.6.2 Description 562
24.7 Connectors 565
24.7.1 Overview 565
24.7.2 MPP 483HTC 565
24.7.3 Connecting cable 566
24.7.4 Power Supply 569
24.7.5 Terminal Box PN 570
24.7.5.1 Features 570
24.7.5.2 Terminal box Plus PN 572
24.7.5.3 Terminal box Basic PN 573
24.7.5.4 Interface assignments 574
24.7.6 Connection module Basic PN 574
24.7.6.1 Features 574
24.7.6.2 Dimension drawing 576
24.7.6.3 Interfaces 577
24.7.6.4 Installing the dummy plug 580
24.8 Accessories 582
24.8.1 Overview 582
24.8.2 Wall holder 582
25 Mini handheld unit 585
25.1 Description 585
25.2 Operator controls and indicators 586
25.2.1 View 586

25.2.2 Description ... 587
25.3 Connection ... 589
25.4 Configuring ... 593
25.5 Technical data ... 594
25.6 Spare parts ... 595
25.7 Accessories ... 597
26 Handheld unit / distributor box ... 559
26.1 Description ... 559
26.2 Operator controls and indicators ... 600
26.2.1 View ... 600
26.2.2 Description ... 602
26.3 Connectors ... 604
26.3.1 Connecting a device ... 604
26.3.2 Connecting several devices ... 605
26.4 Unplugging/plugging during operation ... 606
26.5 Commissioning ... 609
26.5.1 Settings in handheld unit ... 609
26.5.2 Configuring ... 611
26.5.3 Interface signals ... 612
26.6 Distributor box for handheld unit ... 620
26.6.1 Overview ... 620
26.6.2 Interfaces ... 621
26.6.3 Mounting ... 624
26.6.4 Connections ... 624
26.7 Technical data ... 626
26.8 Spare parts ... 627
26.9 Accessories ... 628
27 Machine control panel: MCP 483C ... 629
27.1 Description ... 629
27.2 Operator controls and indicators ... 630
27.2.1 Front ... 630
27.2.2 Rear side ... 632
27.3 Interfaces ... 633
27.4 Mounting ... 635
27.5 Settings ... 637
27.6 Connectors ... 640
27.7 Technical specifications ... 641
27.8 Replacement parts ... 642
27.8.1 Overview ... 642
27.8.2 replacement ... 642
27.9 Accessories ... 643
28 Machine control panel: MCP 483 ... 645

28.1 Description 645
28.2 Operator controls and indicators 647
28.2.1 Front 647
28.2.2 Rear side 649
28.3 Interfaces 651
28.4 Mounting 655
28.5 Settings via DIP switch S3 657
28.6 Connection via PROFIBUS DP 660
28.6.1 Overview 660
28.6.2 Prerequisites 660
28.6.3 Functions of the machine control panel 661
28.6.4 Configuring the DP slave MCP 663
28.6.5 Linking the DP slave MCP 667
28.6.6 Input/output image of DP slave MCP 670
28.7 Technical specifications 673
28.8 Replacement parts 674
28.8.1 Overview 674
28.8.2 replacement 675
28.9 Accessories 676
28.9.1 Overview 676
28.9.2 Membrane keyboard: Labeling the slide-in labels 677
29 Machine control panel: MCP 310 683
29.1 Description 683
29.2 Operator controls and indicators 685
29.2.1 Front side 685
29.2.2 Rear side 686
29.3 Interfaces 687
29.4 Mounting 688
29.5 Settings via DIP switch S3 690
29.6 Connection via PROFIBUS DP 693
29.6.1 Overview 693
29.6.2 Prerequisites 693
29.6.3 Functions of the machine control panel 694
29.6.4 Configuring the DP slave MCP 695
29.6.5 Linking the DP slave MCP 700
29.6.6 Input/output image of DP slave MCP 703
29.7 Technical specifications 706
29.8 Replacement parts 707
29.8.1 Overview 707
29.8.2 replacement 707
29.9 Accessories 708
29.9.1 Overview 708
29.9.2 Labeling the slide-in labels 709
29.9.3 Inserting the slide-in label "Part1" 716
30 Machine control panel: OP 032S 719

30.1 Description ... 719
30.2 Operator controls and indicators ... 720
30.3 Interfaces ... 722
30.4 Mounting ... 728
30.5 Technical specifications ... 729
30.6 Accessories ... 730
31 Machine Pushbutton Panel: MPP 483 ... 731
31.1 Description ... 731
31.1.1 Overview ... 731
31.1.2 System features ... 732
31.1.3 Mechanical design ... 736
31.2 Operator controls and indicators ... 737
31.2.1 Standard versions ... 737
31.2.2 Special versions ... 744
31.2.3 Examples of assignment of free slots ... 745
31.2.4 Description ... 745
31.2.4.1 Device front ... 745
31.2.4.2 Device rear side ... 747
31.3 Interfaces ... 749
31.3.1 Overview ... 749
31.3.2 Description ... 750
31.3.2.1 Control panel ... 750
31.3.2.2 COM board ... 753
31.3.2.3 User keys ... 757
31.3.2.4 Handheld unit connection HT 6 ... 760
31.3.2.5 Handheld unit connection HT 8 ... 763
31.3.3 Connection elements for COM board, customer keys and handheld unit connection ... 766
31.3.4 Input / output images ... 767
31.4 Mounting ... 773
31.5 Connectors ... 776
31.5.1 MPP 483 ... 776
31.5.2 COM board ... 779
31.5.3 Customer keys ... 780
31.5.4 Handheld unit connection HT 6 ... 780
31.5.5 Handheld unit connection HT 8 ... 784
31.6 Circuits and wiring ... 786
31.7 Initialization ... 791
31.8 Communication ... 794
31.8.1 MPI Communication ... 794
31.8.2 PROFIBUS communication ... 795
31.8.2.1 Prerequisites ... 795
31.8.2.2 Configuring the DP slave MPP 483 ... 796
31.8.2.3 PLC user program ... 799
31.9 Technical specifications ... 801
31.9.1 MPP 483 ... 801
31.9.2 Input/output interface of individual wiring ... 802
31.10 Spare parts ... 804

31.11 Accessories 805
31.11.1 Overview 805
31.11.2 Labeling the slide-in labels 805
31.11.3 Handwheel connection 809
31.11.4 Retrofit control elements 810
31.12 Service information 812
32 Pushbutton panel: PP 012 815
32.1 Description 815
32.1.1 Overview 815
32.1.2 Interfaces and monitoring 816
32.1.3 Operator panel front interface 817
32.1.4 Function blocks 818
32.2 Operator controls and indicators 823
32.2.2 Description 824
32.2.3 Labeling 825
32.3 Interfaces 827
32.3.1 Overview 827
32.3.2 PP 012 individual wiring 829
32.3.3 Individual wiring PCB input/output 837
32.3.4 PLC interface 841
32.4 Mounting 843
32.5 Connectors 844
32.5.1 PP 012 844
32.5.2 Connection for handheld units 845
32.5.2.1 Terminator and jump button S11 845
32.5.2.2 Functional reliability of EMERGENCY STOP and enabling circuits 845
32.5.2.3 two-channel enabling function 846
32.6 Circuits and wiring 849
32.7 Initialization 855
32.8 Communication between SIMATIC S7 and PP 012 859
32.9 PP 012 expansion 861
32.10 Functions of PCB expansion card 12I/12O 863
32.10.1 Inputs/Outputs 863
32.10.2 Button assignment within matrix 864
32.11 Technical specifications 865
32.11.1 PP 012 865
32.11.2 Input/output interface of individual wiring 866
32.12 Configuring 870
32.12.1 Delivery variants 870
32.12.2 Project-specific components 871
32.12.3 Rating plates 872
32.13 Service information 874
33 MPI interface for customer operator panel 877
33.1 Description 877
33.2 Interfaces 878
33.3 Mounting 884

33.4 Settings ... 885
33.5 Technical specifications ... 887
34 Electronic handwheels ... 889
34.1 Description ... 889
34.2 Connections ... 891
34.3 Technical data ... 892
34.4 Accessories ... 893
34.5 Dimensional drawings ... 894
34.5.1 Encoder with 120 mm x 120 mm front panel, setting wheel (...-5DB01) ... 894
34.5.2 Encoder with front panel, 76.2 mm x 76.2 mm, setting wheel (...-5DC01) ... 896
34.5.3 Encoder without front panel, without setting wheel, mounting (...-5DF01) ... 898
34.5.4 Encoder with front panel, 76.2 mm x 76.2 mm, setting wheel (...-5DH01) ... 900
34.5.5 Encoder without front panel, setting wheel, small (...-5DM00) ... 902
35 Full CNC keyboard: KB 483C ... 905
35.1 Description ... 905
35.2 Operating and display elements ... 906
35.3 Interfaces ... 909
35.4 Mounting ... 910
35.5 Technical data ... 912
35.6 Accessories ... 913
36 Full CNC keyboard: KB 310C ... 915
36.1 Description ... 915
36.2 Operating and display elements ... 916
36.3 Interfaces ... 917
36.4 Mounting ... 918
36.5 Technical data ... 920
36.6 Accessories ... 921
37 Full CNC keyboard: OP 032S ... 923
37.1 Description ... 923
37.2 Operator controls and indicators ... 924
37.3 Interfaces ... 925
37.4 Mounting ... 926
37.5 Technical specifications ... 978
37.6 Accessories ... 928
38 Standard PC keyboard KBPC PX US ... 929
38.1 Description ... 929
38.2 Operator controls and indicators ... 930
38.3 Technical specifications ... 931

39 Standard PC keyboard KBPC CG US 933
39.1 Description 933
39.2 Operator controls and indicators 934
39.3 Technical data 935
40 Standard PC keyboard KBPC USB US 937
40.1 Description 937
40.2 Operating and display elements 938
40.3 Technical data 939
41 Standard PC keyboard KBPC SC US 941
41.1 Description 941
41.2 Technical specifications 942
42 Keyboard tray 943
42.1 Description 943
42.2 Technical data 944
43 Compact FlashCard 945
43.1 Description 945
43.2 Technical data 946
44 3.5" Floppy Disk Drive 947
44.1 Description 947
44.2 Interfaces 949
44.3 Mounting 950
44.4 Technical specifications 952
45 Floppy disk drive 3.5" (USB) 953
45.1 Description 953
45.2 Interfaces 955
45.2.1 Hardware 955
45.2.2 Software 955
45.3 Mounting 956
45.4 Notes about operation 958
45.4.1 Overview 958
45.4.2 Disk drive (6FC5235-0AA05-1AA1) 958
45.4.3 Disk drive (6FC5235-0AA05-1AA2) 959
45.5 Technical specifications 960
45.5.1 Disk drive (6FC5235-0AA05-1AA1) 960
45.5.2 Disk drive (6FC5235-0AA05-1AA2) 961
45.6 Replacement parts 962
46 Card reader with USB interface 963
46.1 Description 963
46.2 Operator controls and indicators 964

46.3 interfaces ... 966
46.4 Installation ... 967
46.5 Memory cards ... 968
46.6 Technical data ... 969
46.7 Accessories ... 970
47 Cooling ... 971
47.1 Methods ... 971
47.2 Sample calculation of thermal power loss ... 973
A ESD guidelines ... 975
B List of abbreviations ... 977
C Appendix ... 981
C.1 Key symbols OP 08T ... 981
C.2 Feedback on the documentation ... 984
C.3 Documentation tree ... 985
Index ... 987

Connection conditions

1

1.1 Secondary electrical conditions

1.1.1 Prerequisites

Compliance with the connection conditions

The controller is tested for compliance with the ambient conditions specified below. Trouble-free operation is only ensured if:

- these ambient conditions are maintained when storing, transporting and operating the equipment.
- Original components and spare parts are used. This applies in particular to the use of specified cables and plug connectors.
- the equipment is correctly installed and commissioned.

⚠ DANGER
The equipment may not be commissioned until it has been clearly identified that the machine in which the controller is installed, is in full conformance with the specifications in EC Directive 98/37/EC.

Additional Information

Literature: /EMC/, EMC Configuration Guideline

Assistance and support

The connection conditions must be carefully maintained while setting up the complete system. Please contact your local Siemens office or representative for any assistance.

Note

Please refer to the documentation for the respective operator components for information on deviations to the standard connection conditions.

1.1.2 Electromagnetic compatibility (EMC)

RI suppression

Applicable standards: EN 61000-6-3 and -4

Table 1-1 Limit values for radio interference suppression in industrial environments

	Limit class according to EN 55011
Conducted radio interference	A (industry)
Interference radiation	A (industry)

Note

The user must consider interference radiation for the whole plant/system. Particular attention should be paid to cabling. Please contact your sales representative for assistance and support.

If compliance with limit class B (residential areas) is required, please contact your local Siemens office or sales representative.

Interference immunity and low-frequency phenomena

Applicable standard: EN 61000-6-2

Tested phenomena	Applicable standards
Static discharge	EN 61000-4-2
High-frequency radiation	EN 61000-4-3
Noise immunity (burst)	EN 61000-4-4
Surge voltages	EN 61000-4-5
Cables subject to HF radiation	EN 61000-4-6
Magnetic fields with electrical power frequencies	EN 61000-4-8
Voltage dips and interruptions	EN 61000-4-11 and EN 61000-6-2
Commutation dips	EN 60146-1-1
Harmonic currents	EN 61000-3-2
Voltage fluctuations and flickers	EN 61000-3-3

1.1.3 Power supply

Requirements of AC power supply

The AC power supply is only required for external devices and accessories and is not included in the standard delivery kit.

Table 1-2 Requirements of AC power supply

Rated voltage	acc. to EN 61000-2-4 Frequency Powering up time when switched on	AC 230 V ∓ 30% 50/60 Hz ∓ 10% any
Harmonic content	According to EN 61000-2-4	≤ 10%
Transient voltage interruptions	Downtime Recovery time Events per hour	≤ 3 ms ≥ 10 s ≤ 10

Requirements of DC power supply

⚠DANGER

The DC power supply is always referenced to ground and may not be generated by an autotransformer.

User interfaces are powered via a DC power supply with protective separation according to EN 61800-5-1.

In the case of supply lines > 10 m, protectors must be installed at the device input in order to protect against lightning (surge).

The DC power supply must be connected to the ground/shield of the NC for EMC and/or functional reasons. For EMC reasons, this connection should only be made at one point. As a rule, the connection is provided as standard in the S7-300 I/Os. In exceptional circumstances when this is not the case, the ground connection should be made on the grounding rail of the NC cabinet (also refer to /EMC/EMC Installation Guide.)

Table 1-3 Requirements of the DC power supply

Rated voltage	According to EN 61131-2 Voltage range (mean value) Voltage ripple, peak/peak Powering up time when switched on	24 V DC 20.4 V DC to 28.8 V DC 5% (unsmoothed 6-pulse alignment) any
Non-periodic overvoltages	 Period of overvoltage Recover time Events per hour	≤ 35 V ≤ 500 ms ≥ 50 s ≤ 10
Transient voltage interruptions	Downtime Recovery time Events per hour	≤ 3 ms ≥ 10 s ≤ 10

1.1.4 Safe isolation to EN 61800-5-1

The complete system includes user interfaces (UIs) and interfaces for servicing, startup and maintenance.

User interfaces (UIs)

UIs are all the interfaces that are freely accessible to the machine operator without the need for tools or aids. These user interfaces are designed with safe isolation to EN 61800-5-1.

Interfaces for servicing, startup and maintenance

⚠DANGER

The interfaces for servicing/installation and start-up/maintenance purposes are provided **without** protective separation.

If necessary, these interfaces can be isolated safely using a supplementary adapter (insulation voltage 230 V AC). Although these adapters are not included in the Siemens scope of delivery, you can buy these parts from your local dealer, who will be happy to advise you.

⚠DANGER

Safe isolation can only be ensured if the system configuration specified below is strictly adhered to. When mounting additional components (e.g. S7-300 FM, IP) with an end user interface, please make sure that the end user interface has a basic insulation for at least 230 V AC.

The following figure shows the potential isolation of the 840D/611D/S7-300 system.

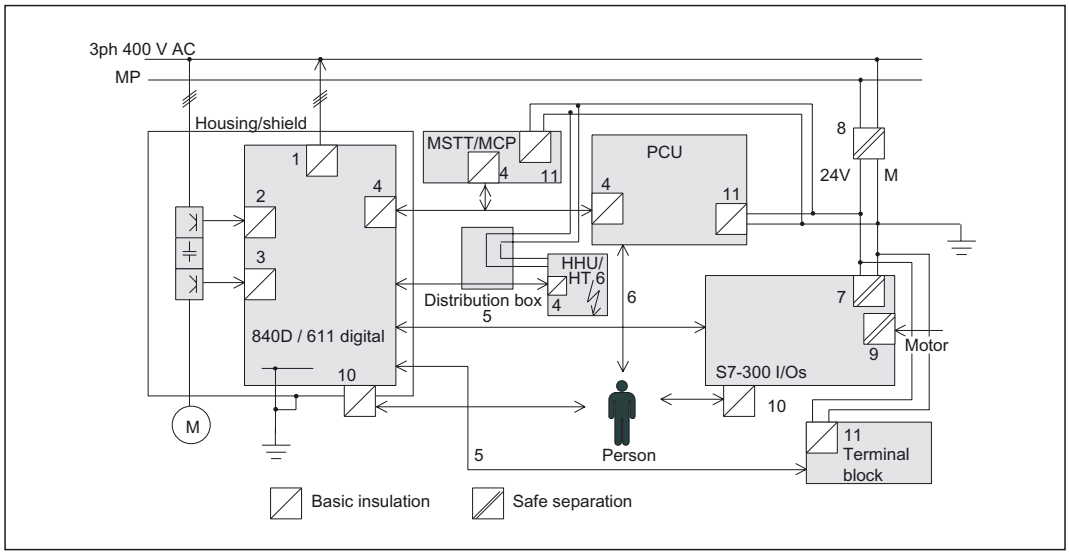

Figure 1-1 Safe isolation to EN 61800-5-1

1. Floating power supply of the SIMODRIVE electronics unit with 230 V AC basic insulation.
2. Floating transistor triggers for the three-phase rectifier bridge with 230 V AC basic insulation.
3. Floating transistor triggers for each axis of the three-phase inverter bridge with 230 V AC basic insulation.
4. Floating signal connections from the NC to the PCU or HHU with 230 V AC basic insulation.
5. Non-floating signal line between NC and I/O devices.
6. Non-floating end user interface with protective separation for 230 VAC through interfaces 1 to 4 and 7.
7. Protectively separated 5 V DC power supply, fed from a protectively separated 24 V DC supply.
8. 24 V DC power supply unit for external devices and for the machine adaptation control according to applicable standards in the form of a PELV circuit (Protective Extra Low Voltage), provided with protective separation.
9. Floating interfaces to the machine (not accessible to the end user)
10. Floating signal interfaces directly accessible to the end user (e.g., V.24). For these interfaces, you must always make sure that there is either safe isolation with respect to the line supply voltage or that there are two basic insulation levels, for 230 V AC each.
11. 5 V DC power supply with basic insulation, fed from a safely-isolated 24 V DC supply.

1.1.5 Grounding concept

The grounding concept is described below using a SINUMERIK 840D as an example. The 840D system consists of a number of individual components, each of which must comply with EMC and the appropriate safety standards.
The individual system components are:

- NCU box
- Machine control panel MCP
- Keyboard
- Operator panels (operator panel front + PCU)
- NCU terminal block
- Distributor box and handheld unit
- S7-300 I/O with IM 361 interface module
- Single I/O module

The NCU box is a 50 mm wide cassette that is integrated into the infeed/regenerative feedback (I/RF) unit, FD and MSD.

The individual modules are attached to a metal cabinet panel by means of screws. Make sure that near the screws a low-impedance contact of the NCU box with the cabinet wall can be made. Insulating paint must be removed from the connecting point.

The electronic grounding points of the modules are interconnected via the device and drive bus and at the same time connected to the X131 terminal of the I/RF module.

The ground and module ground M should be connected at the power supply terminal of the IM 361. Furthermore, for the single I/O module, "SHIELD" and "M24" must be connected in connector X1.

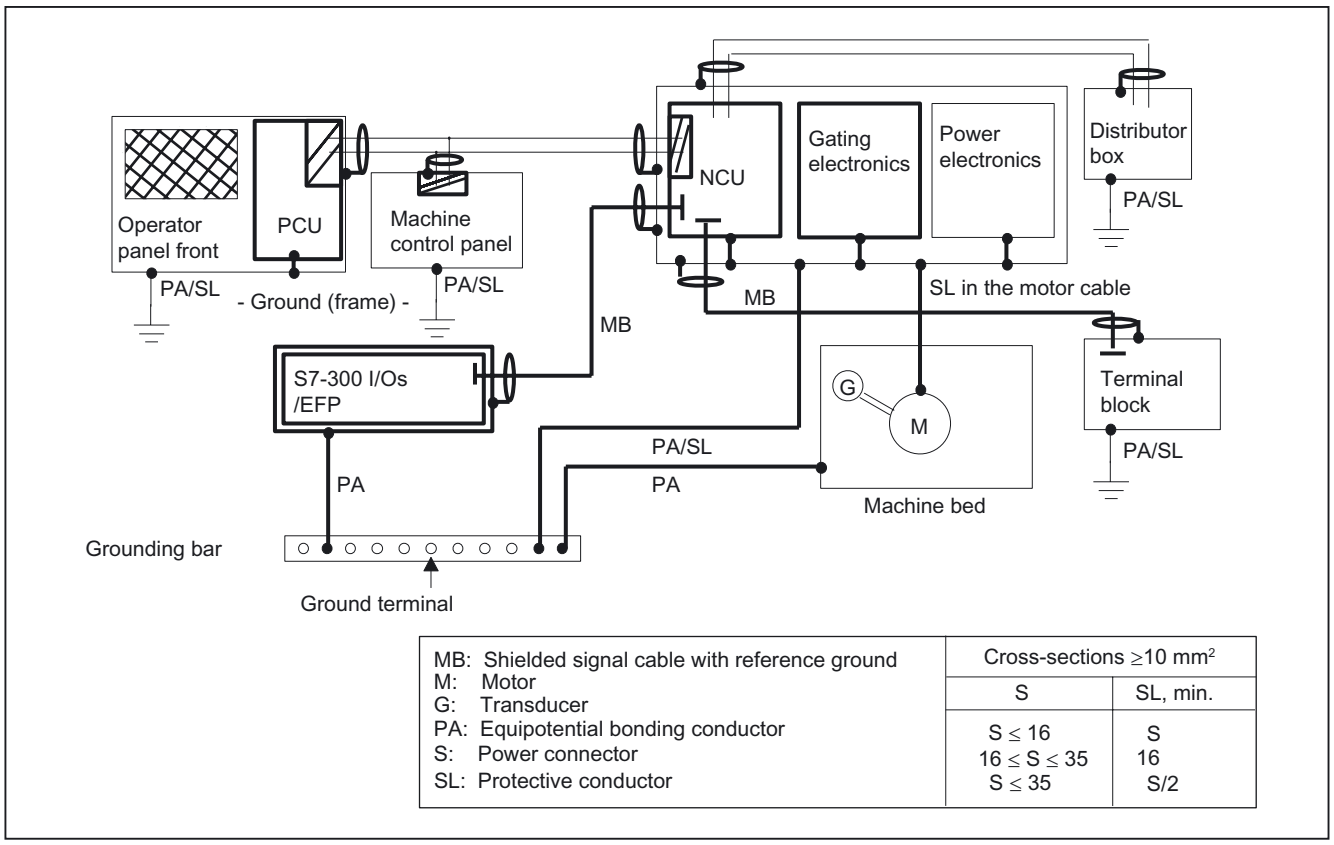

MB: Shielded signal cable with reference ground M: Motor G: Transducer PA: Equipotential bonding conductor S: Power connector SL: Protective conductor	Cross-sections ≥10 mm²	
	S	SL, min.
	S ≤ 16	S
	16 ≤ S ≤ 35	16
	S ≤ 35	S/2

Figure 1-2 Grounding concept

References: /EMC/EMC Installation Guide

1.1.6 RI suppression measures

In addition to the protective grounding of system components, special precautions must be taken to ensure safe, interference-free operation of the system. These measures include shielded signal cables, special equipotential bonding and grounding conductors.

Shielded signal cables

To ensure safe, fault-free operation of the system, it is essential to use the cables specified in the individual diagrams.

For digital signal transmission, the shield must have a conductive connection at both sides of the housing.

Exception:

- Standard shielded cables grounded on only one side can be used for devices from other manufacturers (printers, programming devices, etc.). These external devices may not be connected to the control during normal operation. However, if the system cannot be operated without them, then the cable shields must be connected at both ends. Furthermore, the external device must be connected to the control via an equipotential bonding cable.

Cable definition

Definition:

- Signal cables (example)
  - Data cables (MPI, sensor cables, etc.)
  - Binary inputs and outputs
  - EMERGENCY OFF lines
- Load cables (example)
  - Low-voltage supply cables (230 V AC, +24 V DC etc.)
  - Supply cables to contactors (primary and secondary circuit)

References: /EMC/EMC Installation Guide

Rules for routing cables

In order to achieve the best-possible noise immunity for the complete system (control, power section, machine) the following EMC measures must be observed:

- Signal cables and load cables must be routed at the greatest possible distance from one another.
- If necessary, signal and load cables may cross one another (if possible, at an angle of 90°), but must never be laid close or parallel to one another.
- Only cables provided by the NC manufacturer should be used as signal cables from and to the NC or PLC.
- Signal cables may not be routed close to strong external magnetic fields (e.g. motors and transformers).
- Pulse-carrying HC/HV cables must always be laid completely separately from all other cables.

- If signal lines cannot be routed a sufficient distance away from other cables, they must be installed in grounded cable ducts (metal).
- The clearance (interference injection area) between the following lines must be kept to a minimum:
  – Signal cable and signal cable (twisted)
  – Signal line and associated equipotential bonding conductor
  – Equipotential bonding conductor and PE conductor (routed together)

Note

More information on RI suppression measures and connecting shielded cables can be found in the
References: /EMC/EMC Installation Guide

1.1.7 Pin assignment of the interfaces

The pins of the component interfaces are generally assigned as specified in the tables below. Any deviations are indicated at the relevant point.

Signal type:

I	Input
O	Output
B	Bi-directional (inputs/outputs)
V	Power supply
-	Ground (reference potential) or N.C. (not connected)

Parallel interface LPT1

Parallel interface on the PCU 50 / 70 for connecting a printer, for example

Table 1-4 Assignment of the parallel interface LPT1

Connector	Pin	Name	Type	Remarks
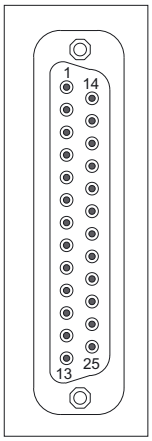	1	Strobe (CLK)	O	Open Collector
	2-9	Data bits 0, ..., 7		TTL level
	10	ACK (ACKNOWLEDGE)	I	4.7 kΩ Pull Up
	11	BUSY		
	12	PE (PAPER END)		
	13	SELECT		
	14	AUTO FEED	O	Open Collector
	15	ERROR	I	4.7 kΩ Pull Up
	16	INT	O	Open Collector
	17	SELECT IN		
	18-25	GND	-	Ground (reference potential)

Serial interface COM1

Serial interface on PCU 20 / 50 / 70 / HT 6

Table 1-5 Assignment of the serial interface COM1 (AG/V.24/modem)

Connector	Pin	Name	Type	Remarks
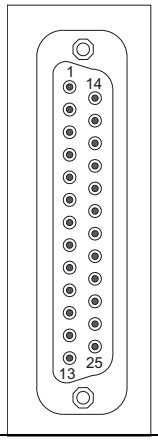	1	-	-	Shield
	2	TxD (D1)	O	Serial transmitted data
	3	RxD (D2)	I	Serial received data
	4	RTS (S2)	O	Request To Send
	5	CTS (M2)	I	Clear To Send
	6	DSR (M1)		Data Set Ready
	7	GND (E2)	-	Ground (reference potential)
	8	DCD (M5)	I	Receive signal level (carrier)
	9-19	N.C.	-	Do not use
	20	DTR (S1)	O	Data Terminal Ready
	21	N.C.	-	Do not use
	22	RI (M3)	|	Incoming call
	23-25	N.C.	-	Do not use

Serial interface COM2

Serial interface on PCU 20 / 50 / 70 / HT 6

Table 1-6 Assignment of the serial interface COM2 (V.24/mouse)

Connector	Pin	Name	Type	Remarks
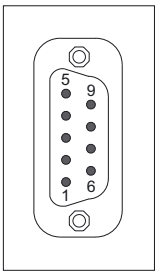	1	DCD (M5)	I	Receive signal level (carrier)
	2	RxD (D2)		Serial received data
	3	TxD (D1)	O	Serial transmitted data
	4	DTR (S1)		Data Terminal Ready
	5	GND (E2)	-	Ground (reference potential)
	6	DSR (M1)	I	Data Set Ready
	7	RTS (S2)	O	Request To Send
	8	CTS (M2)	I	Clear To Send
	9	RI (M3)		Incoming call

PS/2 interfaces

Table 1-7 Assignment of the PS/2 interfaces (keyboard/mouse interface)

Connector (view of socket)	Pin	Name	Type	Remarks
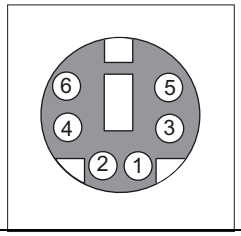	1	Keyboard_data	I	Keyboard data cable
	2	Mouse_data		Mouse data cable
	3	GND	V	Ground (reference potential)
	4	P5V_fused		+5 V (fused)
	5	Keyboard_CLK	B	Keyboard clock line
	6	Mouse_CLK		Mouse clock line

USB-A interface

Table 1-8 Assignment of the USB-A interface

Connector (view of socket)	Pin	Name	Type	Remarks
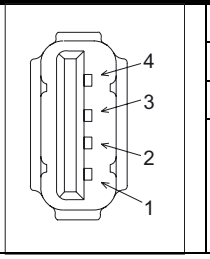	1	USB-P5V_fused	V	+5 V (fused)
	2	USB_D0M	B	Data-, USB channel 0
	3	USB_D0P		Data+, USB channel 0
	4	USB_GND	V	Ground (reference potential)

MPI/DP interface

Table 1-9 Assignment of the MPI/DP interface

Connector	Pin	Name	Type	Remarks
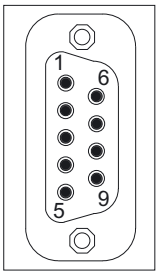	1,2	N.C.	-	Do not use
	3	LTG_B	B	Signal line B of MPI module
	4	RTS_AS	I	Control signal for receive data current. Signal 1 active if directly connected interface module is sending.
	5	M5EXT	VO	Return line (GND) of 5 V supply. Current load from a load of 90 mA max. connected between P5EXT and M5EXT.
	6	P5EXT	VO	5 V supply (current load see M5EXT)
	7	N.C.	-	Do not use
	8	LTG_A	B	Signal line A of MPI module
	9	RTS_PG	O	RTS signal of MPI module; signal is "1", when PG is sending
	Shield		-	On connector housing

Ethernet RJ45 interface

Table 1-10 Assignment of the Ethernet RJ45 interface

Connector	Pin	Name	Type	Remarks
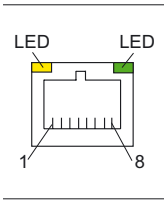	1	TxD+	O	Send data
	2	TxD-		
	3	RxD+	I	Received data
	4/5	GND	-	- (terminated internally with 75 Ω; not required for data transmission)
	6	RD-	I	Received data
	7/8	GND	-	- (terminated internally with 75 Ω; not required for data transmission)
	Shield			On connector housing
		*) green LED (on right)		Off: 10 Mbps Lit: 100 Mbit/s
		*) LED yellow (on left)		Lit: Active connection (e.g. to a hub) Flashing: Activity
*) if present				

VGA Port

Table 1-11 Assignment of VGA interface

Connector	Pin	Name	Type	Remarks
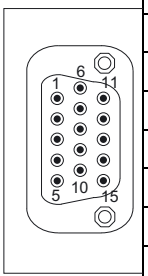	1	R	O	Red
	2	G		Green
	3	B		Blue
	4	N.C.	-	Do not use
	5-8	GND		System ground (reference potential)
	9	5 V	VO	+5 V (fused)
	10	GND	VO	System ground (reference potential)
	11	N.C.	-	Do not use
	12	DDC_DAT	B	DDC data line
	13	EXT_H	O	Horizontal synchronization
	14	EXT_V		Vertical synchronization
	15	DDC_CLK	B	DDC clock line

DVI-I interface

Table 1-12 Assignment of DVI-I interface

Connector	Pin	Name	Type	Remarks
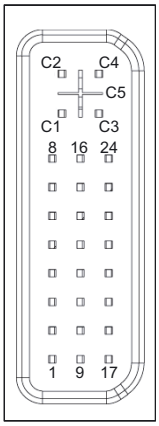	S	GND	-	Ground
	S1	GND	-	Ground
	C1	R	O	Red
	C2	G		Green
	C3	B		Blue
	C4	HSYNC	O	Horizontal synchronizing pulse
	C5	GND	-	Ground
	CSA	GND	-	Ground
	1	TX2N	O	TDMS data 2-
	2	TX2P		TDMS data 2+
	3	GND	-	Ground
	4	N.C.	-	Do not use
	5	N.C.	-	Do not use
	6	DDC CLK	B	DDC clock
	7	DDC CLK		DDC data
	8	VSYNC	O	Vertical synchronizing pulse
	9	TX1N	O	TDMS data 1-
	10	TX1P		TDMS data 1+
	11	GND	-	Ground
	12	N.C.	-	Do not use
	13	N.C.	-	Do not use
	14	+5 V	VO	+5 V
	15	GND	VO	Ground
	16	MONDET	I	Hot plug detect
	17	TX0N	O	TDMS data 0-
	18	TXoP		TDMS data 0+
	19	GND	-	Ground
	20	N.C.	-	Do not use
	21	N.C.	-	Do not use
	22	GND	-	Ground
	23	TXCP	O	TDMS clock +
	24	TXCN		TDMS clock -

C-MOS display interface

D-STN and TFT displays with 5V CMOS interface and VGA resolution (640 x 480 pixels) can be connected to this interface.
Maximum cable length: 50 cm.

Table 1-13 Assignment of the display interface (C-MOS)

Pin	DSTN name	DSTN meaning	TFT name	TFT meaning	
1/2	P5V_D-fused	+ 5 V (fused) Display VCC	P5V_D_fused	+ 5 V (fused) Display VCC	
3	GND	-	GGND	-	
4	CLK	Shift clock	CLK	Shift clock	
5	GND	-	GND	-	
6	LP	Horiz. Sync	Hsync	Horiz.	Sync
7	FP	Vert. Sync	Vsync	Vert.	
8	-	-	R0	Signal	Red bit 0 (LSB)
9	-	-	R1		Red bit 1
10	UD6	Upper data bit 6	R2		Red bit 2
11	GND	-	GND	-	
12	UD7	Upper data bit 7	R3	Signal	Red bit 3
13	UD2	Upper data bit 2	R4		Red bit 4
14	UD3	Upper data bit 3	R5		Red bit 5 (MSB)
15	GND	-	GND	-	
16	UD1	Upper data bit 1	G0	Signal	Green bit 0 (LSB)
17	UD0	Upper data bit 0	G1		Green bit 1
18	LD3	Lower data bit 6	G2		Green bit 2
19	GND	-	GND	-	
20	LD2	Lower data bit 2	G3	Signal	Green bit 3
21	LD1	Lower data bit 1	G4		Green bit 4
22	LD0	Lower data bit 0	G5		Green bit 5 (MSB)
23	GND	-	GND	-	
24	UD5	Lower data bit 5	B0	Signal	Blue bit 0 (LSB)
25	UD4	Lower data bit 4	B1		Blue bit 1
26	LD7	Lower data bit 7	B2		Blue bit 2
27	GND	-	GND	-	
28	LD6	Lower data bit 6	B3	Signal	Blue bit 3
29	LD5	Lower data bit 5	B4		Blue bit 4
30	LD4	Lower data bit 4	B5		Blue bit 5 (MSB)
31	VCON	Contrast voltage	-	-	
32	M (GND)	Data enable	ENAB	Data enable	
33	DispOn	Display ON	DsipOn	Display ON	
34	Res.	Reserved	Res.	Reserved	

I/O USB interface

All signals required for connecting operator panel fronts, with the exception of the display interface, are assigned to this interface.

Associated interface cable: K1
Plug-connector type: 2 x 13-pin socket connector

Table 1-14 Allocation of the I/O USB interface

Connector	Pin	Name	Type	Meaning	
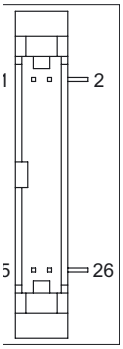	1	GND	VO	Ground	
	2	P12C		+power supply for backlight inverter	
	3	BL_ON	O	Backlight On	
	4	P5V_fused	VO	+5 V VCC (fused in A&D PC)	
	5	GND	VO	Ground	
	6	P3V3_fused	VO	+3.3 V VCC (fused in A&D PC)	
	7 - 10	N.C.	-	Do not use	
	11	P5V_fused	VO	+5 V VCC (fused in A&D PC)	
	12	USB_D1M	B	USB data- Channel 1	
	13	USB_D1P		USB data+ Channel 1	
	14	GND	VO	Ground	
	15	LCD_SEL0	I	Display type select signal	1
	16	LCD_SEL1			2
	17	LCD_SEL2			3
	18	LCD_SEL3			4
	19	RESET_N		Reset signal (low active)	
	20	reserved	-	Reserved	
	21	HD_LED *)	O	HD LED, anode with 1 kΩ in series on the motherboard	
	22	DP_LED *)	O	MPI/DP LED, anode via 1 KΩ in series on the motherboard	
	23	Ethernet_LED *)	O	Ethernet LED, anode with 1 kΩ in series on the motherboard	
	24	TEMP_ERR	O	LED temperature sensor; anode with 1 kΩ in series on the board	
	25	RUN_R *)	O	Watchdog error LED, anode with 1 kΩ in series on the motherboard	
	26	RUN_G *)	O	Watchdog OK LED, anode with 1 kΩ in series on the motherboard	

*) Signal only applies for PCU 50.3, otherwise it is N.C.

LVDS display interface channel 1

Used to connect operator panel fronts with TFT displays with 640 x 480 pixels (VGA), 800 x 600 pixels (SVGA) or 1024 x 768 pixels (XGA).

Associated interface cable: K2, max. length: 0.5 m

Plug-connector type: 2 x 10-pin socket connector

Table 1-15 Allocation of the LVDS display interface

Connector	Pin	Name	Type	Meaning	
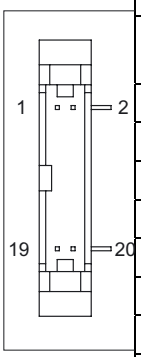	1/2	P5V_D_fused	VO	+5V display power supply (fused in A&D PC)	
	3	RXIN0-	I	LVDS input signal	Bit 0 (-)
	4	RXIN0+			Bit 0 (+)
	5/6	P3V3_D_fused	VO	+3.3V display power supply (fused in A&D PC)	
	7	RXIN1-	I	LVDS input signal	Bit 1 (-)
	8	RXIN1+			Bit 1 (+)
	9/10	GND	-	System ground (reference potential)	
	11	RXIN2-	I	LVDS input signal	Bit 2 (-)
	12	RXIN2+			Bit 2 (+)
	13/14	GND	-	System ground (reference potential)	
	15	RXCLKIN-	O	LVDS cycle clock signal	(-)
	16	RXCLKIN+			(+)
	17/18	GND	-	System ground (reference potential)	
	19/20	N.C.		Do not use	

LVDS display interface channel 2

Used for expanding the LVDS display interface channel 1 to control TFT displays with 1280 x 1024 pixels (SXGA).

Associated interface cable: K3

Plug-connector type: 2 x 10-pin socket connector

Table 1-16 Allocation of the LVDS display interface

Connector	Pin	Name	Type	Meaning	
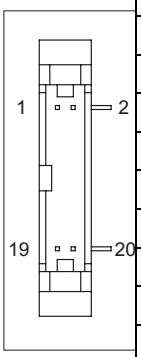	1/2	GND	-	System ground (reference potential)	
	3	RXIN10-	I	LVDS input signal	Bit 0 (-)
	4	RXIN10+			Bit 0 (+)
	5/6	GND	-	System ground (reference potential)	
	7	RXIN1-	I	LVDS input signal	Bit 1 (-)
	8	RXIN1+			Bit 1 (+)
	9/10	GND	-	System ground (reference potential)	
	11	RXIN2-	I	LVDS input signal	Bit 2 (-)
	12	RXIN2+			Bit 2 (+)
	13/14	GND	V	Ground	
	15	RXCLKIN-	O	LVDS cycle clock signal	(-)
	16	RXCLKIN+			(+)
	17	GND	V	Ground	
	18-20	P12VF	VO	+12 V fused	

Compact Flash interface

Table 1-17 Assignment of the Compact Flash interface

Connector	Pin	Name	Type	Meaning
	1	GND	VO	Ground
	2	IDE_D3	I/O	data bit 3
	3	IDE_D4		data bit 4
	4	IDE_D5		data bit 5
	5	IDE_D6		data bit 6
	6	IDE_D7		data bit 7
	7	IDE_XCS0	O	chip select 0
	8	IDE_A10 (GND)	VO	Address bit 10 to ground
	9	XOE / ATA/ XSEL (GND)	O	Enables True IDE mode

Connector	Pin	Name	Type	Meaning
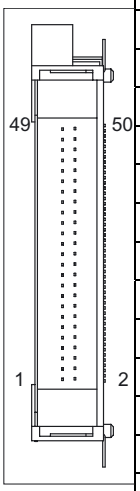	10	IDE_A9 (GND)	VO	Address bit 9 to ground
	11	IDE_A8 (GND)		Address bit 8 to ground
	12	IDE_A7 (GND)		Address bit 7 to ground
	13	P3V3	VO	+ 3.3V power
	14	IDE_A6 (GND)	VO	Address bit 6 to ground
	15	IDE_A5 (GND)		Address bit 5 to ground
	16	IDE_A4 (GND)		Address bit 4 to ground
	17	IDE_A3 (GND)		Address bit 3 to ground
	18	IDE_A2	O	Address bit 2
	19	IDE_A1		Address bit 1
	20	IDE_A0		Address bit 0
	21	IDE_D0	I/O	data bit 0
	22	IDE_D1		data bit 1
	23	IDE_D2		data bit 2
	24	IDE_XIOCS16	I	I/O chip select 16
	25	IDE_XCD2 (N.C.)	-	Do not use
	26	IDE_XCD1	I	card detect
	27	IDE_D11	I/O	data bit 11
	28	IDE_D12		data bit 12
	29	IDE_D13		data bit 13
	30	IDE_D14		data bit 14
	31	IDE_D15		data bit 15
	32	IDE_XCS1	O	chip select 1
	33	XVS1 (N.C.)	-	Voltage sense (unassigned)
	34	IDE_XIOR	O	I/O read
	35	IDE_XIOW		I/O write
	36	DIE_XWE	O	Write enable
	37	IDE_XIRQ	I	Interrupt request
	38	P3V3	VO	+ 3.3V power
	39	XCSEL	O	Cable select
	40	XVS2 (N.C.)	-	Voltage sense (unassigned)
	41	IDE_XRST	O	reset
	42	IDE_XIORDY	I	I/O ready
	43	DMARQ	I	DMA request
	44	XDMACK	O	DMA acknowledge
	45	XDASP (N.C.)	-	drive active/slave present (unassigned)
	46	IDE_XPDIAG	I/O	Passed diagnostic
	47	IDE_D8	I/O	data bit 8
	48	IDE_D9		data bit 9
	49	IDE_D10		data bit 10
	50	GND	VO	Ground

Power supply interface

Table 1-18 Assignment of the power supply interface

	Pin	Name	Type	Meaning
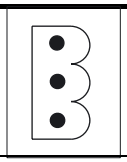	1	SHIELD	-	Shield potential
	2	M24	VI	Ground 24V
	3	P24		24 V DC potential

1.1.8 Handling membrane connectors

When replacing parts it can sometimes be necessary to disconnect membrane connectors from the boards and reconnect them again.

This should be done as follows:

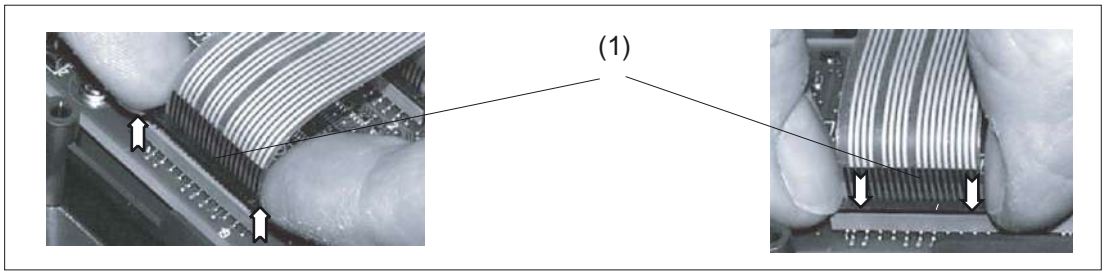

Figure 1-3 Removing (left) and attaching (right) a membrane connector

(1) Clamping frame of socket

Unplugging the membrane connector

1. Loosen the dark clamping frame of the socket by pushing it up with your fingernails until it engages in its upper, unlocked position (Fig. left).
2. Carefully pull off the membrane connector upward.

Plugging in the membrane connector

1. With the clamping frame in the upper position, carefully plug the membrane connector into the socket.
2. Lock it in place by pushing down the clamping frame (Figure right).

1.2 Ambient climatic and mechanical conditions

1.2.1 Relevant standards

Test standards

Vibratory load:	EN 60068–2–6
Shock load:	EN 60068–2–27
Climate:	EN 60068–2–1/EN 60068–2–2/EN 60068–2–14 EN 60068–2–30/EN 60068–2–31/EN 60068–2–32/ EN 60068–2–33/EN 60068–2–34

Requirements standards

Long-term storage:	EN 60721–3–1
Transport:	EN 60721–3–2
Stationary operation:	EN 60721–3–3

Table 1-19 Mechanical ambient conditions

	Requirement criteria	Values
Vibratory load	Frequency range	see technical data of the relevant component
	Constant deflection	
	Acceleration amplitude	
Shock stressing	Acceleration	
	Duration of nominal shock	
	Number of nominal shocks	

1.2.2 Transport and storage conditions

Components in original packaging

The following specifications apply to components in transport packaging:

Table 1-20 Climatic conditions for storage and transport

Temperature range	See technical data of the relevant component	
Relative air humidity	Annual average	10 ... 75 %
	Up to 30 days annually	≤ 95 %
Temperature change	Within one hour	< 18 K
Atmospheric pressure	The specified values apply to a transportation altitude of up to 3000 m above sea level	70 to 106 kPa

Shipping backup batteries

Backup batteries may only be shipped in the original packaging. No special authorization is required to ship backup batteries. The lithium content is approximately 300 mg.

Note: The backup battery is classified as a hazardous substance, Class 9 in accordance with the relevant air-freight transportation regulations.

Applicable standards: DIN EN 60086

⚠ WARNING
Incorrect handling of backup batteries can lead to a risk of ignition, explosion and combustion.

Rules for handling backup batteries

The following regulations according to DIN EN 60086 must be adhered to:

Backup batteries

- May not be charged
- may not be heated or thrown into fires
- may not be pierced or crushed
- must not be tampered with mechanically or electrically in any way!

Rules for handling hard disks

The PCU hard disk unit is provided with shock absorbers. However,

the following rules must be observed when handling this unit.

Hard disk unit

- should always be transported in its original packaging
- should not be thrown or dropped
- should not be dismantled from the mechanical components with which it was supplied
- should not be handled by its springs

1.2.3 Operating conditions

Climatic environmental conditions

If the specified values cannot be maintained, a heat exchanger or an air conditioning unit must be provided.

Table 1-21 Climatic ambient conditions

Temperature range	See technical data of the relevant component	
Permissible change in relative humidity EN 60721-3-3, Class 3K5	Within one minute	max. 0.1 %
Condensation, spraying water and icing	Not permissible	
Temperature change	Within one hour	Max. 10 K
Atmospheric pressure	When operated at an altitude of 2000 m above sea level. For higher altitudes, the upper limit temperature must be reduced by 3.5 °C/500 m	82 kPa to 106 kPa

Function-impairing gases

Degree of severity 3C2 according to EN60721-3-3

Function-impairing dust

When working in areas where there is an unacceptably high dust hazard, the control must be operated in a cabinet with a heat exchanger or in a cabinet with a suitable air intake.

Maximum permissible dust contents in the air circulating in the cabinet:

- Proportion in suspension 0.2 mg/m^3
- Precipitation 1.5 mg/m^2/h

Note

The dust precipitation must be removed at appropriate time intervals.

1.3 MPI/OPI networking rules

Use

The following devices can be interconnected across the MPI bus:

- NCU/CCU
- PCU
- HT 6
- HHU
- MSTT/MCP

The MPI interconnecting cables are available in different lengths.

Network installation

Please take the following basic rules into account when undertaking network installations:

1. The MPI connection can be routed from one user to the next by plugging the MPI connector of the outgoing cable onto the MPI connector of the incoming cable.
2. The bus line must be terminated at both ends. Activate the terminating resistor in the MPI connector of the first and last node and deactivate the other terminal resistors (see figure below).
   Note:
   - Only two inserted terminators are permitted.
   - For HHU/HT6, bus terminating resistors are fitted permanently in the unit.
3. It is necessary to apply 5 V voltage to at least 1 terminator. For this, the MPI connector with inserted terminating resistor must be connected to a powered device.

NOTICE
The NC control must be located at the end of the connection.

4. Branch lines (supply cable from bus segment to user) should be as short as possible.
   Note:
   - Unused branch lines should be removed.
5. Each MPI node must first be connected and then enabled. When disconnecting an MPI node, first deactivate the connection, then remove the connector.
6. A maximum of two HHU and HT6 components can be connected per bus segment. It is also possible to connect two identical components, provided they have different node addresses.
   For info on setting the addresses (see also section on the corresponding component):
   - HHU: Via DIP switch or display (see Section: "Handheld Unit"),
   - For HT 6 by adapting the address before commissioning (see Section: “Handheld Terminal HT 6”).
     No bus connections may be made to the distributor boxes of an HHU or HT 6 (see note on point 2.)
     If necessary, more than one HHU/HT 6 can be connected to a bus segment with an intermediate repeater.

7. The following cable lengths for MPI or OPI for standard use without repeater may not be exceeded:

MPI (187.5 kbaud):	Max. cable length 1000 m in total
OPI (1.5 MBaud):	Max. cable length 200 m in total

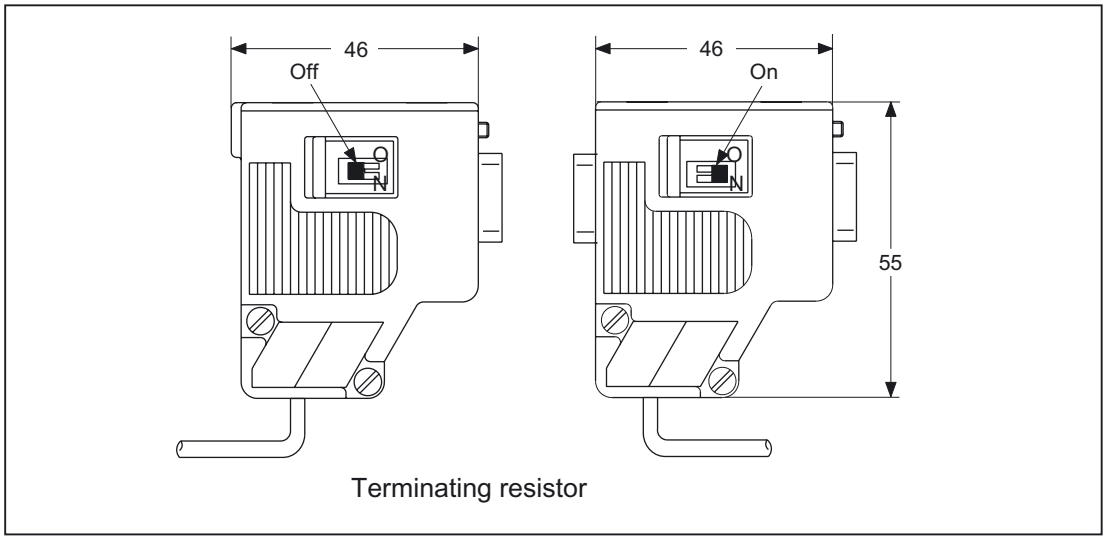

Figure 1-4 MPI connector

References: Catalog IK PI - industrial communication for automation and drives

Operator panel front: OP 08T

2

2.1 Description

The extremely compact SINUMERIK OP 08T operator panel front enables a distributed configuration of the operator panel front and controller.

The OP 08T operator panel front has a membrane keyboard with 79 keys (layout similar to SINUMERIK CNC editing keyboard KB 310C) as well as 2x8 horizontal and 2x8 vertical soft keys.
The distance to the operator panel fronts is determined by the maximum distance of two network nodes / access points.

The operator panel front OP 08T is connected to the PCU / NCU via the Ethernet as thin client in its own subnet (via DHCP server to PCU / NCU).
The mixed operation with an operator panel front is possible directly at the PCU.

The operator panel front is secured from the rear using special clamps supplied with the panel.

Validity

The description below applies to the OP 08T operator panel front
Order number: 6FC5203-0AF04-1BA0.

Features

- Ethernet 10/100 Mbit/s
- 2x USB 1.1 for connecting the mouse, keyboard and USB flash drive (1x front / 1x rear)
- 7.5" TFT flat screen with VGA resolution 640x480 pixels
- Membrane keyboard with alphabetic, numeric, cursor and control keypad
- Softkeys / direct keys
  - 2 x 8 horizontal rows of keys with softkey function
  - 2x8 vertical rows of keys with softkey and direct control key function *)
- Shift key for switchover to the second key level (not for switching over the letters, since they are uppercase only)
- Slight mounting depth
- Panel cutout (W x H): 285 x 304 mm
- IP65 protection
- Attachment: tension jacks at the rear

*) Direct control key function in case of SINUMERIK 840D sl /840Di sl

The SINUMERIK OP 08T operator panel front can be used for:

- SINUMERIK 810D/840D
  - SINUMERIK PCU 50.3
- SINUMERIK 840D sl
  - NCU 7xx
  - SINUMERIK PCU 50.3
- SINUMERIK 840Di sl

2.2 Operator controls and display elements

2.2.1 View

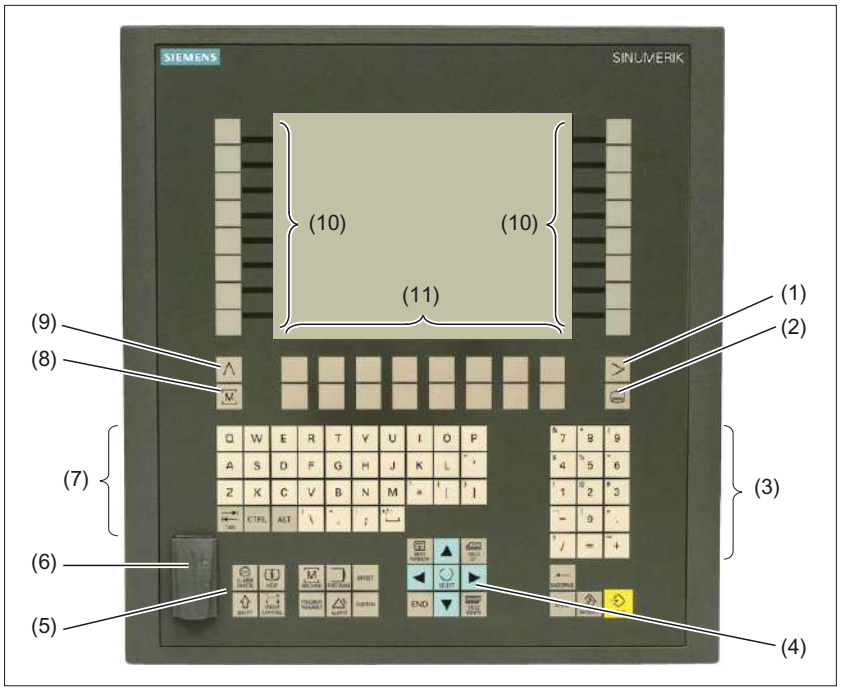

Figure 2-1 View of OP 08T operator panel front

(1) Etc. key
(2) Area switchover
(3) Numeric key group
(4) Cursor key group
(5) Control key group
(6) Interface USB 1.1
(7) Alphabetic key group
(8) Machine area
(9) Recall
(10) Softkeys and direct keys (vertical slide-in labels)
(11) Softkeys

2.2.2 Keyboard and display

Keyboard

Several keys and key pads are installed on the operator panel front:

- The alphabetic key group contains the letters A - Z and the space character for entering text.
- The numeric key group contains the digits 0 - 9, the - character and the decimal point for entering numeric characters and operators.
- The cursor key group is used to navigate on the screen.
- The control key group includes special functions.
- The area switchover shows the main menu.
- The ETC key allows for an expansion of the horizontal softkey bar in the same menu.
- The softkeys call up functions that are available on screen via a menu bar.
- The machine area key switches directly into the "Machine" operating area.
- The recall key jumps back to the superordinate menu. One window is closed.

The key symbols used on the operator panel front appear below along with the corresponding function keys on the PC keyboard.

Key	Function corresponds to PC key function	Key	Function corresponds to PC key function
ALARM CANCEL	Esc	END	End
1...n CHANNEL	F11	BACKSPACE	Backspace
HELP	F12	TAB	Tab
␣	Space	SHIFT	(only intended for internal keyboard changeover)
NEXT WINDOW	Home	CTRL	Ctrl key
PAGE UP	Page up	ALT	Alt key
PAGE DOWN	Page down	DEL	Delete
▲	Cursor up	INSERT	Insert
◀	Cursor left	INPUT	Enter
▶	Cursor right	∧	F9
▼	Cursor down	MENU SELECT	F10

Key	Function corresponds to PC key function	Key	Function corresponds to PC key function
SELECT	5 (in numeric key group)	A, ..., Z	<Shift> A, ..., Z
>	<Shift> F9	M MACHINE	<Shift> F10

Display

Note

Pixel error acc. to DIN EN ISO 13406-2 Class II.

2.2.3 Screen brightness control

The screen darkening control of the OP 08T has two functions:

- Enhancing the life span of the backlight by reducing the brightness
- Protecting the TFT display against the so-called "burn-in effect", which arises when a picture with a high contrast is displayed on the screen for one hour without any change.

The screen brightness control is designed in three stages.

Stage 1:
The brightness of the backlight is reduced / dimmed.

Note

Select the shortest possible response time for this stage.

Stage 2:
The backlight remains dim.
A black screen (screen brightness control) is shown on the screen.

Note

Activate the screen brightness control, in order to protect the TFT display against the so-called "burn-in effect".

Stage 3:
The backlight is switched off.
A black screen (screensaver display) is shown on the screen.

Note

Set the response time for this stage in such a way that the backlight remains off for at least 15 minutes.

Futher information under:

/IM2/: Commissioning HMI Embedded
/IM4/: Commissioning HMI Advanced

2.3 Interfaces

Front

- USB 1.1 to connect an external keyboard, mouse and USB FlashDrive (see section: "Control and display elements" → "View")

Note

Note that the electromagnetic compatibility of commercially available peripheral devices operated via the USB interface is usually rated for office use only.

For industrial use, components with a higher degree of certification are recommended.

Rear face

- Ethernet
- USB 1.1
- Power Supply

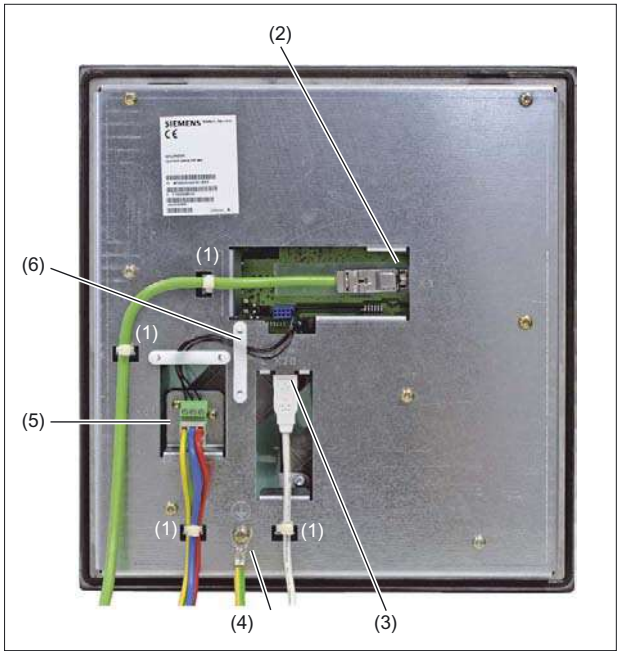

Figure 2-2 Rear view of OP 08T operator panel front

	Description		I/O	Type
(1)	Strain relief for the connecting cable			
(2)	Ethernet interface	X3	A	8-pole RJ45 socket
(3)	Interface USB 1.1	X20	A	USB-A
(4)	Earthing connection			M5 screw
(5)	Power supply 24 VDC	X81	I	3-pin terminal block
(6)	Cable clamp			

2.4 Installation

The OP 08T operator panel front is fixed in a rectangular section with clamps. For this reason, bore holes or screw holes are not needed. The tightening torque of the clamp set screws must not exceed 0.5 Nm.

Table 2-1 Dimensions of the mounting opening OP 08T

Width (mm)	Height (mm)	Depth (mm)
285	304	41 *)
*) Plus 10 mm cable connector and ventilation clearance		

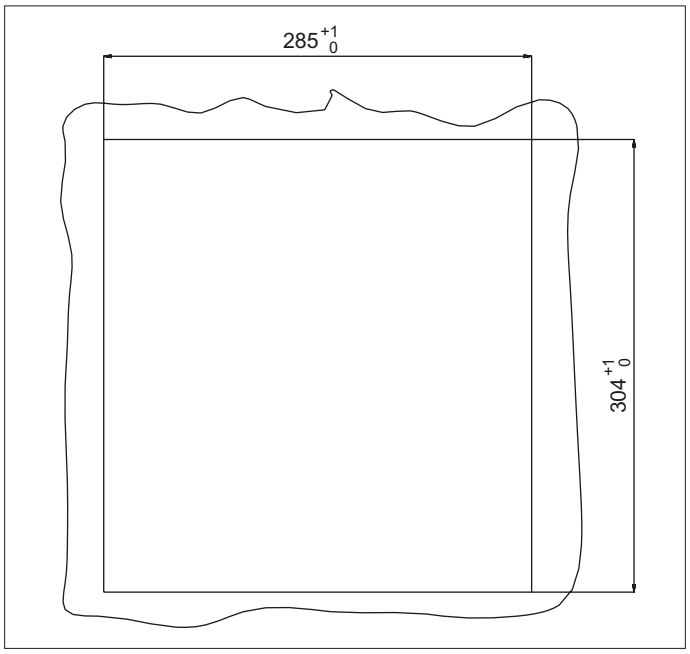

Figure 2-3 Panel cutout OP 08T

Dimension drawings

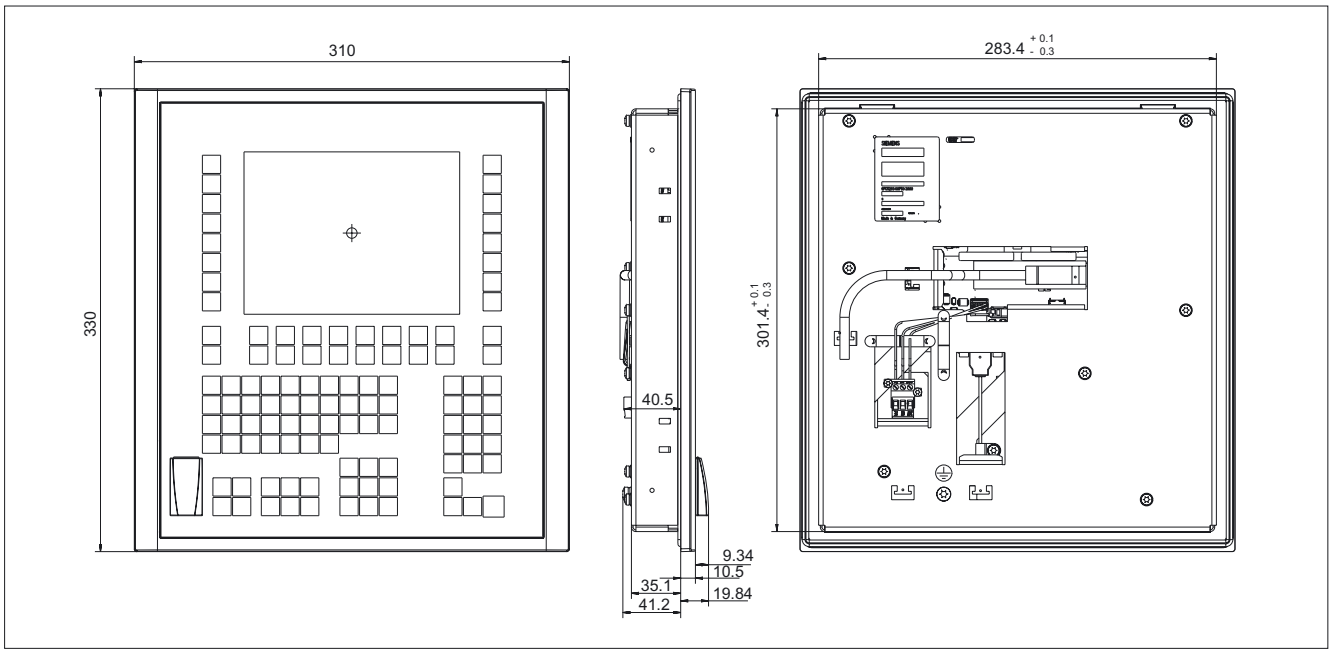

Figure 2-4 Dimension drawing OP 08T

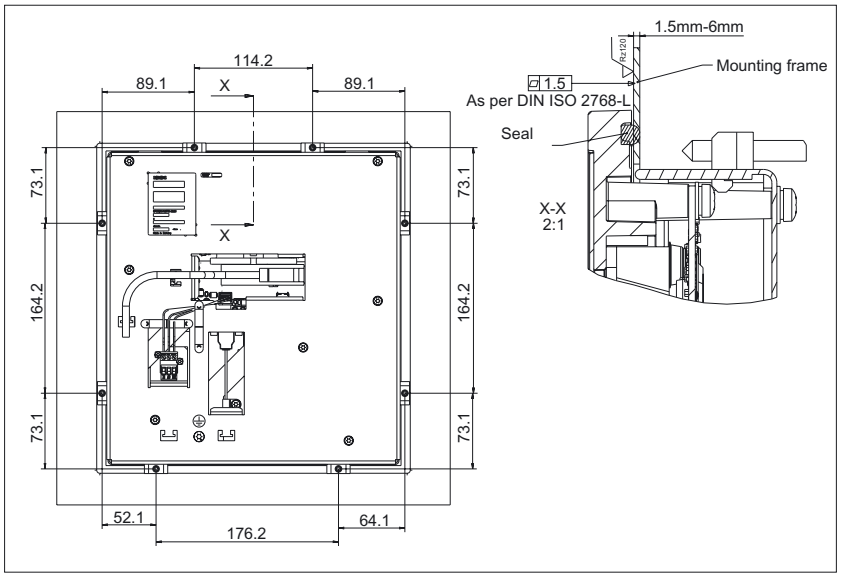

Figure 2-5 Dimensions of OP 08T clamps

2.5 Technical data

Safety			
Degree of protection as per EN 60529	Front side IP65	Rear side IP10	
Electrical data			
Power supply	24 VDC		
Power consumption	maximum approx. 15 W		
Mechanical data			
Dimensions (mm)	Width: 310	Height: 330	Depth: 41
Panel cutout (mm)	Width: 285	Height: 304	Depth: 51 *)
Weight	approx. 2.9 kg (without tension jack)		
Tightening torques, max.	Tension jacks: 0.4 - 0.5 Nm		
Mechanical ambient conditions (with PCU)	**Operation**	**Transport** (in transport packaging)	
Vibratory load as per EN 60068-2-6	10 – 58 Hz: 0.075 mm 58 – 200 Hz: 1g	5 – 9 Hz: 6.2 mm 9 – 200 Hz: 2g	
Shock load as per EN 60068-2-27	Acceleration: 5g shock duration: 30ms, load: 3x either direction (18x)	Acceleration: 30g shock duration: 6ms, load: 3x either direction (18x)	
Climatic ambient conditions			
Heat dissipation	By natural convection		
Condensation, spraying water and icing	Not permissible		
Supply air	Without caustic gases, dusts and oils		
	Operation	**Storage/shipping** (in transport packaging)	
Climate class	3K5	1K3 / 2K4	
Temperature limits	0 ... 45 ºC (at front) 0 ... 55 ºC (at rear)	-20 ... 60 ºC	
Limit values for rel. humidity to DIN IEC 68-2-3, DIN IEC 68-2-30, DIN 68-2-56	5 ... 80% at 25°C	5 ... 95% at 25°C	
	Temperature change max. 10 K/h. Non-condensing		
Display			
Size / resolution	7.5" TFT / 640x480 pixel (VGA)		

*) due to cable connector and ventilation clearance

2.6 Spare parts

The following components are available as spare parts for the OP 08T operator panel front:

Spare parts	Order No.:	Remarks
Tension jack (for supplementary components with 2.5 mm profile strength, length: 20 mm)	6FC5248-0AF14-0AA0	Set of 9
Sealing caps for USB connection	6FC5248-0AF05-0BA0	Set of 5

2.7 Accessories

2.7.1 Overview

The following accessories are available for the OP 08T operator panel front:

Component	Description	Amount	Order no.:
Slide-in labels	Slide-in labels (3 films DIN A4)	1	6FC5248-0AF04-1BA0.

2.7.2 Membrane keyboard: Labeling the slide-in labels

The OP 08T operator panel front is delivered ex-factory with two vertical slide-in labels (unprinted / background color: grayed-out).



Figure 2-6 Position of the vertical OP 08T slide-in labels

(1) Part 1
(2) Part 2

Upon request, a spare part packet with three blank films can be ordered, in order to print the slide-in labels with the key symbols (see section: "Spare parts" → "Overview").

Files for printing the blank film



Figure 2-7 Blank film OP 08T [printing direction (1)]

The DOConCD / Catalog NC 61 (CD enclosed) contains two files for printing the blank films:

- **Template_OP08T_13.doc**
- **Symbols_OP08T_13.doc**

The file **"Template_OP08T_13.doc"** is a template for the exact positioning of the symbols on the printable film.

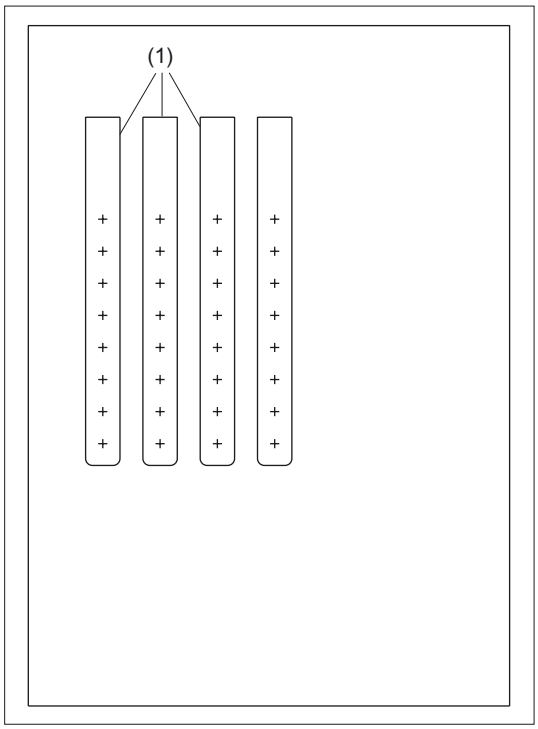

Figure 2-8 Template_OP08T_13.doc (blank template for film)

(1) Cutting edges

The file **"Symbols_OP08T_13.doc"** contains a broad range of key symbols.
An overview of these is given in the appendix.

Preparing slide-in labels

Inserting symbols

1. Open the files "Template_OP08T_13.doc" and "Symbols_OP08T_13.doc" in MS Word.
2. Select a key symbol from the file "Symbols_OP08T_13.doc" by left-clicking.
3. Copy the desired symbol to the clipboard via "Edit" → "Copy" or "Ctrl + C"
4. Return to the template file "Template_OP08T_13.doc"
5. Position the cursor before the insertion point in the desired table cell (in Fig.: "Template_OP08T_13.doc the insertion point is displayed by "+").
6. Insert the key symbol via "Edit" → "Paste" or "Ctrl + V".
7. Repeat steps two to six until you have inserted all the key symbols.

Inserting characters/text

1. Open the "Template_OP08T_13.doc" files in the MS Word text processing program.
2. Set the "Arial" font to format characters.
   (This font is comparable to the "Univers S57" font, used by Siemens for the key labeling.)
3. Position the cursor in the desired table cell and enter characters/text.

Printing the slide-in labels

1. Place the blank film in the printing direction in the slot of your laser printer
   (see Fig.: "Blankfolie OP 08T").
2. Select "film" as the printable medium if your printer allows this setting.
3. Start the printing process using MS Word.

Note

For labeling the labeling strips, HP Color Laser Jet film C2936A is used.
Make a test print on paper before you print on the film.
Allow the film to cool after printing so that the ink can dry.

4. Cut the slide-in labels out of the film along the edges (see Fig.:
   "Template_OP08T_13.doc").
5. Round off the corners of the labeling strips approx. 3 mm to facilitate insertion.

Dimension drawings

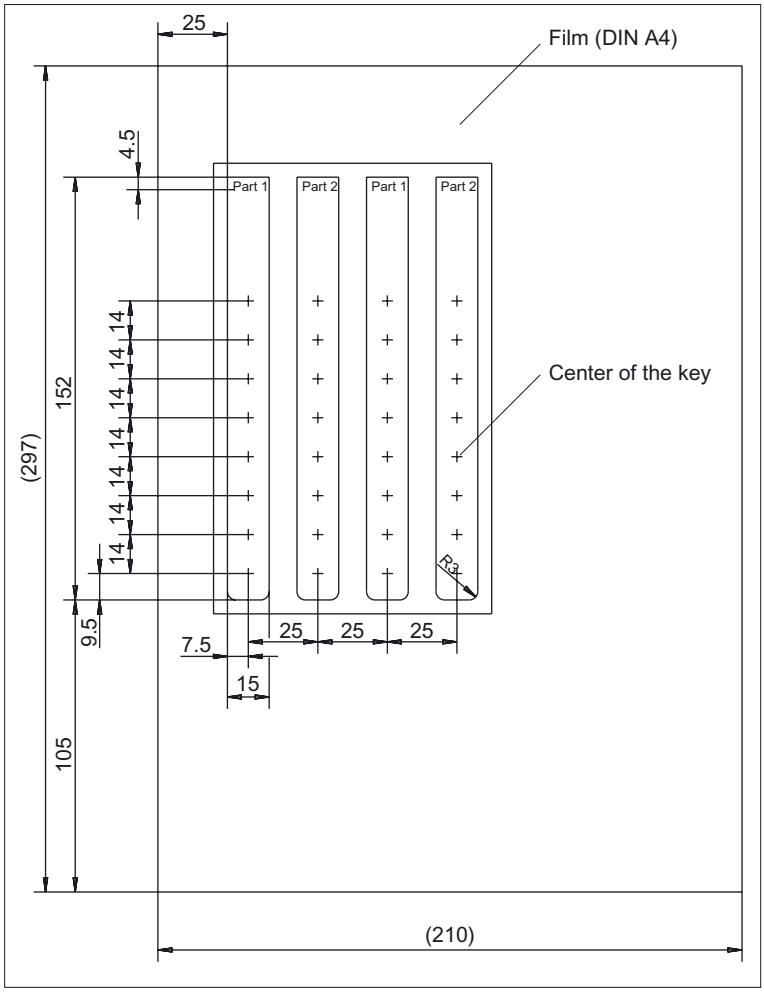

Figure 2-9 Dimensions for vertical slide-in labels

Creating your own symbols

- Drawing in a vector program (e.g. Designer, Freehand, CorelDraw):
  - Draw a 13 x 13 mm square, fill with the color white and give it an invisible border line.
  - Place the symbol in the center of this square.
  - Group the square and symbol together and add this group in the MS Word document Template_OP08T_13.doc.
- Drawing in an image editing program (e.g. Photoshop, Picture Publisher, Paint)
  - Draw a square 13x13 mm (37x37 pixel), filled with the color white.
  - Draw the symbol in the center of this square.
  - Copy the symbol and the square together and add the group in the MS Word document Template_OP08T_13.doc.

Operator panel front: OP 010

3

3.1 Description

The SINUMERIK OP 010 operator panel front has a 10.4" TFT color display with a resolution of 640 x 480 pixels (VGA) and features a 62-key membrane keypad (with 8 + 4 horizontal softkeys and 8 vertical softkeys) that has been optimized for programming parts programs.

Securing is done from the rear using special clamps that are included in the delivery kit.

Validity

The description below applies to the OP 010 operator panel front
(order number 6FC 5203–0AF00–0AA1)

Features

- 19" mounting format, 7 HU (height units)
- Panel cutout (W x H): 450 x 290 mm
- Slight mounting depth
- 10.4” flat screen (color) with VGA resolution 640 x 480 pixels using TFT technology
- Membrane keyboard with alphabetic, numeric, cursor, control and hotkey key groups
- Softkeys: 8 + 4 horizontal and 8 vertical softkeys
- Shift key for switchover to the second key level (not for switching over the letters, since they are uppercase only)
- Status LEDs for power supply and overtemperature
- Front USB interface
- IP65 degree of protection
- Attachment: tension jacks at the rear
- Can be combined with PCU, TCU, or Videolink receiver

3.2 Operator controls and indicators

3.2.1 View

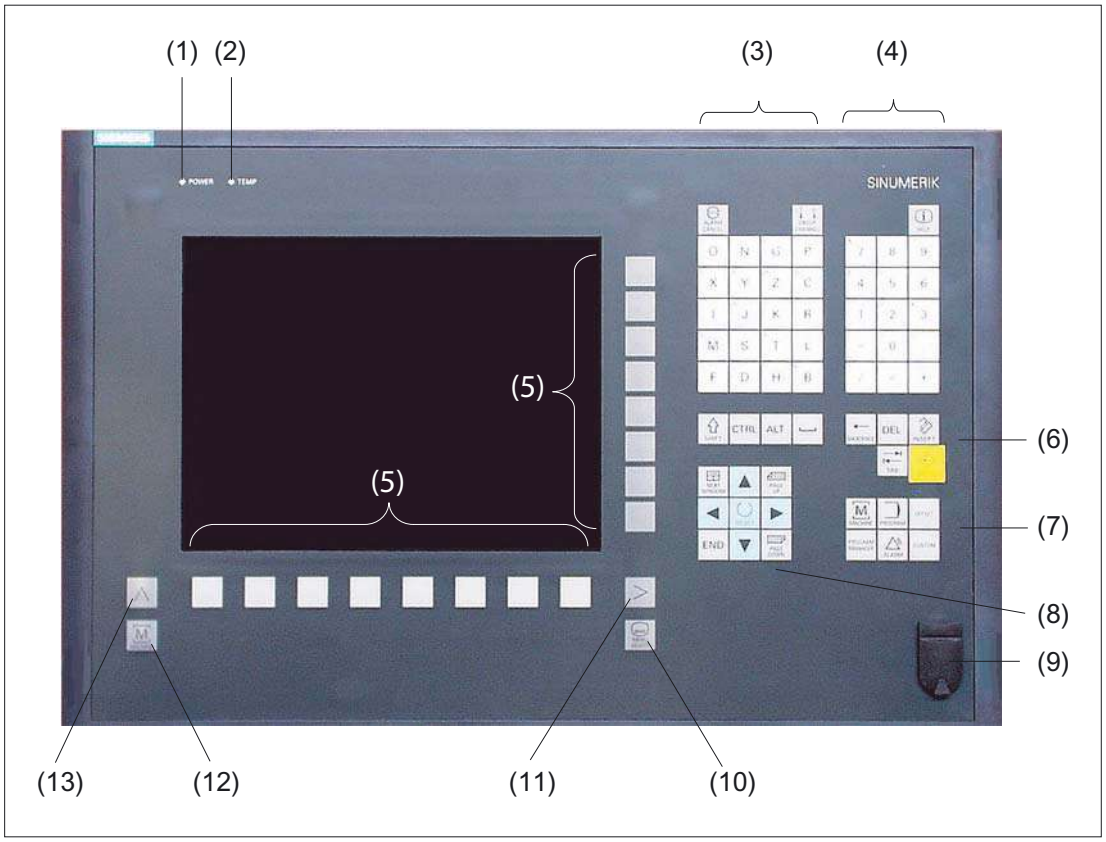

Figure 3-1 View of OP 010 operator panel front

(1) Status LED: POWER
(2) Status LED: TEMP
(illuminated LEDs indicate increased wear)
(3) Alpha key group
(4) Numerical key group
(5) Softkeys
(6) Control key group
(7) Hotkey group
(8) Cursor key group
(9) Front USB interface
(10) Area switchover
(11) etc. key
(12) Machine area
(13) Recall

3.2.2 Keyboard and display

Keyboard

Several keys and key pads are arranged on the OP 010 operator panel front:

- The alphabetic key group contains the letters A, ..., Z on two levels, arranged in accordance with programming requirements for entering text.
- The numeric key group contains the digits 0 ... 9, the -, /,=, + characters and the decimal point for entering numerical characters and operators.
- The control key group includes special functions.
- The hotkey group is used for the direct selection of operating areas.
- The cursor key group is used to navigate on the screen.
- The area switchover shows the main menu.
- The etc. key allows for an extension of the horizontal softkey bar in the same menu.
- The softkeys call up functions which are available on screen via a menu bar.
- The machine area key shifts directly into the "Machine" operating area.
- The recall key jumps back to the superordinate menu. One window is closed.

The key symbols used on the operator panel front appear below along with the corresponding function keys on the PC keyboard.

Key	Function corresponds to PC key function	Key	Function corresponds to PC key function
ALARM CANCEL	Esc	END	End
1...n CHANNEL	F11	BACKSPACE	Backspace
HELP	F12	TAB	Tab
␣	Space	SHIFT	(only intended for internal keyboard changeover)
NEXT WINDOW	Home	CTRL	Ctrl key
PAGE UP	Page up	ALT	Alt key
PAGE DOWN	Page down	DEL	Delete
▲	Cursor up	INSERT	Insert
◀	Cursor left	INPUT	Enter
▶	Cursor right	⋀	F9

Key	Function corresponds to PC key function	Key	Function corresponds to PC key function
▼	Cursor down	MENU SELECT	F10
SELECT	5 (in numeric key group)	A, ..., Z	<Shift> A, ..., Z
>	<Shift> F9	MACHINE	<Shift> F10
PROGRAM		PROGRAM MANAGER	
OFFSET		ALARM	
CUSTOM			

Display

Note

Pixel error acc. to DIN EN ISO 13406-2 Class II.

3.2.3 Screen saver

If a screen with high contrast is displayed unchanged for longer than 1 hour, the screensaver must be activated (screen switched dark) to protect the TFT display from "burn-in" of the last displayed screen.

For more information see:

/BEM/: HMI Embedded Operator's Guide

/IAM/: IM2 Installation and Start-up HMI Embedded; IM4 Installation and Start-up HMI Advanced

CAUTION
You may do irreversible damage to your TFT display if the screen saver is not activated.

3.3 Interfaces

This operator panel front has the following interfaces:

Front side

USB 1.1 to connect an external keyboard or mouse (see Fig:
"Front view of operator panel front" in section: "Control and display elements" --> "View")

Note

Note that the electromagnetic compatibility of commercially available peripheral devices operated via the USB port is usually rated for office use only.

For industrial use, components with a higher degree of certification are recommended.

Rear side

- Two ribbon cables for connecting the PCU (see figure below):
  - I/O USB cable K1 (ribbon cable):
    All signals that are used for the display interface and the connection of operator panel fronts
    (e.g. supply voltages)
  - Display cable K2
- Direct control key interface X11 (under cover plate)
- Interface X12 - reserved (under cover plate)

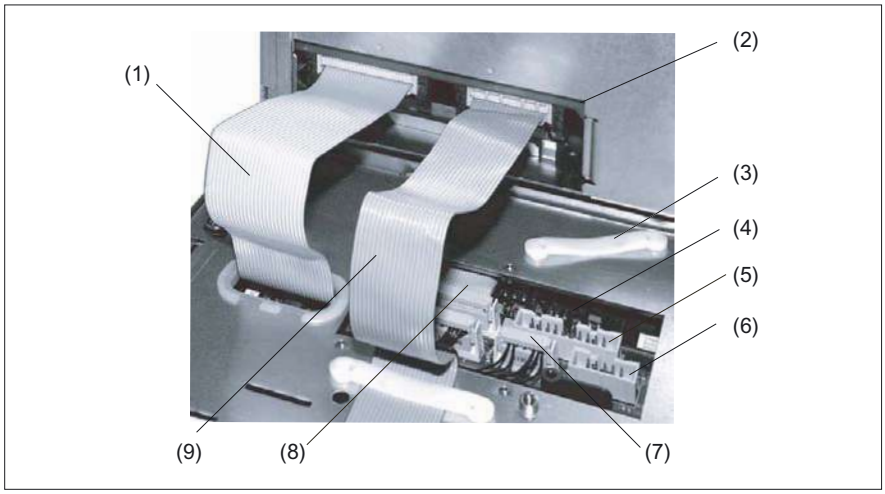

Figure 3-2 Connections on rear side of housing: Connections to PCU

(1) I/O USB cable K1
(2) PCU main board
(3) Cable clamp for connecting up direct key module
(4) Keyboard controller
(5) Direct control key interface X11
(6) Interface X12 (reserved)
(7) Connection X14 for backlight
(8) Connection X1 for I/O USB cable K1
(9) Display cable K2

Pin assignment

More details in Chapter: "Connection Conditions", section: "Secondary electrical conditions".

3.4 Mounting

3.4.1 Preparation for mounting

Table 3-1 Dimensions of the mounting hole (see diagram below)

Used PCU type	Width (mm)	Height (mm)	Depth + clearance (mm) measured from the mounting wall surface
PCU 20	450	290	76 + 10
PCU 50			108.2 + 10
PCU 70			149.2 + 10

Thanks to the tension jacks on the OP 010, drill-holes or screw holes are not needed.

This retaining method also affords a degree of protection IP65 (but only in conjunction with a circumferential seal and when the protective USB cap is fitted).

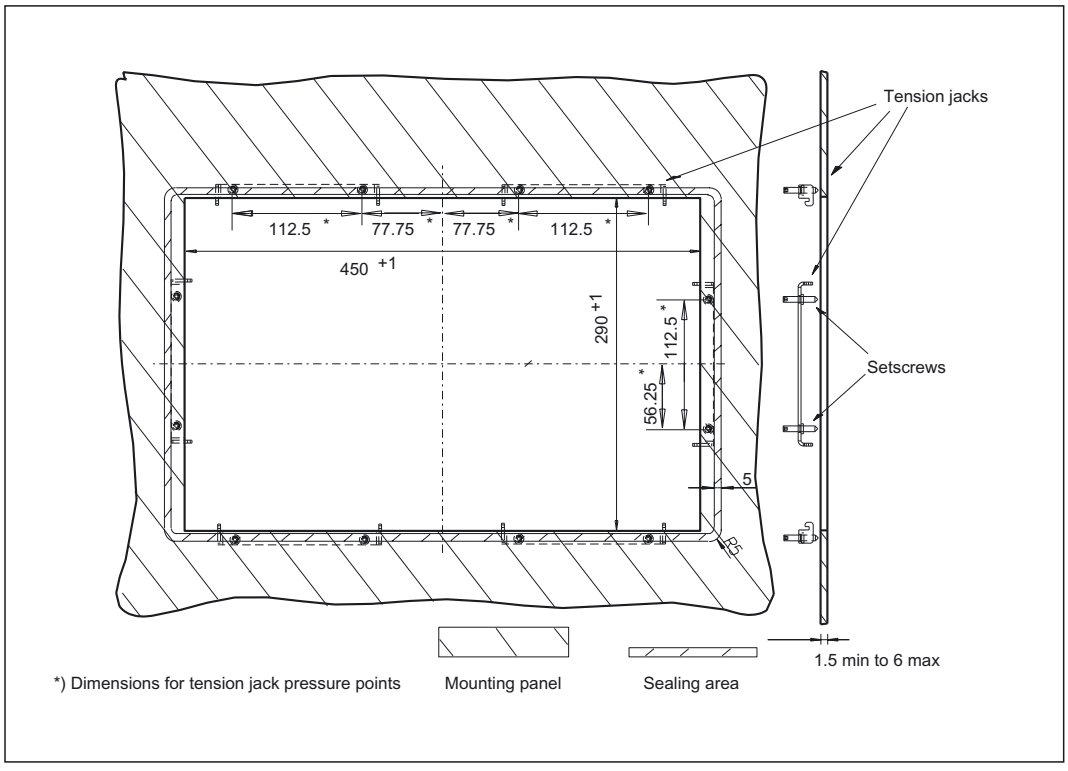

Figure 3-3 Dimension sheet for installing the OP 010 operator panel front

3.4.2 Assembling an OP 010 and a PCU

When combining an OP 010 and PCU and/or video link receiver, it is advisable to assemble them prior to installing them in the assembly panel.

Procedure

To do this, proceed as described in section: “OP 012”, section: "Assembling the OP 012 and PCU".

Then undo the shipping lock for the hard-drive, otherwise the system will not boot.

3.4.3 Mounting on the mounting wall

The clearance at the rear of the PCU must be at least 10 mm to ensure sufficient ventilation (see Figure: "Attaching the PCU to the OP 012 operator panel front", section “OP 012,” section: "Assembling the OP 012 and PCU").

For more detailed information, please refer to the relevant PCU sections and section: "Heat dissipation".

NOTICE
Permitted mounting position: deviating by up to 5º from the vertical. This value can be further restricted by attached components (PCU, video link receiver, ...).

Procedure

1. Insert the assembled components (operator panel front and PCU) from the front into the panel cutout (see Figure:. "Dimension sheet for installing the operator panel front", section: "Preparation for mounting").
2. Secure the operator panel front in the panel cutout from the rear using the tension jacks by tightening the setscrews (torque 0.4 - 0.5 Nm).

3.4.4 Softkey labeling

User-specific functions can be assigned to the horizontal and vertical softkey bars. Printed labeling strips can be used to label the softkeys.

Blank labels are already installed on delivery.

To make the labels, DIN-A4 film is available (Order No., see Section: "Spare parts").

Note

Use the "Arial" font to format text. This font is comparable to the "Univers S57" font, used by Siemens for the key labeling.

Proceed as follows

1. Letter the mat side of the film using a laser printer.
2. Cut the printed labels along the preprinted lines.
3. Remove the PCU retaining screws and swing out the PCU away from the operator panel front.
4. Insert the strips into the slots provided on the rear side of the operator front panel.
5. Swing the PCU back to the operator panel and secure by tightening the screws.

If the operator panel front and PCU are dismantled, omit steps 3 and 5.

3.5 Technical specifications

Security			
Safety class	III; PELV acc. to EN 50178		
Degree of protection per EN 60529	Front side IP65	Rear side IP 00	
Approvals	CE / cULus		
Electrical specifications			
Power supply (via I/O USB cable and display cable)	Display	Backlight inverter	Logic / USB (with / without load)
Voltage Current (typ./max. mA; approx.)	5 V +/- 5% 280 / 380	12 V +/- 10% 750 / 1000	5.2 V +/- 2% 350 / 1000
Power consumption	Typical, approx. 10 W	Maximum approx. 16 W	
Mechanical data			
Dimensions	Width: 483 mm Height: 310 mm Depth: 30 mm	Mounting depth: 20 mm incl. PCU 20: 76 mm *) incl. PCU 50: 108.2 mm *) incl. PCU 70: 149.2 mm *)	
Weight	Approx. 5 kg		
Tightening torques, max.	Tension jack screws: 0.5 Nm	M3 screws: 0.8 Nm	M4 screws: 1.8 Nm
Mechanical ambient conditions (with PCU)	**Operation**	**Transport** (in transport packaging)	
Vibratory load	10 -58 Hz: 0.075 mm 58 – 200 Hz: 9.8 m/s^2 3M4 per EN 60721-3-3	5 -9 Hz: 3.5 mm 9 – 200 Hz: 9.8 m/s^2 2M2 per EN 60721-3-2	
Shock stressing	50 m/s^2, 30 ms, 18 shocks 3M2 per EN 60721-3-3	300 m/s^2, 6 ms, 18 shocks 2M2 to EN 60721-3-2	
Climatic ambient conditions			
Cooling	By natural convection		
Condensation, spraying water and icing	Not permitted		
Supply air	Without caustic gases, dusts and oils		
	Operation	**Storage/shipping** (in transport packaging)	
Applicable standards	EN 60721-3-3	EN 60721-3-1 / -3-2	
Climate class	3K5	1K3 / 2K4	
Temperature limits	0 ... 45 ºC (at front) 0 ... 55 ºC (at rear)	-20 ... 60ºC	
Temperature change	Max. 10 K/h	Max. 18 K/h	
Limits for relative humidity	5 ... 80% at 25°C (+77°F)	5 ... 95% at 25°C	
Permissible change in the relative air humidity	max. 0.1% /min		

Display	
Size / resolution	10.4" / 640 x 480 pixels
MTBF backlight	typ. 50 000 h at 25 ºC (dependent on the temperature)

*) Plus 10 mm clearance

3.6 Replacement parts

3.6.1 Overview

The following diagram shows the OP 010 operator panel front dismantled into its individual parts.

The components provided with an order number are available as individual spare parts.

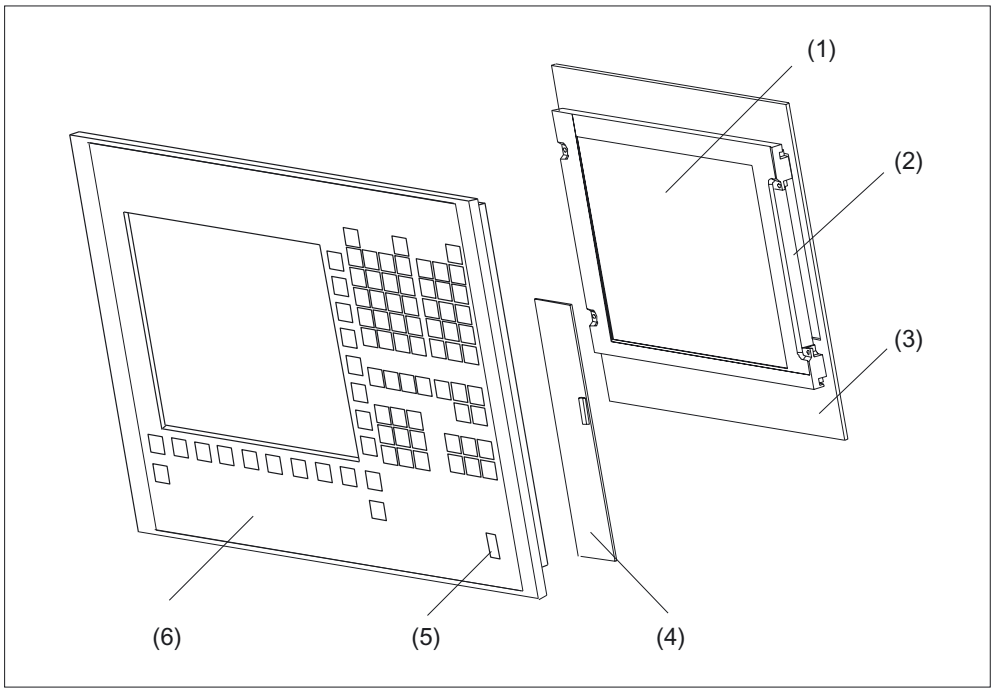

Figure 3-4 Individual parts for the OP 010 operator panel front

(1)	LCD unit		
(2)	Backlight with backlight inverter		
(3)	Display support		
(4)	Keyboard controller		
	Spare parts	**Order number**	**Remarks**
(5)	Cap for the USB port	6FC5248–0AF05–0AA0	Set of 10
(6)	Operator panel front without LCD unit	6FC5248–0AF00–0AA0	
	Tension jacks	6FC5248–0AF06–0AA0	Set of 6
	DIN A4 film	6FC5248–0AF07–0AA0	for slide-in labels for softkey labeling*) Set of 3

*) The dimensions for production of film slide-in labels for softkey labeling can be seen in the following diagram.

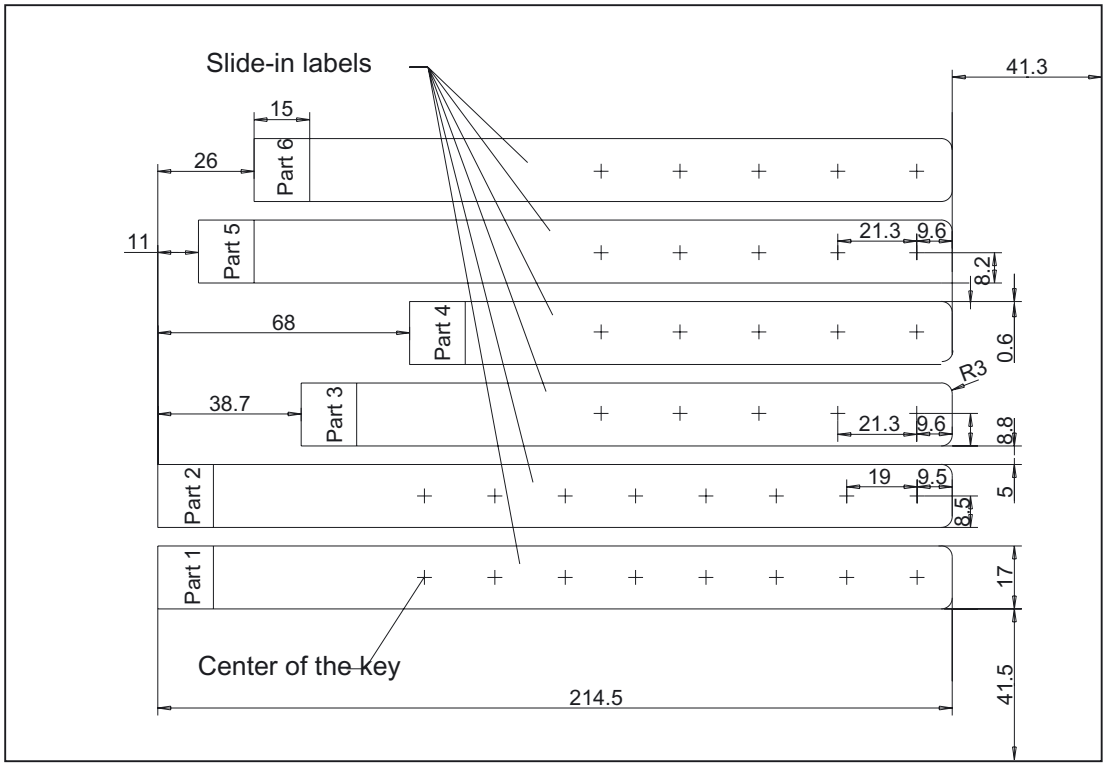

Figure 3-5 Dimensions for DIN A4 film

3.6.2 Replacement

CAUTION
Parts must only be replaced by trained personnel (danger of damage to sensitive components due to static electricity)!

USB cap / tension jack

The replacement of the USB sealing cap and tension jacks will not be described since it is simple and self-explanatory.

Film labels

The procedure for replacement is as described in section: “OP 012”, section: "Softkey labels."

Operator panel front

When replacing the operator panel front, the previous LCD unit and keyboard controller can be used again. They are therefore disassembled and re-assembled after the appropriate component has been replaced.

Note

We recommend that the keypad controller be re-used so that the control parameters that have been programmed-in are not lost.

Procedure

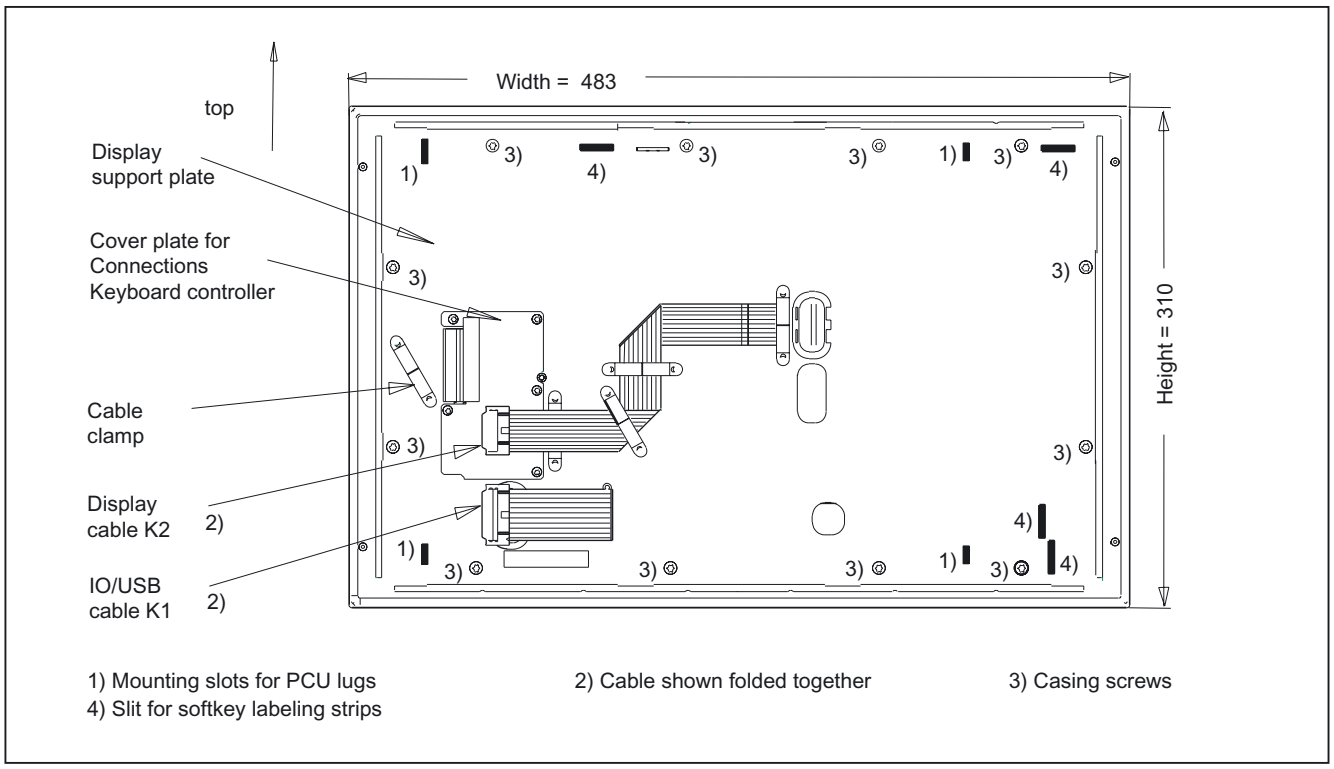

Figure 3-6 OP 010 rear side

1. Put the OP 010 face down on a flat, soft surface and loosen the 12 casing screws (see figure above).
2. Remove the softkey labeling strips and the cover plate.
3. Remove the following connectors from the keyboard controller (see following Fig.): Backlight (socket X14) and I/O USB cable K1.
4. Lift off the display support with the display.

   In addition to the keyboard controller, the rear sides of the mouse and USB interface become visible.
5. After bending back the two lugs, withdraw the USB interface.

6. Disconnect the three membrane connectors of the operator panel front keyboard from sockets X7, X8 and X10 (see note below for procedure).
7. Remove the retaining screws from the keyboard controller.
8. Lift USB interface and keyboard controller off the front plate. The interconnections may remain plugged.
9. Install the components into the new operator front panel in reverse order (procedure: see Note).

Note

Descriptions of how to disconnect and connect the membrane connector can be found in section: "Connection Conditions," section: "Handling membrane connectors."

When tightening the screws, observe the torques (refer to the Section: "Technical data").

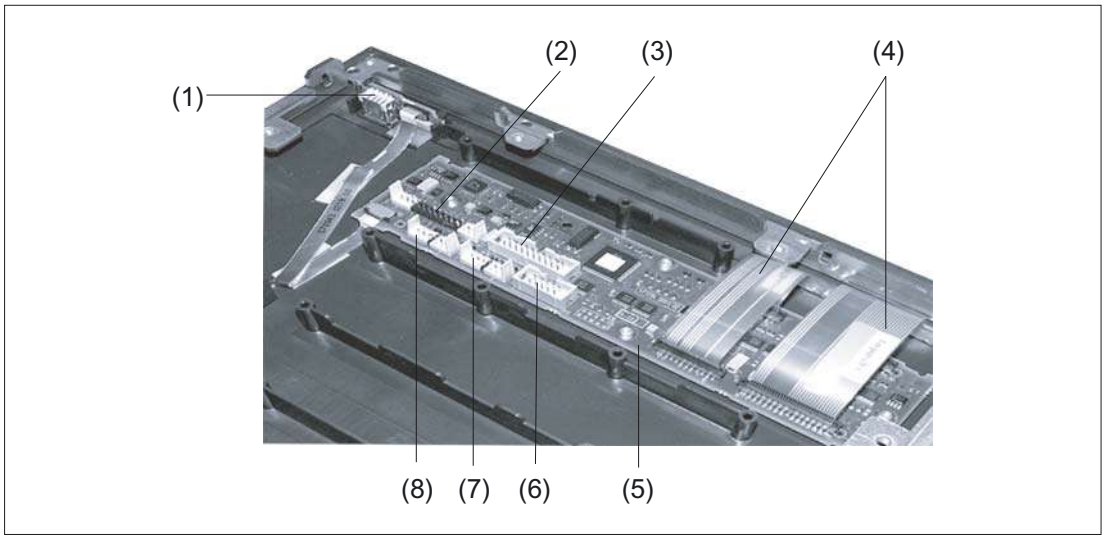

Figure 3-7 Changing the operator panel front

(1) USB port
(2) Connection X1 for I/O USB cable K1
(3) Direct control key connection X11
(4) Membrane connector for connecting the keyboard of the operator panel front
(5) Keyboard controller
(6) Connection X12 (reserved)
(7) Connection X14 for backlight
(8) Connection X4 for mouse

Operator panel front: OP 010S

4

4.1 Description

The slim SINUMERIK OP 010S operator panel front and 10.4" TFT color display with a resolution of 640 x 480 pixels (VGA) features 8 +4 hard horizontal softkeys and 8 vertical softkeys as mechanical keys.

You can use the OP 032S or KB 310C full CNC keyboard for entering data.

Securing is done from the rear using special clamps that are included in the delivery kit.

Validity

The description below applies to the OP 010S operator panel front
(order number 6FC5203–0AF04–0AA0)

Features

The operator panel front OP 010S (successor to OP 032S) described in the following is characterized by:

- Mounting dimensions 310 x 330 mm
- Panel cutout (W x H): 285 x 304 mm
- Slight mounting depth
- 10.4" TFT flat screen (color) with VGA resolution 640 x 480 pixels
- Mechanical keys:
  - 8 horizontal softkeys
  - 8 vertical softkeys
  - Four control keys
- Status LEDs for power supply and overtemperature
- Front USB interface
- Degree of protection: IP54
- Attachment: tension jacks at the rear
- Can be combined with the PCU, TCU or Videolink receiver and full CNC keyboard KB 310C or OP 032S

4.2 Operator controls and indicators

4.2.1 View

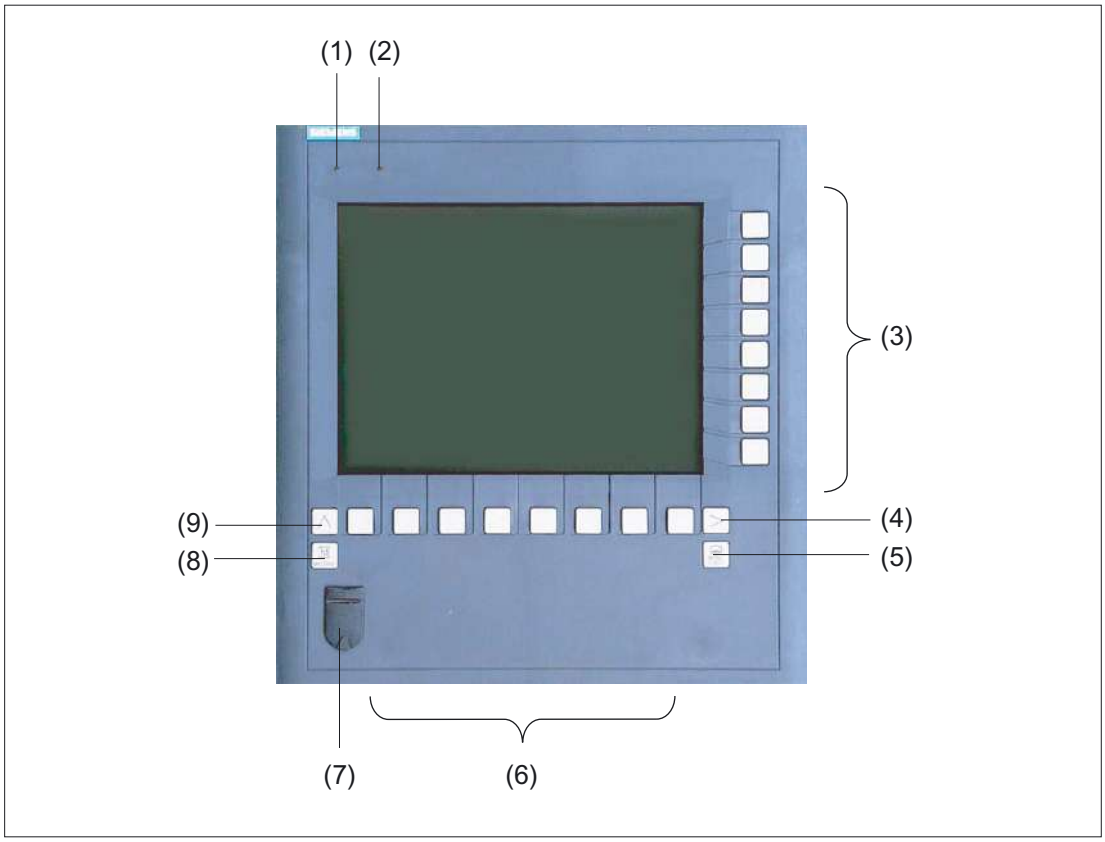

Figure 4-1 View of OP 010S operator panel front

(1) Status LED: POWER
(2) Status LED: TEMP
(illuminated LEDs indicate increased wear.)
(3) Softkeys
(4) Etc. key
(5) Area switchover
(6) Softkeys
(7) Front USB interface
(8) Machine area
(9) Recall

4.2.2 Keyboard and display

Keyboard

Several keys are arranged on the operator panel front:

- The eight vertical and horizontal softkeys call up functions that are available on screen via a menu bar.
- The etc. key allows for an expansion of the horizontal softkey bar in the same menu.
- The area switchover shows the main menu.
- The machine area key switches directly into the "Machine" operating area.
- The recall key jumps back to the superordinate menu. One window is closed.

The key symbols used on the operator panel front appear below along with the corresponding function keys on the PC keyboard.

Key	Function corresponds to PC key function	Key	Function corresponds to PC key function
>	<Shift> F9	∧	F9
M MACHINE	<Shift> F10	MENU SELECT	F10

Display

Note

Pixel error acc. to DIN EN ISO 13406-2 Class II.

4.2.3 Screen saver

If a screen with high contrast is displayed unchanged for longer than 1 hour, the screensaver must be activated (screen switched dark) to protect the TFT display from "burn-in" of the last displayed screen.

For more information see:

/BEM/: HMI Embedded Operator's Guide

/IAM/: IM2 Installation and Start-up HMI Embedded; IM4 Installation and Start-up HMI Advanced

CAUTION
You may do irreversible damage to your TFT display if the screen saver is not activated.

4.3 Interfaces

This operator panel front has the following interfaces:

Front side

USB 1.1 to connect an external keyboard or mouse (see Fig: "Front view of operator panel front" in section: "Control and display elements" --> "View")

Note

Note that the electromagnetic compatibility of commercially available peripheral devices operated via the USB port is usually rated for office use only.

For industrial use, components with a higher degree of certification are recommended.

Rear side

- Two ribbon cables for connecting the PCU (see figure below):
  - I/O–USB cable K1 (ribbon cable):
    All signals that are used for the display interface and the connection of operator panel fronts (e.g. supply voltages)
  - Display cable K2

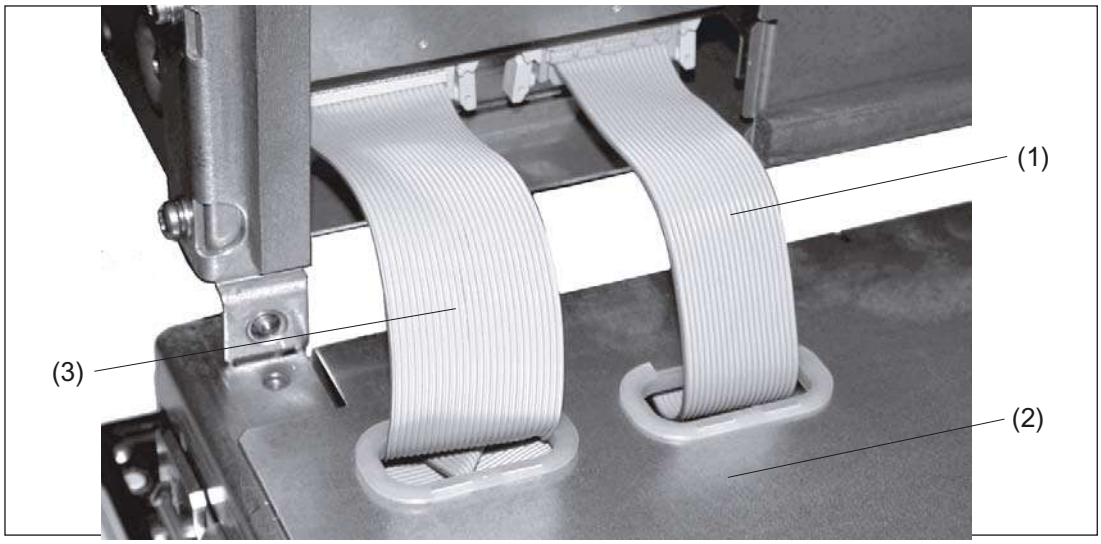

Figure 4-2 Connections on rear side of housing Connections to the PCU

(1) Display cable K2
(2) Back of operator panel
(3) I/O USB cable K1

Pin assignment

More details in section: "Connection Conditions," section: "Secondary electrical conditions."

4.4 Mounting

4.4.1 Preparation for mounting

Table 4-1 Dimensions of the mounting hole (see diagram below)

Used PCU type	Width (mm)	Height (mm)	Depth + clearance (mm) measured from the mounting wall surface
PCU 20	285	304	91 + 10
PCU 50			123.2 + 10
PCU 70			164.2 + 10

Thanks to the tension jacks on the OP 010S, drill-holes or screw holes are not needed.

This retaining method also affords a degree of protection IP65 (but only in conjunction with a circumferential seal and when the protective USB cap is fitted).

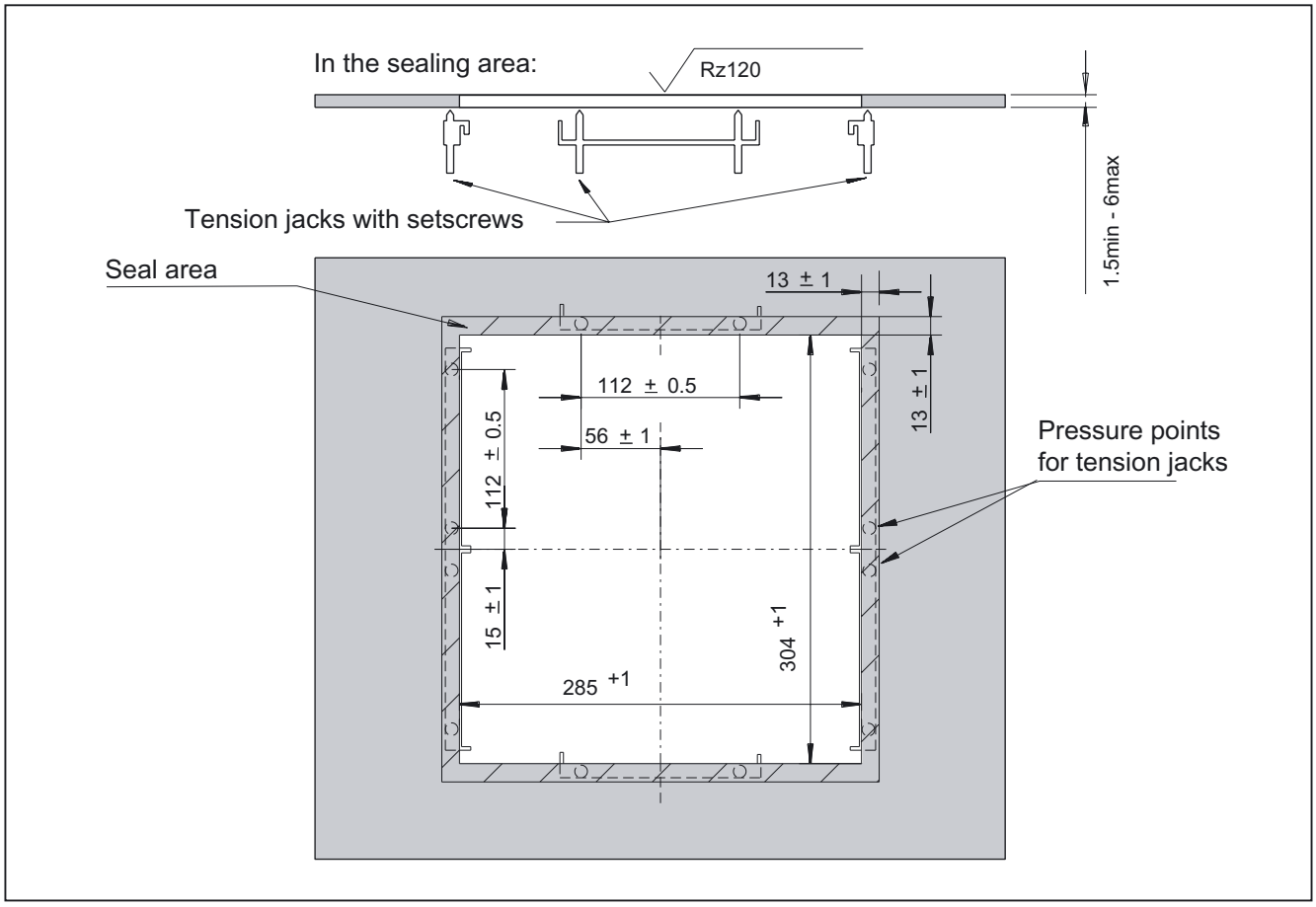

Figure 4-3 Dimension sheet for installing the OP 010S operator panel front

4.4.2 Mounting on the mounting wall

When you are using a combination of OP 010S and PCU, it is advisable to install the OP 010S in the assembly panel first and then mount the PCU on the OP 010S.

Procedure

1. Insert the OP 010S in the panel cutout from the front.
2. Use 6 tension jacks to secure it in the panel cutout from the rear (see figure: "Dimension sheet for installing the OP 010S operator panel front," section: "Preparation for mounting").
3. Tighten the setscrews (tightening torque 0.4 – 0.5 Nm).

4.4.3 Assembling an OP 010S and a PCU

Note

The PCU must correspond to the PCU 50 ≤ 500 MHz (see Section: "PCU 50", section: "View"), i.e. any existing mounting brackets must be removed.

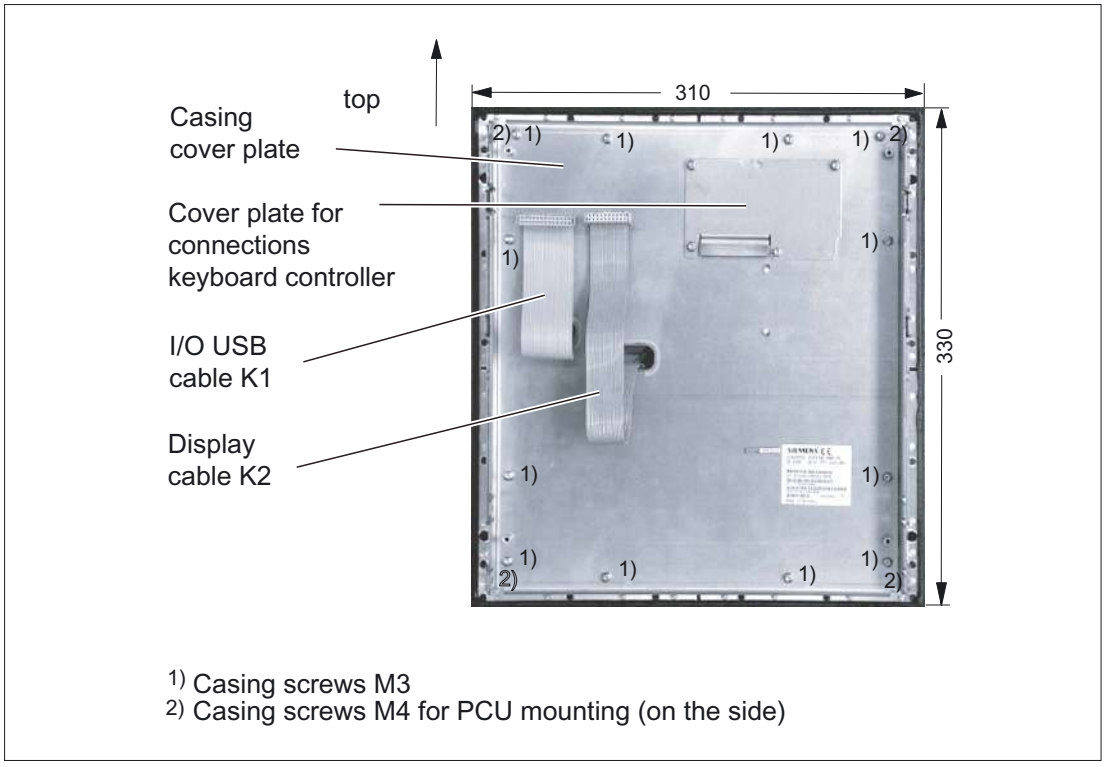

Figure 4-4 Rear side of operator panel front with arrangement of interfaces and mounting screws

Procedure

1. Position the PCU almost at right-angles to the OP (see figure in section: "Interfaces").
2. Insert cable connectors K1 and K2 of the OP into the corresponding counterpieces behind the opening in the PCU casing.
   Ensure that the connectors snap in and that the locks are closed.
3. Fold the PCU onto the OP.
4. Using the four M3 and four M4 screws supplied, attach the PCU to the side of the OP (tightening torques: M3 – 0.8 Nm; M4 – 1.8 Nm).

The clearance at the rear of the PCU must be at least 10 mm to ensure sufficient ventilation (see following Figure).

For more detailed information, please refer to the relevant PCU sections and section: "Heat dissipation."

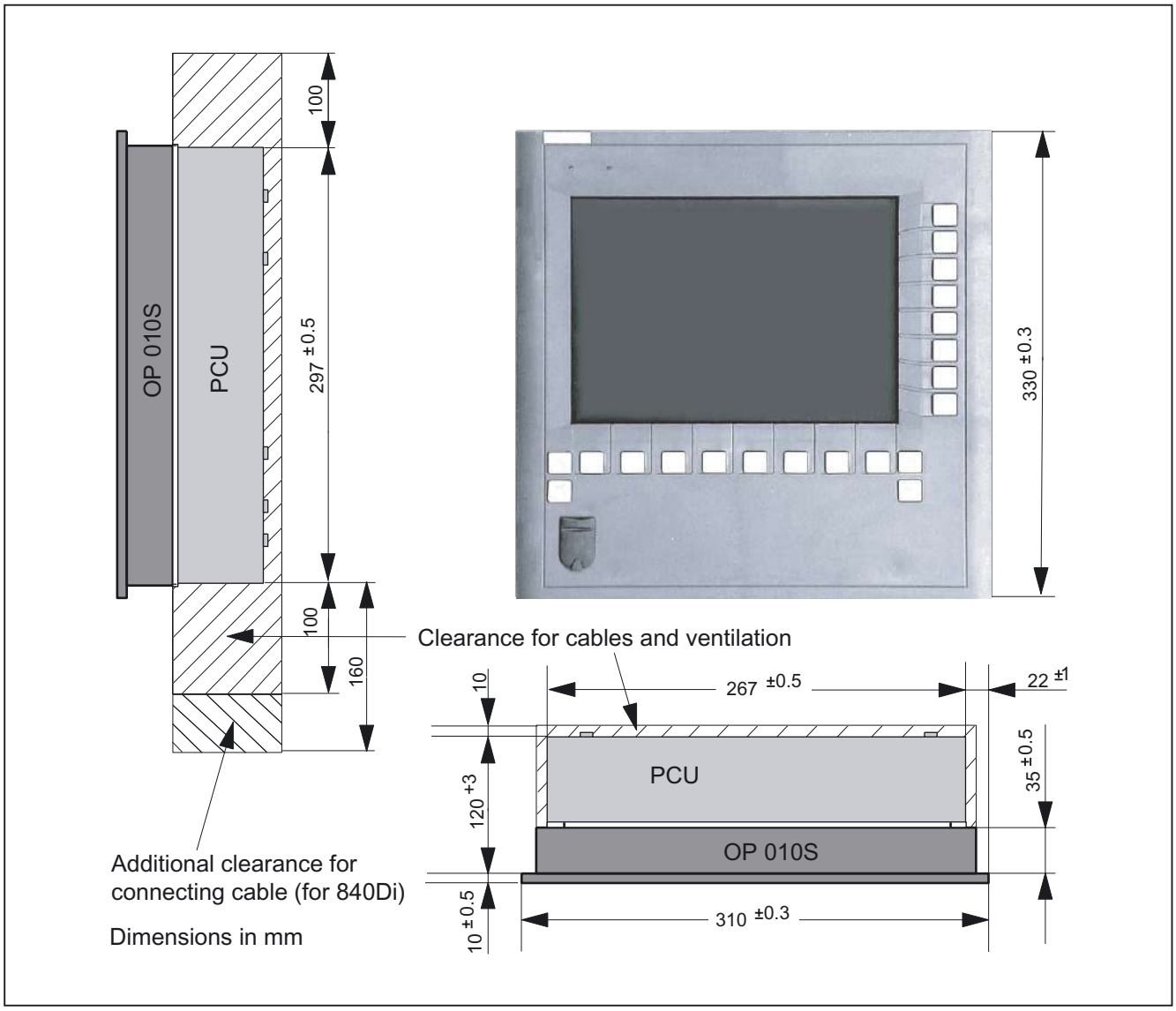

Figure 4-5 Mounting the PCU 50 to the OP 010S operator panel front with clearances

NOTICE
Permitted mounting position: deviating by up to 5º from the vertical. This value can be further restricted by insalled components (PCU, video link receiver, ...).

4.5 Technical specifications

Safety			
Safety class	III; PELV acc. to EN 50178		
Degree of protection per EN 60529	Front panel IP54	Rear side IP 00	
Approvals	CE / cULus		
Electrical data (without PCU)			
Power supply (via I/O USB cable and display cable)	Display	Backlight inverter	Logic / USB (with / without load)
Voltage Current (typ. / max. mA; approx.)	5 V +/- 5% 420 / 600	12 V +/- 10% 900 / 1050	5.2 V +/- 2% 350 / 1000
Power consumption	Typical, approx. 10 W	Maximum approx. 16 W	
Mechanical data			
Dimensions	Width: 310 mm Height: 330 mm Depth: 45 mm	Mounting depth: 35 mm incl. PCU 20: 91 mm *) incl. PCU 50: 123.2 mm *) incl. PCU 70: 164.2 mm *)	
Weight	Approx. 5.5 kg		
Tightening torques, max.	Tension jack screws: 0.5 Nm	M3 screws: 0.8 Nm	M4 screws: 1.8 Nm
Mechanical ambient conditions (with PCU)	**Operation**	**Transport** (in transport packaging)	
Vibratory load	10 -58 Hz: 0.075 mm 58 -200 Hz: 9.8 m/s^2 3M4 according to EN 60721-3-3	5 -9 Hz: 3.5 mm 9 -200 Hz: 9.8 m/s^2 2M2 according to EN 60721-3-2	
Shock stressing	50 m/s^2, 30ms, 18 shocks 3M2 according to EN 60721-3-3	300 m/s^2, 6ms 18 shocks 2M2 according to EN 60721-3-2	
Climatic ambient conditions			
Cooling	By natural convection		
Condensation, spraying water and icing	Not permitted		
Supply air	Without caustic gases, dusts and oils		
	Operation	**Storage/transport** (in transport packaging)	
Applicable standards	EN 60721-3-3	EN 60721-3-1 / -3-2	
Climate class	3K5	1K3 / 2K4	
Temperature limits	0 ... 45 ºC (at front) 0 ... 55 ºC (at rear)	-20 ... 60ºC	
Temperature change	Max. 10 K/h	Max. 18 K/h	
Limits for relative humidity	5 ... 80% at 25°C	5 ... 95% at 25°C	
Permissible change in the relative air humidity	max. 0.1% in 1 min		

Display	
Size / resolution	10.4 " TFT / 640 x 480 pixels
MTBF backlight	typ. 50 000 h at 25 ºC (dependent on the temperature)

*) Plus 10 mm clearance

4.6 Replacement parts

4.6.1 Overview

The diagram shows the OP 010S operator panel front dismantled into its individual parts.

The components provided with an order number are available as individual spare parts.

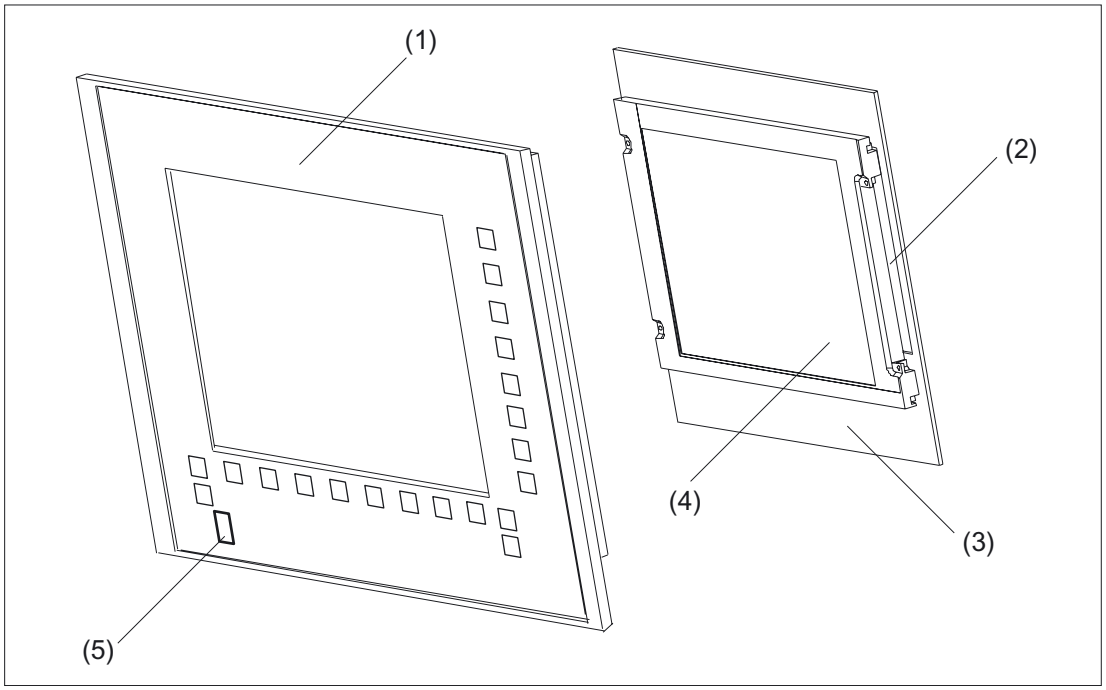

Figure 4-6 Individual parts for the OP 010S operator panel front

	Spare parts	Order number	Remarks
(1)	Operator panel front	6FC5203-0AF04-0AA0	Without LCD unit, without USB port, without keyboard controller
(2)	Backlight with backlight inverter		
(3)	Display holder with keyboard controller (rear side)		
(4)	LCD unit		
	Spare parts	**Order number**	**Remarks**
(5)	Cap for the USB port	6FC5248-0AF05-0AA0	Set of 10
	Tension jacks	6FC5248-0AF06-0AA0	Set of 6

4.6.2 Replacement

CAUTION
Parts must only be replaced by trained personnel (danger of damage to sensitive components due to static electricity)!

USB cap / tension jack

The replacement of the USB sealing cap and tension jacks will not be described since it is simple and self-explanatory.

Operator panel front

When changing the front plate, the existing USB interface and the display holder with display, backlight inverter and keyboard controller can be reused.

Procedure

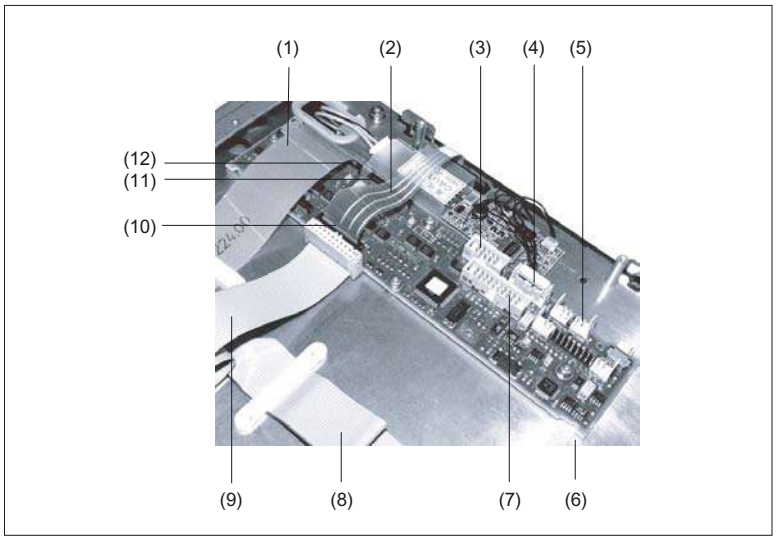

Figure 4-7 Keyboard controller

(1) Membrane line from the operator panel front keyboard
(2) Membrane line from the operator panel front keyboard
(3) Connection X12 (reserved)
(4) Connection X14 for display and backlight
(5) Connection X4 (reserved)
(6) USB membrane line
(7) Direct control key interface X11
(8) I/O USB cable K1
(9) Display cable K2

Connections for the operator panel front keyboard

(10) Connection for keyboard X8 of the operator panel front
(11) Connection for keyboard X10 of the operator panel front
(12) Connection for keyboard X7 of the operator panel front

1. Put the OP 010S and the replacement front plate face down on a flat, soft surface.
2. Loosen the casing screws (see Figure: "Rear side of operator panel front" in section: "Mounting") and remove the casing cover plate.

   The display holder with the keyboard controller (see Fig. above) will be visible underneath and, in a cutout of the mounting plate, the rear side of the USB interface (see Fig. below).
3. Disconnect the membrane connectors of the operator panel front keyboard from sockets X7, X8 and X10 (see note for procedure).
4. Disconnect the membrane connection of the USB connection cable (see Fig. below) (procedure: see Note below).
5. Remove the screws of the display support and lift it off.
6. Pull the USB interface off its seat and insert it into the replacement front plate.
7. Place the display support on the replacement front plate.
8. Re-assemble the operator panel front in reverse order (procedure: see Note).

Note

Descriptions of how to disconnect and connect the membrane connector can be found in chapter: "Connection Conditions", section: "Handling membrane connectors".

When tightening the screws, observe the torques (refer to the Section: "Technical data").

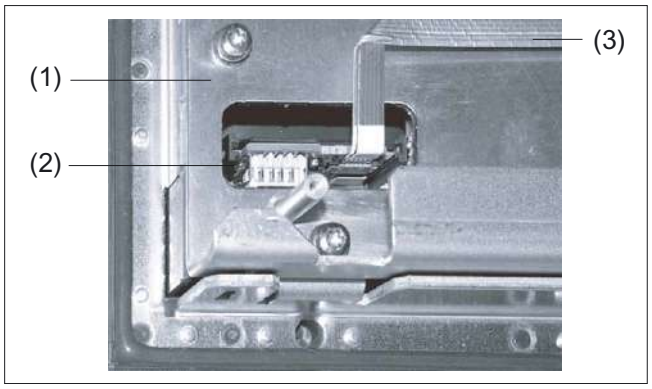

Figure 4-8 USB interface viewed from the operator panel rear side

(1) USB membrane line (see Fig.: "Keyboard controller")
(2) USB port
(3) Display support

Operator panel front: OP 010C

5

5.1 Description

The SINUMERIK OP 010C operator panel front and 10.4" TFT color display with a resolution of 640 x 480 pixels (VGA) features a 65-key mechanical keypad with 8 + 4 horizontal softkeys and 8 vertical softkeys.

The 6 hotkeys are designed with replaceable key covers for machine-specific adaptation. The key covers can be freely inscribed using laser.

The operator panel front is secured from the rear using special clamps supplied with the panel.

Validity

The description below applies to the OP 010C operator panel front
(order number 6FC5203–0AF01–0AA0)

Features

- 19" mounting format, 7 HU (height units)
- Panel cutout (W x H): 450 x 290 mm
- Slight mounting depth
- 10.4" TFT flat screen (color) with VGA resolution 640 x 480 pixels
- Mechanical short-stroke keys with alphabetic, numeric, cursor, control and hotkey key group
- Softkeys:
  - 1 horizontal row of 8 keys with softkey functions
  - 1 vertical row of 8 keys with softkey functions
- Shift key for switchover to the second key level (not for switching over the letters, since they are uppercase only)
- Status LEDs for power supply and overtemperature
- Front USB interface
- Degree of protection IP 54
- Attachment: tension jacks at the rear
- Can be combined with PCU, TCU, or Videolink receiver

5.2 Operator controls and indicators

5.2.1 View

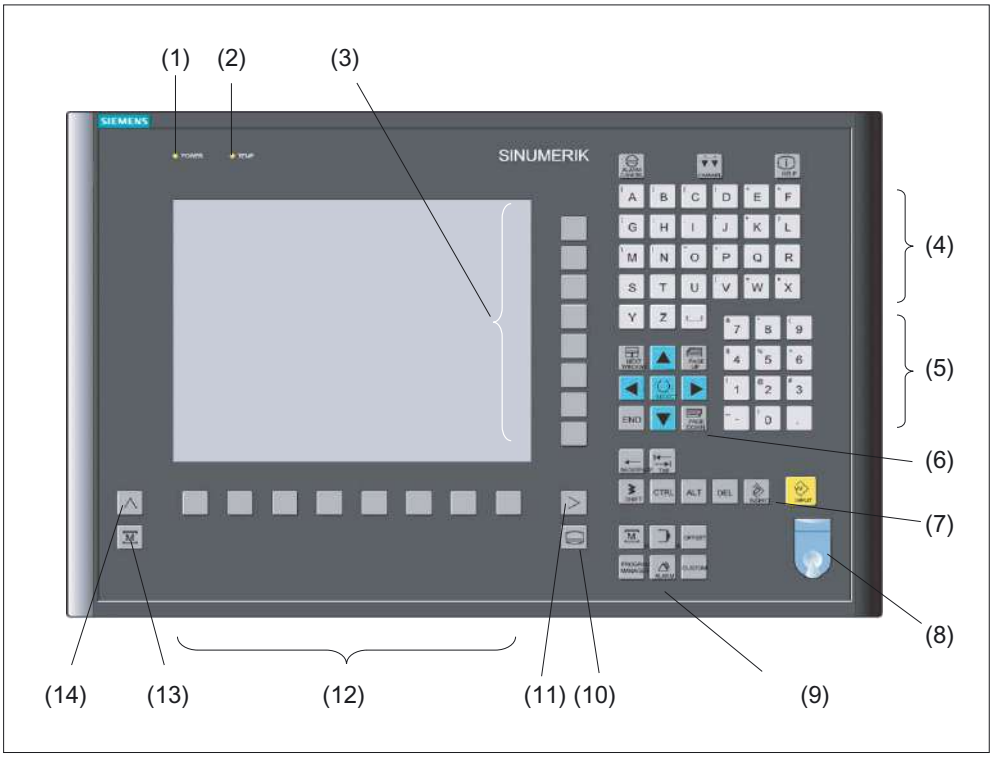

Figure 5-1 View of operator panel front OP 010C

(1) Status LED: POWER
(2) Status LED: TEMP
(illuminated LEDs indicate increased wear)
(3) Softkeys
(4) Alphabetic key group
(5) Numeric key group
(6) Cursor key group
(7) Control key group
(8) Front USB interface
(9) Hotkey group
(10) Area switchover
(11) Etc. key
(12) Softkeys
(13) Machine area
(14) Recall

5.2.2 Keyboard and display

Keyboard

Several keys and key pads are installed on the OP 010C operator panel front:

- The alphabetic key group contains the letters A - Z and the space character for entering text.
- The numeric key group contains the digits 0 - 9, the - character, and the decimal point for entering numerical characters and operators.
- The cursor key group is used to navigate on the screen.
- The control key group includes special functions.
- The hotkey group is used for the direct selection of operating areas.
- The area switchover shows the main menu.
- The etc. key allows for an expansion of the horizontal softkey bar in the same menu.
- The softkeys call up functions that are available on screen via a menu bar.
- The machine area key switches directly into the "Machine" operating area.
- The recall key jumps back to the superordinate menu. One window is closed.

The key symbols used on the operator panel front appear below along with the corresponding function keys on the PC keyboard.

Key	Function corresponds to PC key function	Key	Function corresponds to PC key function
ALARM CANCEL	Esc	END	End
1...n CHANNEL	F11	BACKSPACE	Backspace
HELP	F12	TAB	Tab
␣	Space	SHIFT	(only intended for internal keyboard changeover)
NEXT WINDOW	Home	CTRL	Ctrl key
PAGE UP	Page up	ALT	Alt key
PAGE DOWN	Page down	DEL	Delete
▲	Cursor up	INSERT	Insert
◀	Cursor left	INPUT	Enter
▶	Cursor right	⋀	F9

Key	Function corresponds to PC key function	Key	Function corresponds to PC key function
▼	Cursor down	MENU SELECT	F10
SELECT	5 (in numeric key group)	A, ..., Z	<Shift> A, ..., Z
>	<Shift> F9	M MACHINE	<Shift> F10
PROGRAM		PROGRAM MANAGER	
OFFSET		ALARM	
CUSTOM			

Display

Note

Pixel error acc. to DIN EN ISO 13406-2 Class II.

5.2.3 Screen saver

If a screen with high contrast is displayed unchanged for longer than 1 hour, the screensaver must be activated (screen switched dark) to protect the TFT display from "burn-in" of the last displayed screen.

For more information see:

/BEM/: HMI Embedded Operator's Guide

/IAM/: IM2 Installation and Start-up HMI Embedded; IM4 Installation and Start-up HMI Advanced

CAUTION
You may do irreversible damage to your TFT display if the screen saver is not activated.

5.3 Interfaces

This operator panel front has the following interfaces:

Front side

USB 1.1 to connect an external keyboard or mouse (see Fig:
"Front view of operator panel front" in section: "Control and display elements" --> "View")

Note

Note that the electromagnetic compatibility of commercially available peripheral devices operated via the USB port is usually rated for office use only.

For industrial use, components with a higher degree of certification are recommended.

Rear side

- Two ribbon cables for connecting the PCU (see figure below):
  - I/O USB cable K1 (ribbon cable):
    All signals that are used for the display interface and the connection of operator panel fronts
    (e.g. supply voltages)
  - Display cable K2
- Direct control key interface X11 (under cover plate)
- Interface X12 - reserved (under cover plate)

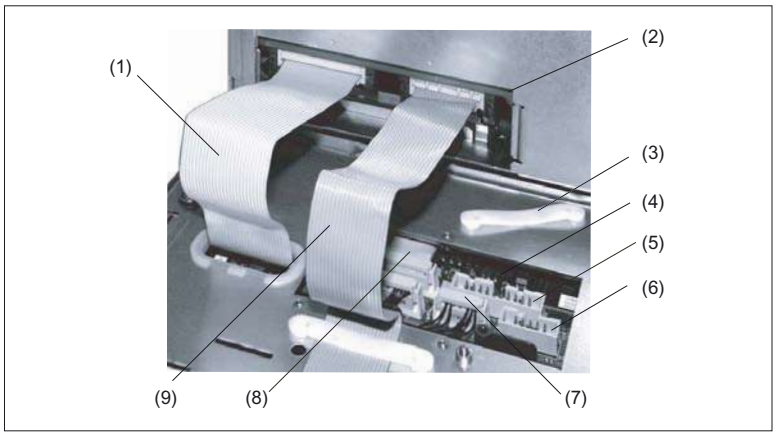

Figure 5-2 Connections on rear side of housing: Connections to PCU

(1) I/O USB cable K1
(2) PCU main board
(3) Cable clamp for connecting up direct key module
(4) Keyboard controller
(5) Direct control key interface X11
(6) Interface X12 (reserved)
(7) Connection X14 for backlight
(8) Connection X1 for I/O USB cable K1
(9) Display cable K2

Pin assignment

More details in Chapter: "Connection Conditions", section: "Secondary electrical conditions".

5.4 Mounting

5.4.1 Preparation for mounting

Table 5-1 Dimensions of the mounting hole (see diagram below)

Used PCU type	Width (mm)	Height (mm)	Depth + clearance (mm) measured from the mounting wall surface
PCU 20	450	290	76 + 10
PCU 50			108.2 + 10
PCU 70			149.2 + 10

Thanks to the tension jacks on the OP 010C, drill-holes or screw holes are not needed.

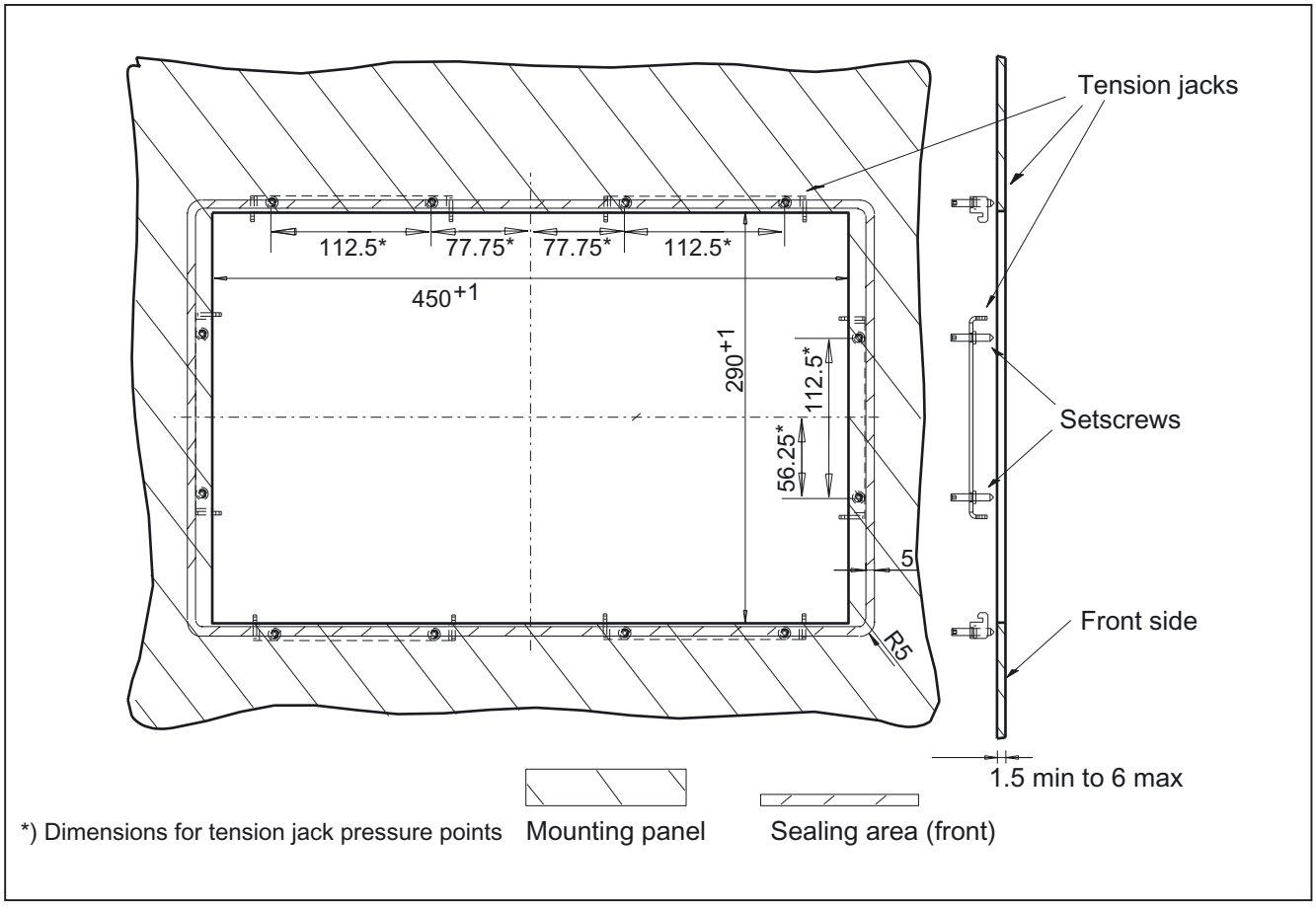

Figure 5-3 Dimension sheet for installing the OP 010C operator panel front

5.4.2 Assembling an OP 010C and a PCU

When combining an OP 010C and PCU, it is advisable to assemble them prior to installing them in the assembly panel.

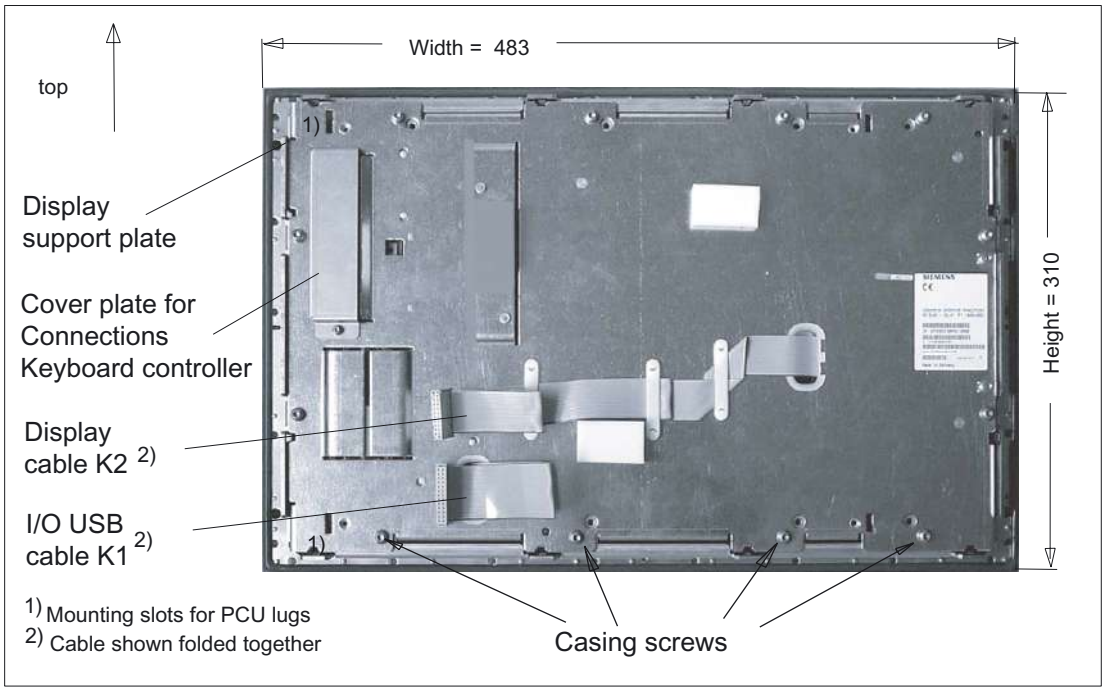

Figure 5-4 Rear side of operator panel front with position of interfaces and mounting slots

Procedure

To do this, proceed as described in the section: “OP 012”, section: "Assembling the OP 012 and PCU."

5.4.3 Mounting on the mounting wall

The clearance at the rear of the PCU must be at least 10 mm to ensure sufficient ventilation (see Figure: "Attaching the PCU to the OP 012 operator panel front", section “OP 012,” section: "Assembling the OP 012 and PCU").

For more detailed information, please refer to the relevant PCU sections and section: "Heat dissipation".

NOTICE
Permitted mounting position: deviating by up to 5º from the vertical. This value can be further restricted by attached components (PCU, video link receiver, ...).

Procedure

1. Insert the assembled components (operator panel front and PCU) from the front into the panel cutout (see Figure:. "Dimension sheet for installing the operator panel front," section: "Preparation for mounting").
2. Secure the operator panel front in the panel cutout from the rear using the tension jacks by tightening the setscrews (torque 0.4 - 0.5 Nm).

5.5 Technical specifications

Security			
Safety class	III; PELV acc. to EN 50178		
Degree of protection per EN 60529	Front panel IP54	Rear side IP 00	
Approvals	CE / cULus		
Electrical specifications			
Power supply (via I/O USB cable and display cable)	Display	Backlight inverter	Logic / USB (with / without load)
Voltage Current (typ./max. mA; approx.)	5 V +/- 5% 280 / 380	12 V +/- 10% 750 / 1000	5.2 V +/- 2% 350 / 1000
Power consumption	Typical, approx. 10 W	Maximum approx. 16 W	
Mechanical data			
Dimensions	Width: 483 mm Height: 310 mm Depth: 30 mm	Mounting depth: 20 mm incl. PCU 20: 76 mm *) incl. PCU 50: 108.2 mm *) incl. PCU 70: 149.2 mm *)	
Weight	Approx. 5 kg		
Tightening torques, max.	Tension jack screws: 0.5 Nm	M3 screws: 0.8 Nm	M4 screws: 1.8 Nm
Mechanical ambient conditions (with PCU)	**Operation**	**Transport** (in transport packaging)	
Vibratory load	10 -58 Hz: 0.075 mm 58 – 200 Hz: 9.8 m/s^2 3M4 per EN 60721-3-3	5 -9 Hz: 3.5 mm 9 – 200 Hz: 9.8 m/s^2 2M2 per EN 60721-3-2	
Shock stressing	50 m/s^2, 30 ms, 18 shocks 3M2 per EN 60721-3-3	300 m/s^2, 6 ms, 18 shocks 2M2 to EN 60721-3-2	
Climatic ambient conditions			
Cooling	By natural convection		
Condensation, spraying water and icing	Not permitted		
Supply air	Without caustic gases, dusts and oils		
	Operation	**Storage/shipping** (in transport packaging)	
Applicable standards	EN 60721-3-3	EN 60721-3-1 / -3-2	
Climate class	3K5	1K3 / 2K4	
Temperature limits	0 ... 45 ºC (at front) 0 ... 55 ºC (at rear)	-25 ... 55 ºC	
Temperature change	Max. 10 K/h	Max. 18 K/h	
Limits for relative humidity	5 ... 80% at 25°C	5 ... 95% at 25°C	
Permissible change in the relative air humidity	max. 1% /min		

Display	
Size / resolution	10.4 " TFT / 640 x 480 pixels
MTBF backlight	typ. 50 000 h at 25 ºC (dependent on the temperature)

*) Plus 10 mm clearance

5.6 Replacement parts

5.6.1 Overview

The diagram shows the OP 010C front plate as an individual part.

The components available as spare parts are combined in one overview

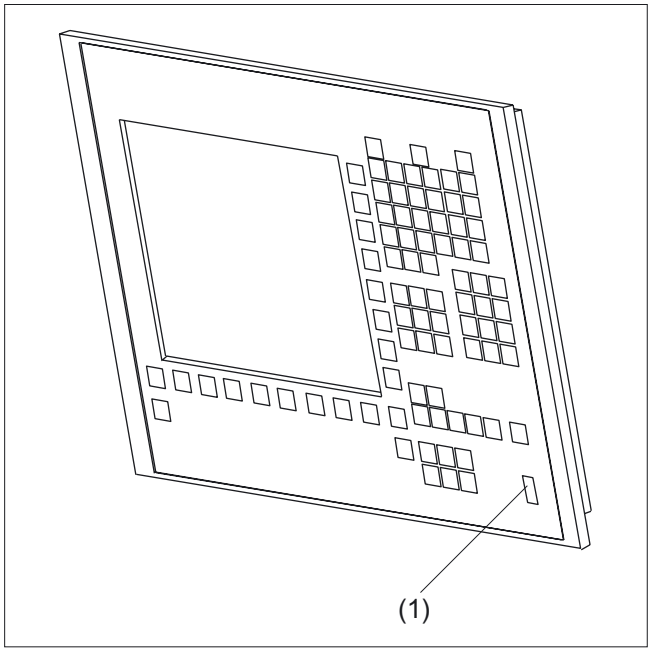

Figure 5-5 Front plate of OP 010C

	Spare parts	Order number	Remarks
(1)	Cap for the USB port	6FC5248-0AF05-0AA0	Set of 10
	Key cover (for labeling)	6FC5248-0AF12-0AA0	Set with 90 ergo-gray items 20 red items 20 yellow items 20 green items 20 medium gray items
	Tension jacks	6FC5248-0AF06-0AA0	Set of 6

5.6.2 Replacement

Key covers

The key covers of the vertical softkeys (short stroke keys) of the SINUMERIK 840D/810D ManualTurn product can be replaced.
They are included in the delivery kit.

Procedure

1. Lever the key cover of the short stroke key up and off.
2. Press the new key cover onto the frame of the short stroke key.

Operator panel front: OP 012

6

6.1 Description

The SINUMERIK OP 012 operator panel front and 12.1" TFT color display with a resolution of 800 x 600 pixels (SVGA) features a 59-key membrane keypad as well as 2 x (8 + 2) horizontal and 2 x 8 vertical softkeys. The 2 x 8 vertical softkeys can be used as direct keys.

The optional SINUMERIK direct key module provides an additional connection of the 2 x 8 vertical softkeys as direct keys to the PROFIBUS DP, if no pushbutton panel or machine control panel with connection of the direct keys is available.

Securing is done from the rear using special clamps that are included in the delivery kit.

Validity

The description below applies to the OP 012 operator panel front **(order number 6FC5203–0AF02–0AA1)**

Features

- 19" mounting format, 7 HU (height units)
- Panel cutout (W x H): 450 x 290 mm
- Slight mounting depth
- 12.1" TFT flat screen (color) with SVGA resolution 800 x 600 pixels
- Membrane keyboard with alphabetic, numeric, cursor, and control keypad
- Soft keys/direct keys:
  - 2 x 8 horizontal rows of keys with softkey function
  - 2 x 8 vertical rows of keys with softkey and direct control key functions
  - Direct control keys via direct control key module (optional), PP031 MC or directly connectable to the I/Os
- Shift key for switchover to the second key level (not for switching over the letters, since they are uppercase only)
- Integrated mouse
- Status LEDs for power supply and overtemperature
- Front USB interface
- IP65 degree of protection
- Attachment: tension jacks at the rear
- Can be combined with PCU, TCU, or Videolink receiver

6.2 Operator controls and indicators

6.2.1 View

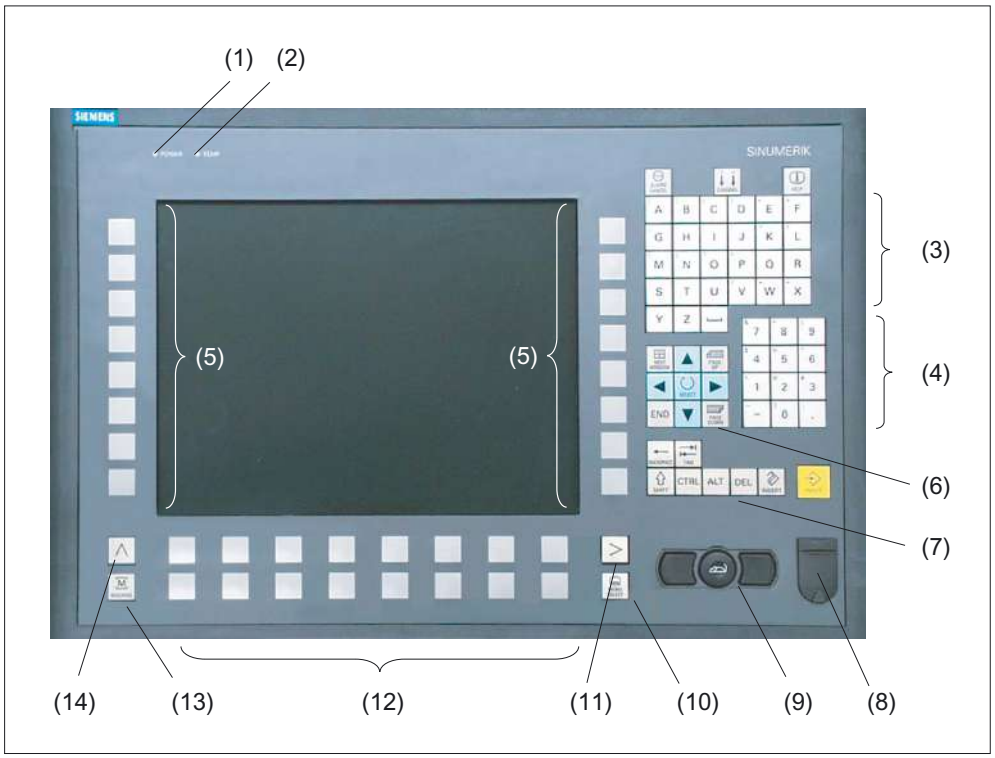

Figure 6-1 Front view of operator panel front OP 012

(1) Status LED: POWER
(2) Status LED: TEMP
(illuminated LEDs indicate increased wear)
(3) Alphabetic key group
(4) Numeric key group
(5) Softkeys and direct keys
(6) Cursor key group
(7) Control key group
(8) Front USB interface
(9) Mouse
(10) Area switchover
(11) Etc. key
(12) Softkeys
(13) Machine area
(14) Recall

6.2.2 Keyboard and display

Keyboard

Several keys and key pads are installed on the operator panel front:

- The alphabetic key group contains the letters A - Z and the space character for entering text.
- The numeric key group contains the digits 0 - 9, the - character and the decimal point for entering numeric characters and operators.
- The cursor key group is used to navigate on the screen.
- The control key group includes special functions.
- The mouse comprises the actuation field (corresponds to the function of a tracker ball) and two mouse keys for navigation.
- The area switchover shows the main menu.
- The etc. key allows for an expansion of the horizontal softkey bar in the same menu.
- The softkeys call up functions that are available on screen via a menu bar.
- The machine area key switches directly into the "Machine" operating area.
- The recall key jumps back to the superordinate menu. One window is closed.

The key symbols used on the operator panel front appear below along with the corresponding function keys on the PC keyboard.

Key	Function corresponds to PC key function	Key	Function corresponds to PC key function
ALARM CANCEL	Esc	END	End
1...n CHANNEL	F11	BACKSPACE	Backspace
HELP	F12	TAB	Tab
␣	Space	SHIFT	(only intended for internal keyboard changeover)
NEXT WINDOW	Home	CTRL	Ctrl key
PAGE UP	Page up	ALT	Alt key
PAGE DOWN	Page down	DEL	Delete
▲	Cursor up	INSERT	Insert
◀	Cursor left	INPUT	Enter
▶	Cursor right	⋀	F9

Key	Function corresponds to PC key function	Key	Function corresponds to PC key function
▼	Cursor down	MENU SELECT	F10
◯ SELECT	5 (in numeric key group)	A, ..., Z	<Shift> A, ..., Z
>	<Shift> F9	M MACHINE	<Shift> F10

Display

Note

Pixel error acc. to DIN EN ISO 13406-2 Class II.

6.2.3 Screen saver

If a screen with high contrast is displayed unchanged for longer than 1 hour, the screensaver must be activated (screen switched dark) to protect the TFT display from "burn-in" of the last displayed screen.

For more information see:

/BEM/: HMI Embedded Operator's Guide

/IAM/: IM2 Installation and Start-up HMI Embedded; IM4 Installation and Start-up HMI Advanced

CAUTION
You may do irreversible damage to your TFT display if the screen saver is not activated.

6.3 Interfaces

The operator panel front has the following interfaces:

Front side

USB 1.1 to connect an external keyboard or mouse (see Fig: "View of operator panel front" in section: "Control and display elements" --> "View")

Note

Note that the electromagnetic compatibility of commercially available peripheral devices operated via the USB port is usually rated for office use only.

For industrial use, components with a higher degree of certification are recommended.

Rear side

- Two ribbon cables for connecting the PCU (see figure below):
  - I/O USB cable K1 (ribbon cable):

    All signals that are used for the display interface and the connection of operator panel fronts

    (e.g. supply voltages)
  - Display cable K2
- Direct control interface X11 (under cover plate); signals from the 16 "vertical softkey" direct control keys
- Interface X12 - reserved (under cover plate)

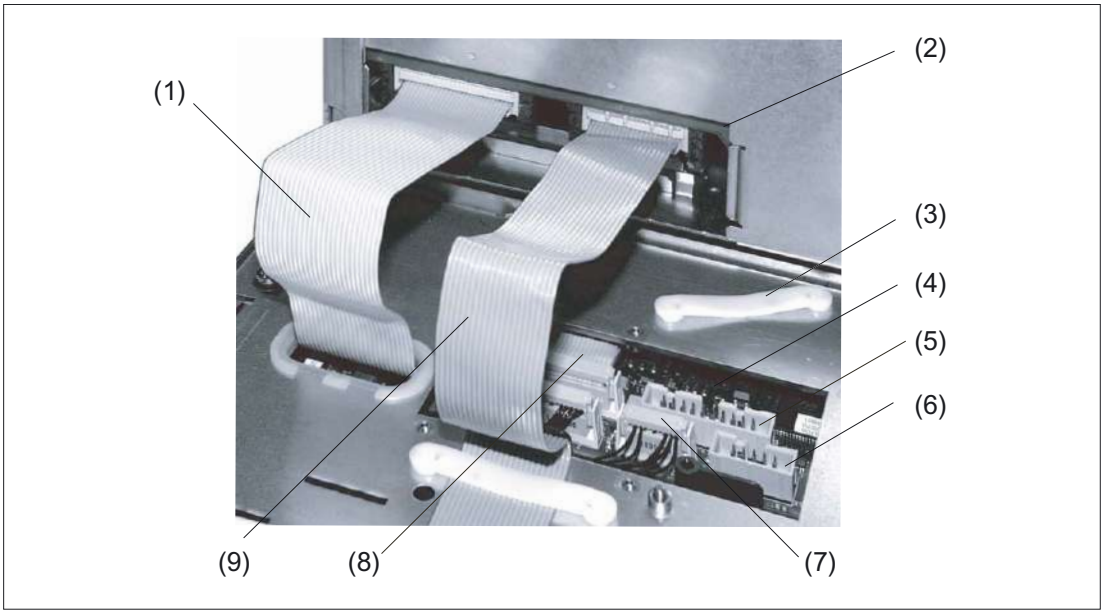

Figure 6-2 Connections on rear side of housing Connections to the PCU

(1) I/O USB cable K1
(2) PCU main board
(3) Cable clamp for connecting the direct key module
(4) Keyboard controller
(5) Direct control key interface X11
(6) Interface X12 (reserved)
(7) Connection X14 for backlight
(8) Connection X1 for I/O USB cable K1
(9) Display cable K2

Pin assignment and assignment of keys

More details in section: "Direct control key module."

6.4 Mounting

6.4.1 Preparation for mounting

Table 6-1 Dimensions of the mounting hole (see diagram below)

Used PCU type	Width (mm)	Height (mm)	Depth + clearance (mm) measured from the mounting wall surface
PCU 20	450	290	76 + 10
PCU 50			108.2 + 10
PCU 70			149.2 + 10

Thanks to the tension jacks on the OP 012, drill-holes or screw holes are not needed.

This retaining method also affords a degree of protection IP65 (but only in conjunction with a circumferential seal and when the protective USB cap is fitted).

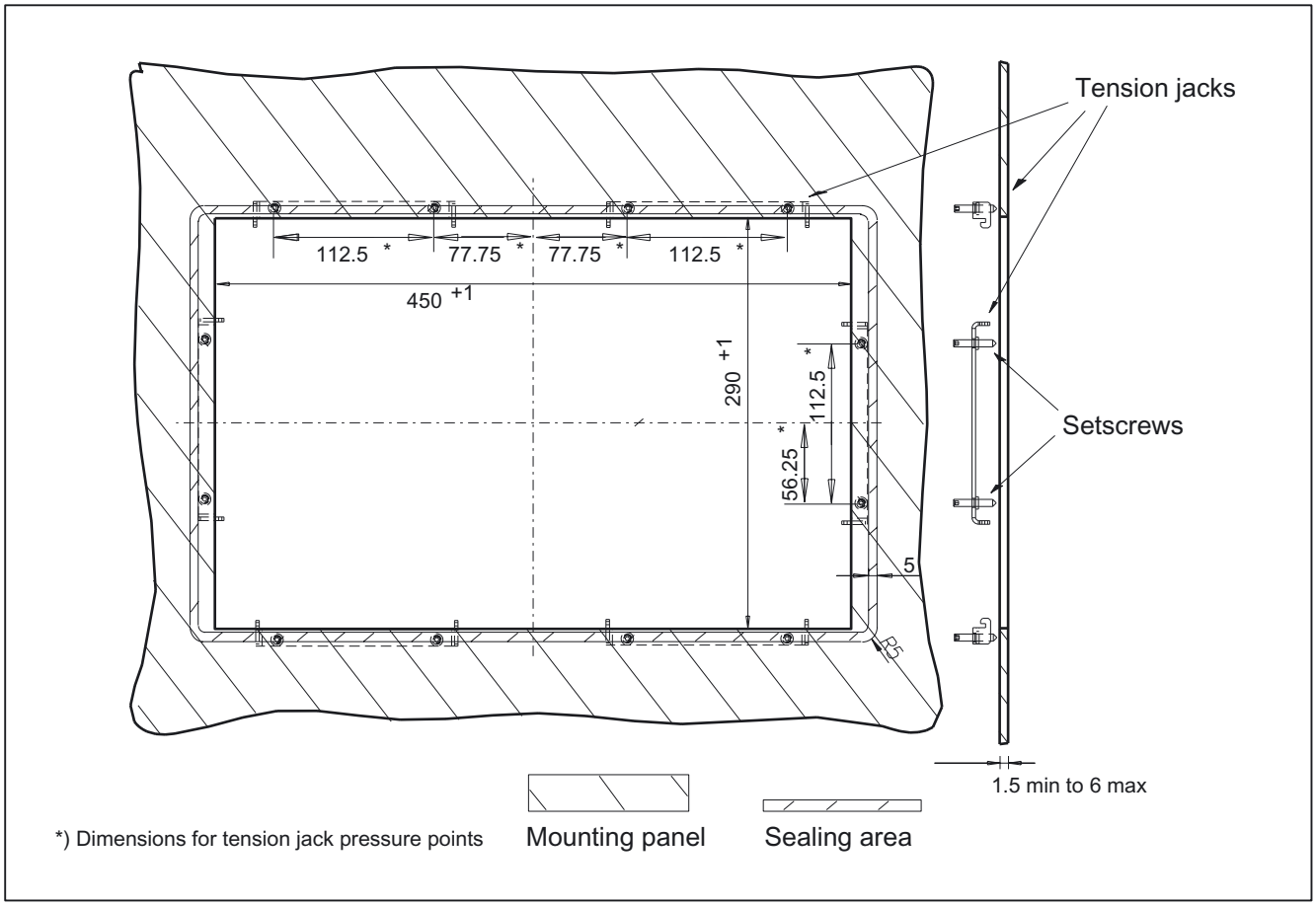

Figure 6-3 Dimension sheet for installing the OP 012 operator panel front

6.4.2 Assembling an OP 012 and a PCU

For a combination involving an OP 012 and PCU or Videolink receiver and possibly a direct control key module (see section: "Direct control key module") it is advisable to assemble the units in an assembly panel prior to installation.

Prerequisite

The PCU must now be bolted to the mounting brackets prior to assembly (if this has not already been done) (see section: "PCU 50", section: "Mounting")

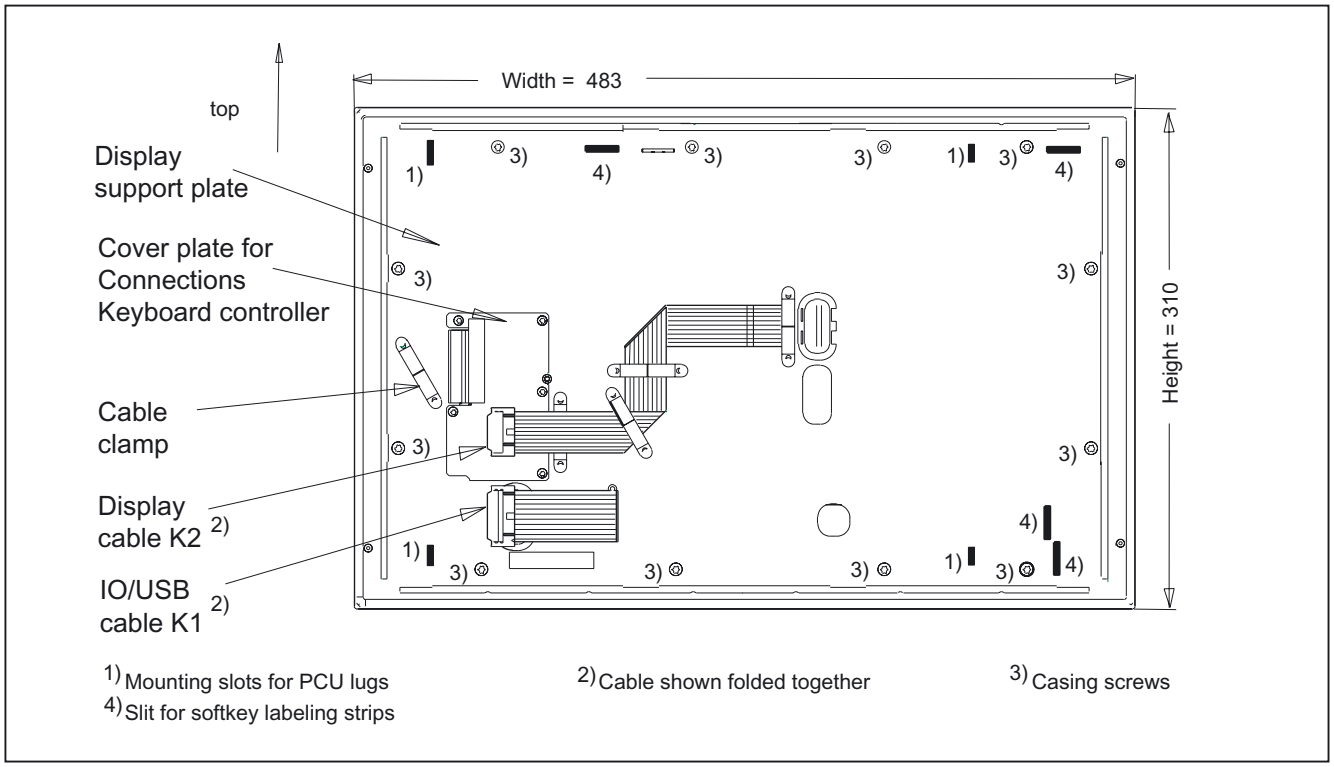

Figure 6-4 Rear side of OP 012

Procedure

1. Place the OP 012 face down on a flat, soft (to avoid scratches) surface.
   - Installation of direct control key module (see Chapter: "Direct control key module").
   - To install or replace the softkey labeling strips (see Section: "Softkey labels").
2. Remove the interface cover of the PCU (only PCU 50.3)
3. Place the PCU with the lugs of the bolted-on mounting brackets into the mounting slots on the OP 012 as shown by the white arrows in diagram **(A)**.

   To make it easier to insert the lugs, it can be helpful to reduce the 90 ° angle between the PCU and OP 012 by tilting the PCU downward as shown by the black arrow in the picture.

4. Insert the cable connectors K1 and K2 of the OP 012 into the plug connectors behind the opening in the PCU casing (see gray arrows in diagram **(A)**]. Make sure that the connectors lock in audibly and that the locks [see arrows in Fig: **(B)**] are closed.
5. Swivel the PCU into its limit position [see Fig.: **(C)**] and secure it with knurled screws, tightening torque of 1.8 Nm [see Fig.: **(D)**].

(A) Assembling PCU and OP 012

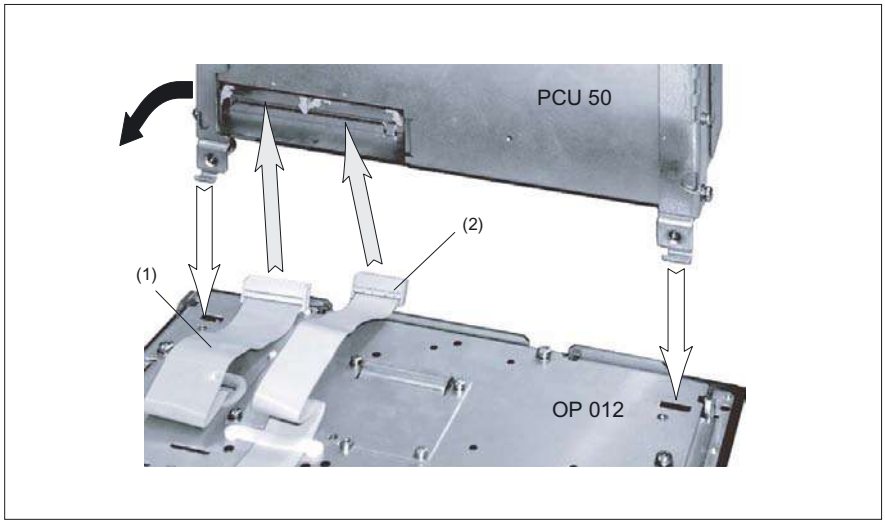

(1) I/O / USB cable K1
(2) Display cable K2

(B) Correct connection of IO/USB and display cables to the PCU

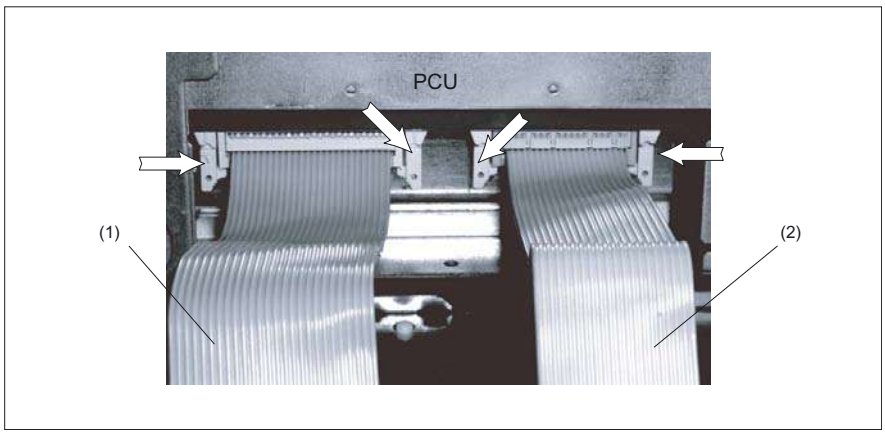

(1) I/O / USB cable K1
(2) Display cable K2

(C) Attaching the PCU to the OP 012 operator panel front (viewed from above)

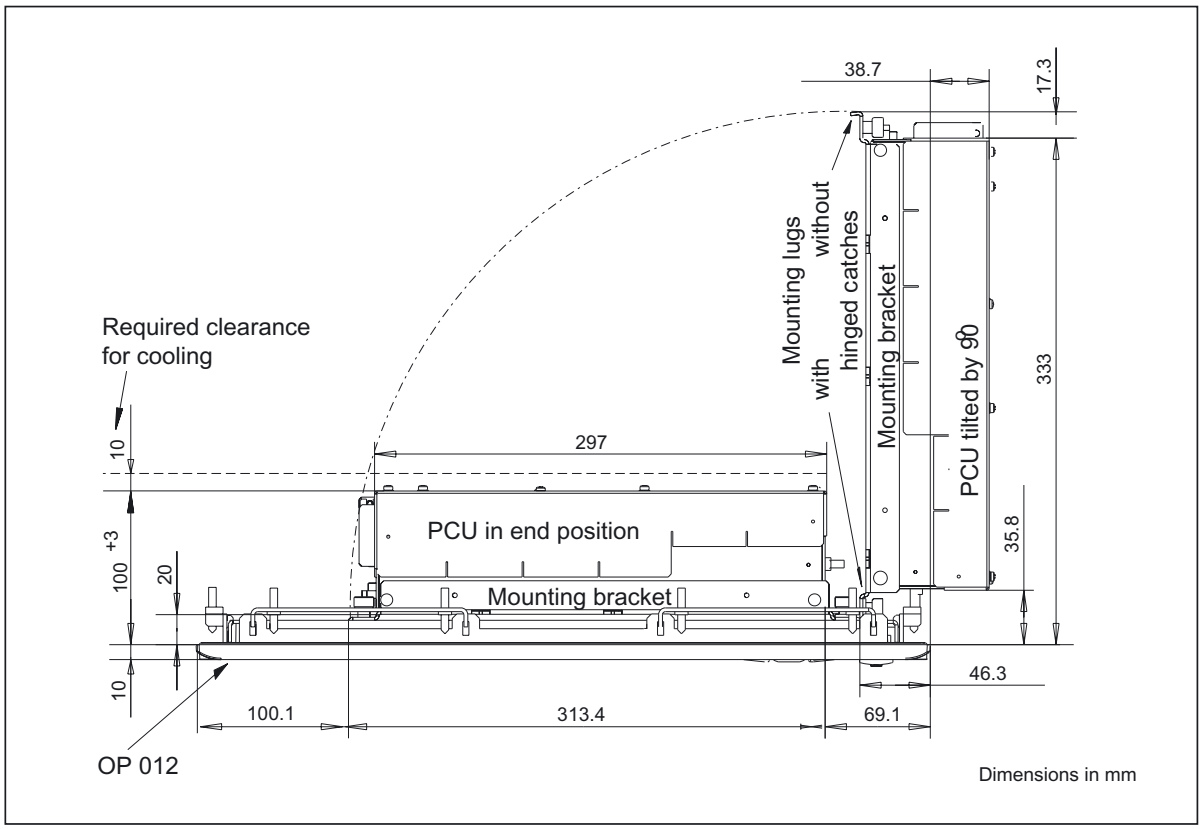

(D) OP 012 and PCU after assembly

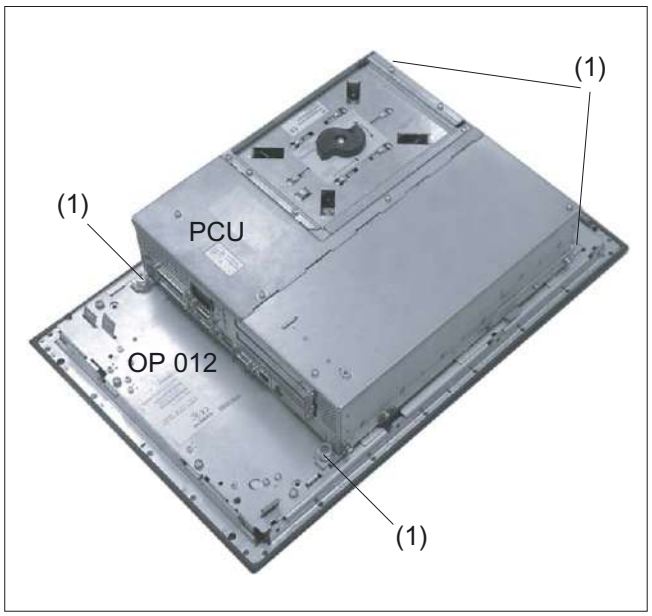

(1) Knurled screw

6.4.3 Mounting on the mounting wall

The clearance at the rear of the PCU must be at least 10 mm to ensure sufficient ventilation (see Figure: "Attaching the PCU to the OP 012 operator panel front", section “OP 012,” section: "Assembling the OP 012 and PCU").

For more detailed information, please refer to the relevant PCU sections and section: "Heat dissipation".

NOTICE
Permitted mounting position: deviating by up to 5º from the vertical. This value can be further restricted by attached components (PCU, video link receiver, ...).

Procedure

1. Insert the assembled components (operator panel front and PCU) from the front into the panel cutout (see Figure:. "Dimension sheet for installing the operator panel front," section: "Preparation for mounting").
2. Secure the operator panel front in the panel cutout from the rear using the tension jacks by tightening the setscrews (torque 0.4 - 0.5 Nm).

6.4.4 Softkey labeling

User-specific functions can be assigned to the horizontal and vertical softkey bars. Printed labeling strips can be used to label the softkeys.

Blank labels are already installed on delivery.

To make the labels, DIN-A4 film is available (Order No., see Section: "Spare parts").

Note

Use the "Arial" font to format text. This font is comparable to the "Univers S57" font, used by Siemens for the key labeling.

Proceed as follows

1. Letter the mat side of the film using a laser printer.
2. Cut the printed labels along the preprinted lines.
3. Remove the PCU retaining screws and swing out the PCU away from the operator panel front.
4. Insert the strips into the slots provided on the rear side of the operator front panel.
5. Swing the PCU back to the operator panel and secure by tightening the screws.

If the operator panel front and PCU are dismantled, omit steps 3 and 5.

6.5 Technical specifications

Safety			
Safety class	III; PELV acc. to EN 50178		
Degree of protection per EN 60529	Front side IP65	Rear side IP 00	
Approvals	CE / cULus		
Electrical specifications			
Power supply (via I/O USB cable and display cable)	Display	Backlight inverter	Logic / USB (with / without load)
Voltage Current (typ./max. mA; approx.)	5 V +/- 5% 280 / 380	12 V +/- 10% 750 / 1000	5.2 V +/- 2% 350 / 1200
Power consumption	Typical, approx. 16 W	Maximum approx. 24 W	
Mechanical data			
Dimensions	Width: 483 mm Height: 310 mm Depth: 30 mm	Mounting depth: 20 mm incl. PCU 20: 76 mm *) incl. PCU 50: 108.2 mm *) incl. PCU 70: 149.2 mm *)	
Weight	Approx. 5 kg		
Tightening torques, max.	Tension jack screws: 0.5 Nm	M3 screws: 0.8 Nm	M4 screws: 1.8 Nm
Mechanical ambient conditions (with PCU)	**Operation**	**Transport** (in transport packaging)	
Vibratory load	10 -58 Hz: 0.075 mm 58 – 200 Hz: 9.8 m/s^2 3M4 per EN 60721-3-3	5 -9 Hz: 3.5 mm 9 – 200 Hz: 9.8 m/s^2 2M2 per EN 60721-3-2	
Shock stressing	50 m/s^2, 30 ms, 18 shocks 3M2 per EN 60721-3-3	300 m/s^2, 6 ms, 18 shocks 2M2 to EN 60721-3-2	
Climatic ambient conditions			
Cooling	By natural convection		
Condensation, spraying water and icing	Not permitted		
Supply air	Without caustic gases, dusts and oils		
	Operation	**Storage/shipping** (in transport packaging)	
Applicable standards	EN 60721-3-3	EN 60721-3-1 / -3-2	
Climate class	3K5	1K3 / 2K4	
Temperature limits	0 ... 45 ºC (at front) 0 ... 55 ºC (at rear)	-20 ... 60ºC	
Temperature change	Max. 10 K/h	Max. 18 K/h	
Limits for relative humidity	5 ... 80% at 25°C	5 ... 95% at 25°C	
Permissible change in the relative air humidity	max. 1% /min		

Display	
Size / resolution	12.1 " TFT / 800 x 600 pixels
MTBF backlight	typ. 50 000 h at 25 ºC (dependent on the temperature)

*) Plus 10 mm clearance

6.6 Replacement parts

6.6.1 Overview

The diagram shows the OP 012 operator panel front dismantled into its individual parts.
The components provided with an order number are available as individual spare parts.

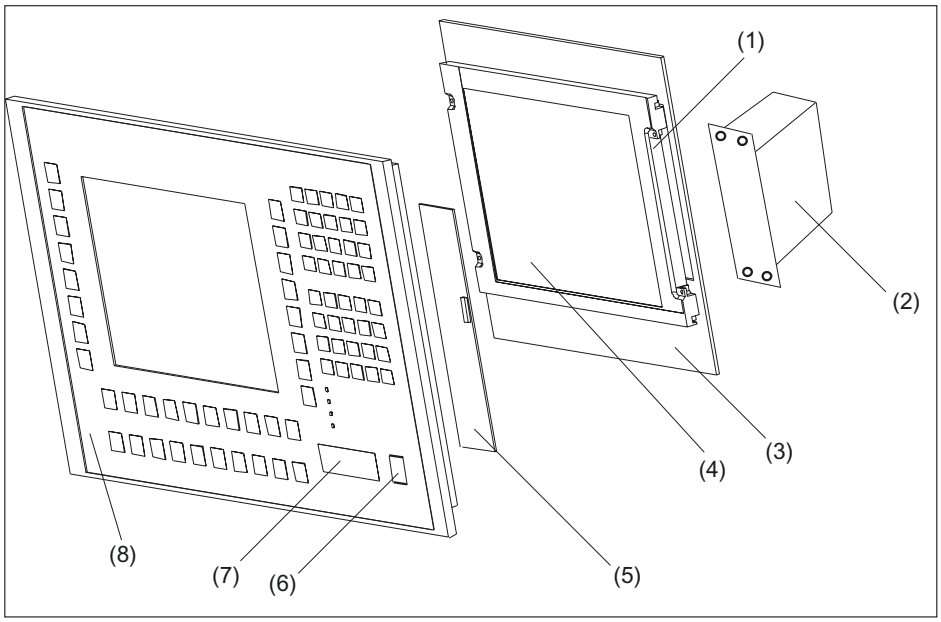

Figure 6-5 Individual parts for the OP 012 operator panel front

(1)	Backlight with backlight inverter		
	Spare parts	**Order number**	**Remarks**
(2)	Direct control key module	6FC5247-0AF11-0AA0	
(3)	Display support		
(4)	LCD unit		
(5)	Keyboard controller		
	Spare parts	**Order number**	**Remarks**
(6)	Cap for the USB port	6FC5248-0AF05-0AA0	Set of 10
(7)	USB mouse	6FC5247-0AF01-0AA0	
(8)	Operator panel front	6FC5248-0AF02-0AA0	Without LCD unit, without mouse, without keyboard controller, without direct control key module
	Slide-in labels *) (DIN A4 films)	6FC5248-0AF08-0AA0	Set of 3
	Tension jacks	6FC5248-0AF06-0AA0	Set of 6

*) The dimensions for production of film slide-in labels for softkey labeling can be seen in the following diagram.

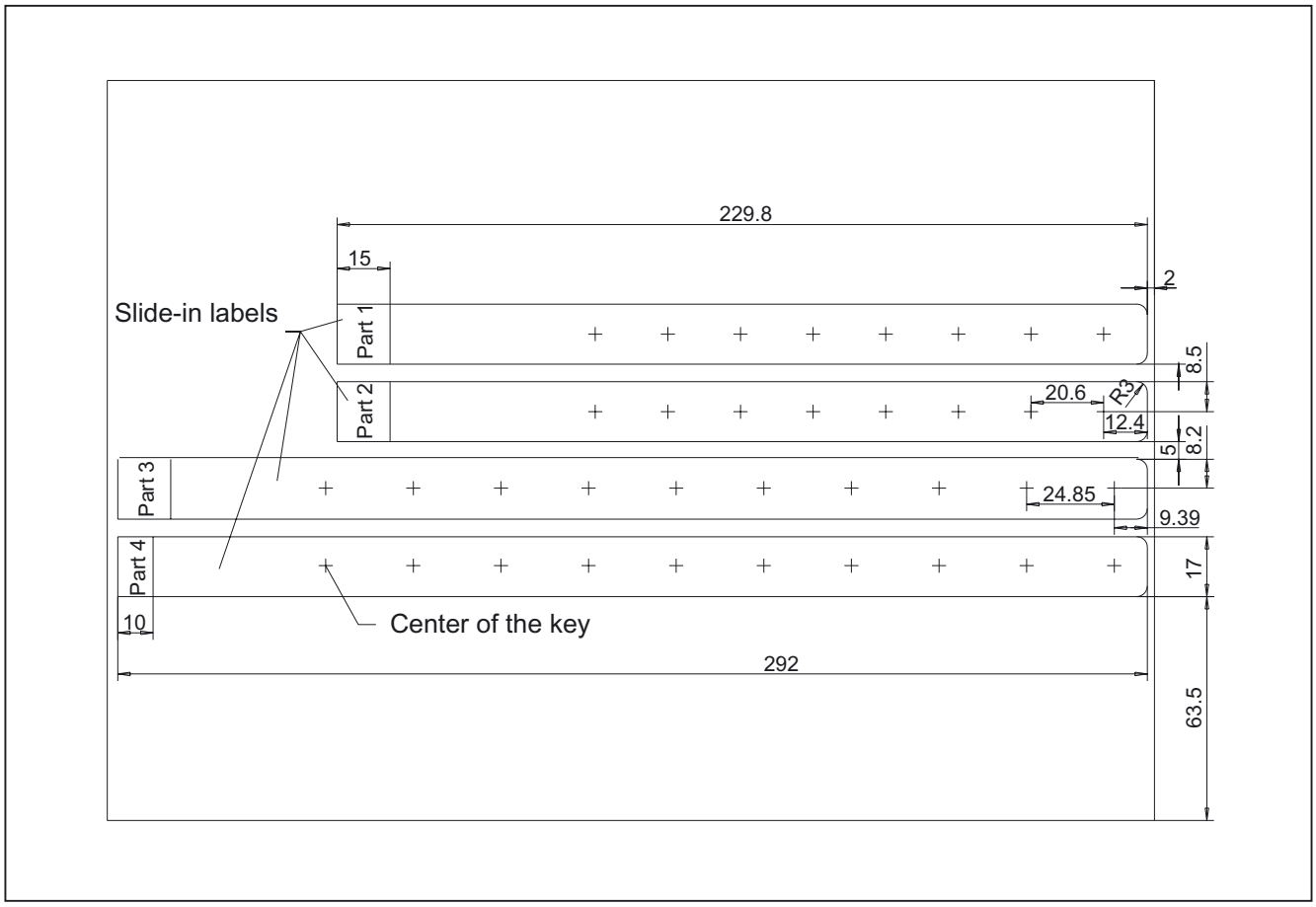

Figure 6-6 Dimensions for DIN A4 film

6.6.2 Replacement

CAUTION
Parts must only be replaced by trained personnel (danger of damage to sensitive components due to static electricity)!

USB cap / tension jack

The replacement of the USB sealing cap and tension jacks will not be described since it is simple and self-explanatory.

Film labels

The procedure for replacement is described in Section: "Softkey labels".

Operator panel front/mouse

When replacing the operator panel front, the previous mouse, LCD unit and keyboard controller can be used again. They are therefore disassembled and re-assembled after the appropriate component has been replaced.
This description is therefore valid for both the operator panel front and the mouse.

Note

We recommend that the keypad controller is re-used so that the control parameters that have been programmed-in are not lost.

Procedure

1. Put the OP 012 face down on a flat, soft surface and loosen the 12 casing screws (see figure:. “OP 012 rear side,” section: "Assembling an OP 012 and PCU").
2. Remove the softkey labeling strips and the cover plate.
3. Remove connector X14 for the backlight and the IO-USB cable K1 from the keyboard controller (see following Fig.).
4. Lift off the display support and the display.
   In addition to the keyboard controller, the rear sides of the mouse and USB interface become visible.
5. After bending back the two lugs, withdraw the USB interface.
6. Disconnect the three membrane connectors of the operator panel front keyboard from sockets X7, X8 and X10 (Procedure: see Note).
7. Remove the fastening screws from the mouse and keyboard controller.
8. Lift USB interface, mouse and keyboard controller off the front plate.
   The interconnections may remain plugged.
9. Install the components into the new operator front panel in reverse order (procedure: see Note).

Note

Descriptions of how to disconnect and connect the membrane connector can be found in section: "Connection Conditions", section: "Handling membrane connectors."

When tightening the screws, observe the torques (refer to the Section: "Technical data").

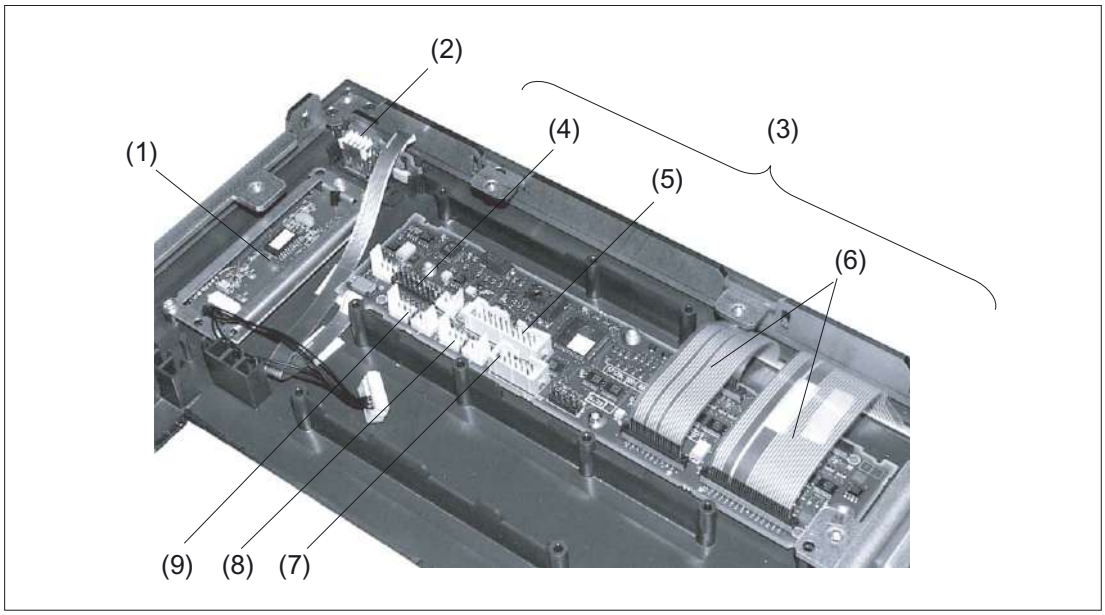

Figure 6-7 Replacement of operator panel front OP 012

(1) Mouse
(2) USB port
(3) Keyboard controller
(4) Connection X1 for IO-USB cable K1
(5) Direct control key connection X11
(6) Membrane connector for connecting the keyboard of the operator panel front
(7) Connection X12 (reserved)
(8) Connection X14 for backlight
(9) Connection X4 for mouse

Operator panel front: OP 012T

7

7.1 Description

The SINUMERIK OP 012T operator panel front for decentralized configuration enables physical separation from the SINUMERIK PCU. The PCU can be mounted in a control cabinet. With the SINUMERIK OP 012T operator panel front, up to four distributed operator panel fronts can be connected to a PCU. The distance between PCU and operator panel fronts is determined by the maximum distance of two access points (100 m).

Signal transmission between operator panel front and PCU via Industrial Ethernet Mixed operation with one operator panel front directly at the PCU is possible. Operation has the same authorization rights as operation on an operator panel front connected directly to the PCU. The screen on the passive operator panel is blacked out.

The SINUMERIK OP 012 operator panel front has a 12.1" TFT color display (with a resolution of 800 x 600 pixels [SVGA]) and a 65-key membrane keypad as well as 2 x (8 + 2) horizontal and 2 x 8 vertical softkeys. The 2 x 8 vertical softkeys can be used as direct control keys via the PROFIBUS DP.

The OP 012T is connected to the PCU via Ethernet as a Thin Client in its own subnet (via DHCP server to PCU) (see manual: "Operator Components", Edition 04.04, Section: "Distributed configuration with TCU").

Securing is done from the rear using special clamps that are included in the delivery kit.

Validity

The description below applies to the OP 012T operator panel front
(order number: 6FC5203-0AF06-1AA0)

Prerequisite

- PCU 50 or PCU 70, 1.2 GHz with Windows XP
- PCU base software for WinXP 7.4
- PCU base software for Thin Client

Features

- Dimensions (W x H x D): 365 mm x 440 mm x 60 mm (mounting depth incl. cable connectors: 81 mm)
- Panel cutout (W x H): 327 mm x 402 mm
- 12.1" TFT flat screen (color) with SVGA resolution 800 x 600 pixels
- Membrane keyboard with alphabetic, numeric, cursor, and control keypad

- Softkeys / direct keys
  - 2 x (8+2) horizontal softkeys
  - 2 x 8 vertical softkeys / direct control keys
  - The 2 x 8 softkeys can be used as direct control keys via the PROFIBUS DP
- Shift key for switchover to the second key level (not for switching over the letters, since they are uppercase only)
- Status LEDs for power supply and overtemperature
- IP65 degree of protection
- Attachment: tension jacks at the rear

7.2 Operator controls and indicators

7.2.1 View

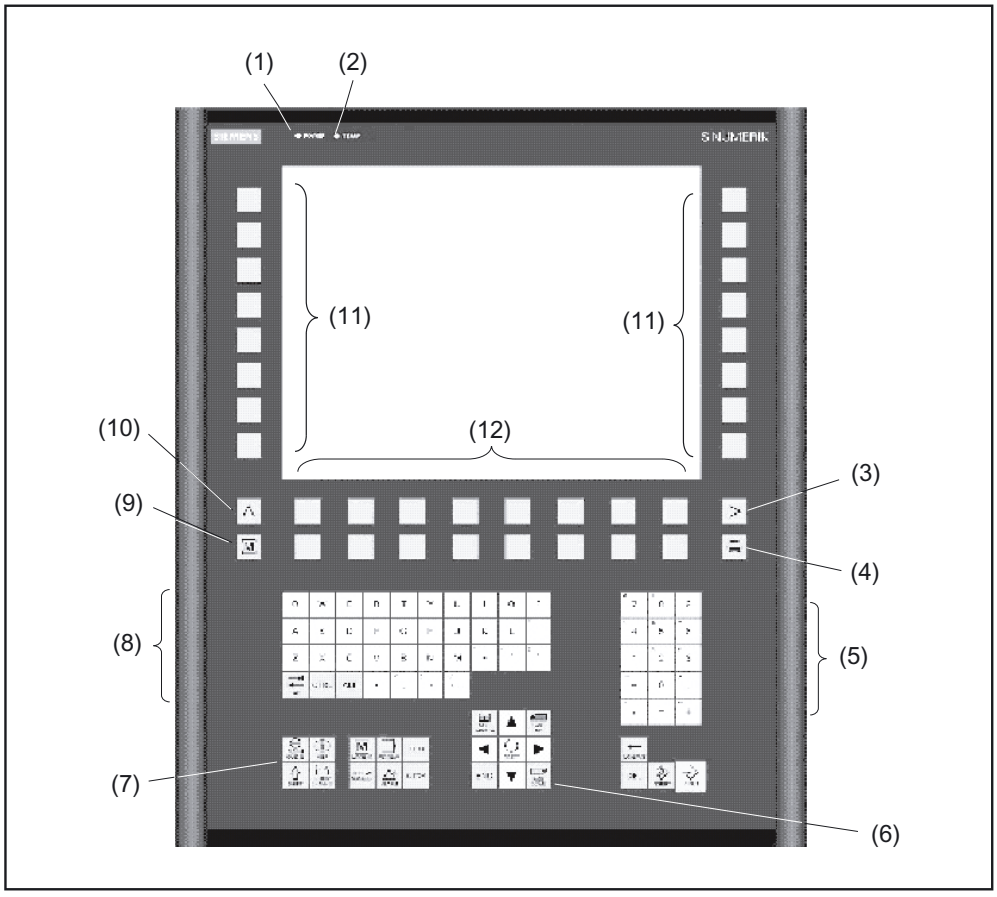

Figure 7-1 View of operator panel front OP 012T

(1) Status LED: POWER
(2) Status LED: TEMP
(illuminated LEDs indicate increased wear)
(3) Etc. key
(4) Area switchover
(5) Numeric key group
(6) Cursor key group
(7) Control key group
(8) Alphabetic key group
(9) Machine area
(10) Recall
(11) Softkeys and direct keys
(12) Softkeys

7.2.2 Keyboard and display

Keyboard

Several keys and key pads are installed on the operator panel front:

- The alphabetic key group contains the letters A - Z and the space character for entering text.
- The numeric key group contains the digits 0 - 9, the - character and the decimal point for entering numeric characters and operators.
- The cursor key group is used to navigate on the screen.
- The control key group includes special functions.
- The mouse comprises the actuation field (corresponds to the function of a tracker ball) and two mouse keys for navigation.
- The area switchover shows the main menu.
- The etc. key allows for an expansion of the horizontal softkey bar in the same menu.
- The softkeys call up functions that are available on screen via a menu bar.
- The machine area key switches directly into the "Machine" operating area.
- The recall key jumps back to the superordinate menu. One window is closed.

The key symbols used on the operator panel front appear below along with the corresponding function keys on the PC keyboard.

Key	Function corresponds to PC key function	Key	Function corresponds to PC key function
ALARM CANCEL	Esc	END	End
1...n CHANNEL	F11	BACKSPACE	Backspace
HELP	F12	TAB	Tab
␣	Space	SHIFT	(only intended for internal keyboard changeover)
NEXT WINDOW	Home	CTRL	Ctrl key
PAGE UP	Page up	ALT	Alt key
PAGE DOWN	Page down	DEL	Delete
▲	Cursor up	INSERT	Insert
◀	Cursor left	INPUT	Enter
▶	Cursor right	∧	F9

Key	Function corresponds to PC key function	Key	Function corresponds to PC key function
▼	Cursor down	MENU SELECT	F10
◯ SELECT	5 (in numeric key group)	A, ..., Z	<Shift> A, ..., Z
>	<Shift> F9	M MACHINE	<Shift> F10

Display

Note

Pixel error acc. to DIN EN ISO 13406-2 Class II.

7.2.3 Screen saver

If a screen with high contrast is displayed unchanged for longer than 1 hour, the screensaver must be activated (screen switched dark) to protect the TFT display from "burn-in" of the last displayed screen.

For more information see:

/BEM/: HMI Embedded Operator's Guide

/IAM/: IM2 Installation and Start-up HMI Embedded; IM4 Installation and Start-up HMI Advanced

CAUTION
You may do irreversible damage to your TFT display if the screen saver is not activated.

7.3 Interfaces

The OP 012T operator panel front provides the following interfaces:

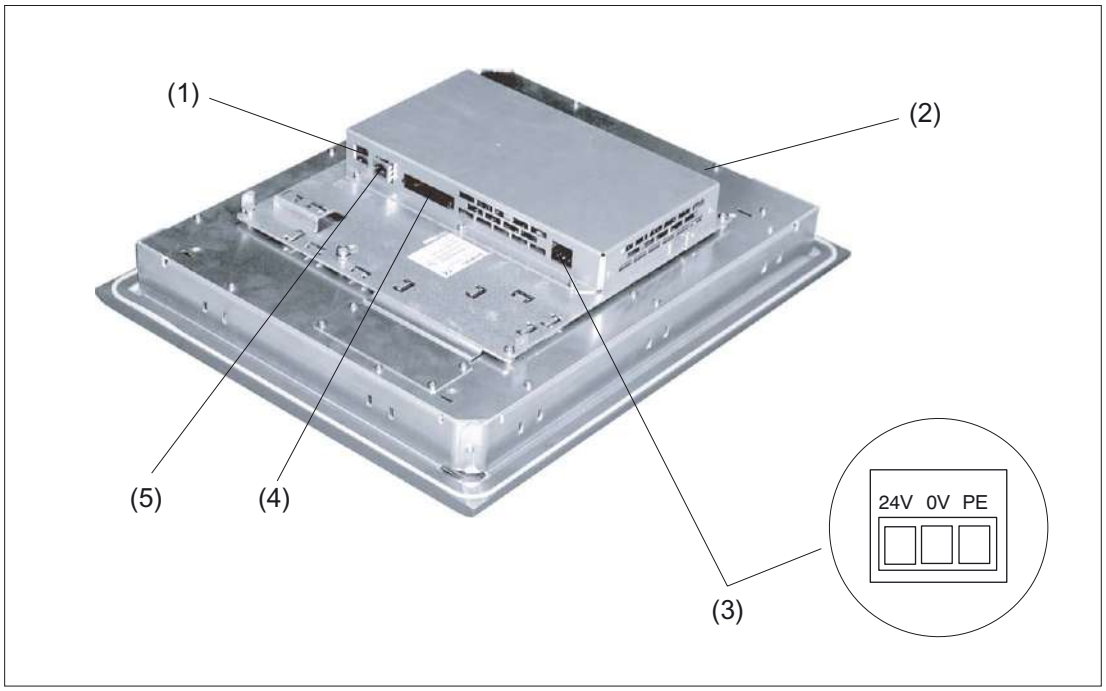

Figure 7-2 View of TCU with interfaces

	Function	Des.	Input / output	Type
(1)	USB port [2]	X203 / X204	O	2x USB-A
(2)	Direct control key interface [4]	X11	O	20-pin plug connector
(3)	Power supply DC 24 V [3]	X206	E	3-pin terminal block
(4)	CompactFlash interface [1]	X201	I/O	50-pin base
(5)	Ethernet port [2]	X202	O	8-pin RJ45 socket

[1] not enabled

[2] for pin assignment, see section: "Connection Conditions", section: "Secondary electrical conditions"

[3] for pin assignment, see Figure

[4] under the cover plate of the keyboard controller, for pin assignment, see section: "Direct control key module", section: "Interfaces".

7.4 Mounting

7.4.1 Preparation for mounting

Table 7-1 Dimensions of the mounting hole (see diagram)

Width (mm)	Height (mm)	Depth (mm)
327	402	60
		118 (with direct control key module)

Thanks to the tension jacks on the OP 012T, drill-holes or screw holes are not needed.

This retaining method also affords a degree of protection IP65 (but only in conjunction with a circumferential seal).

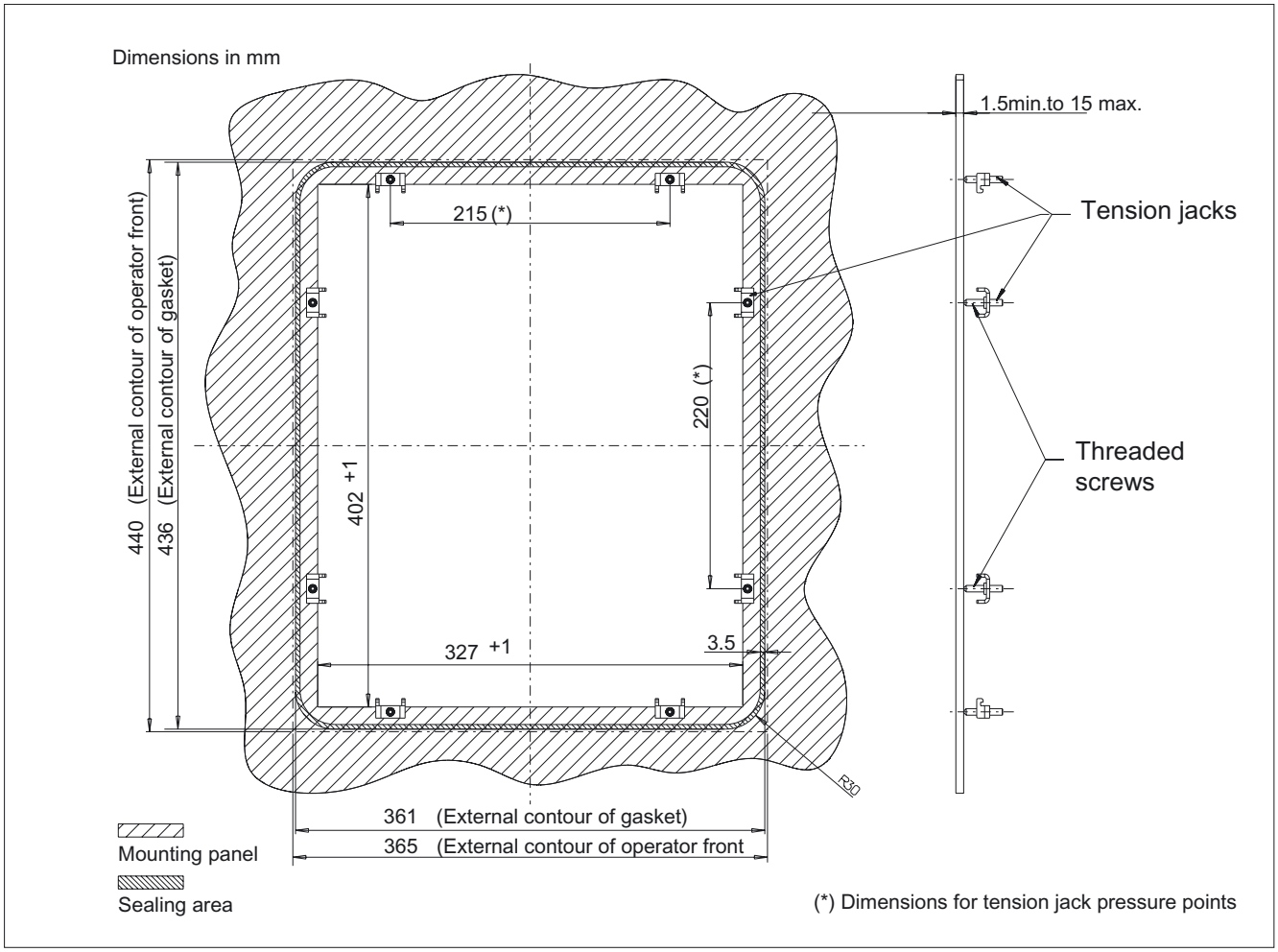

Figure 7-3 Dimension sheet for installing the OP 012T operator panel front

7.4.2 Mounting on the mounting wall

The clearance at the rear must be at least 10 mm to ensure sufficient ventilation.

Procedure

1. Insert the OP 012T (with direct control key module if required) in the panel cutout from the front.
2. Fix the operator panel front in the panel cutout from the rear using the six tension jacks by tightening the setscrews (torque 0.4 - 0.5 Nm).

Dimensional drawings of OP 012T without and with direct control key module

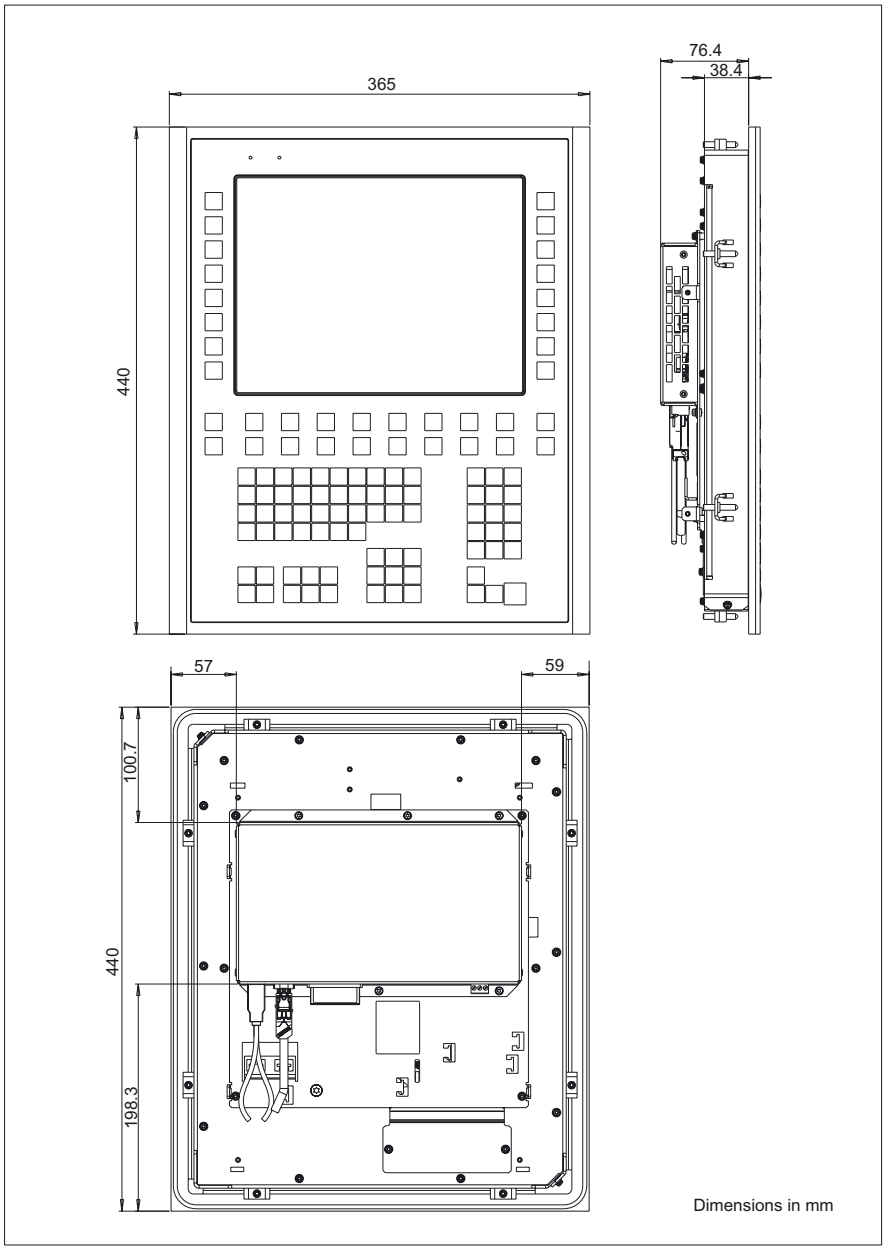

Figure 7-4 Dimensional drawing of OP 012T without direct control key module

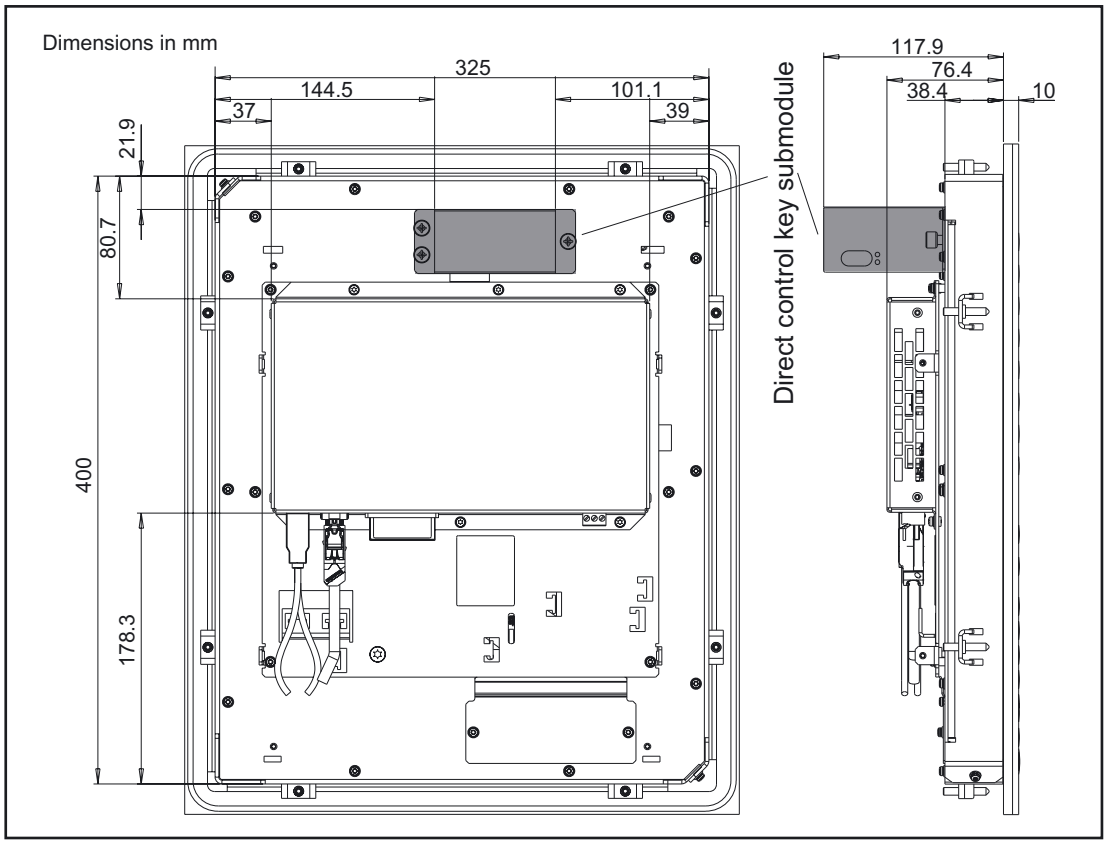

Figure 7-5 Dimensional drawing of OP 012T with direct control key module already installed

7.4.3 Direct control key module connection

Install the direct control key module as described in section: "Direct control key module". Connect it as shown in the diagram.

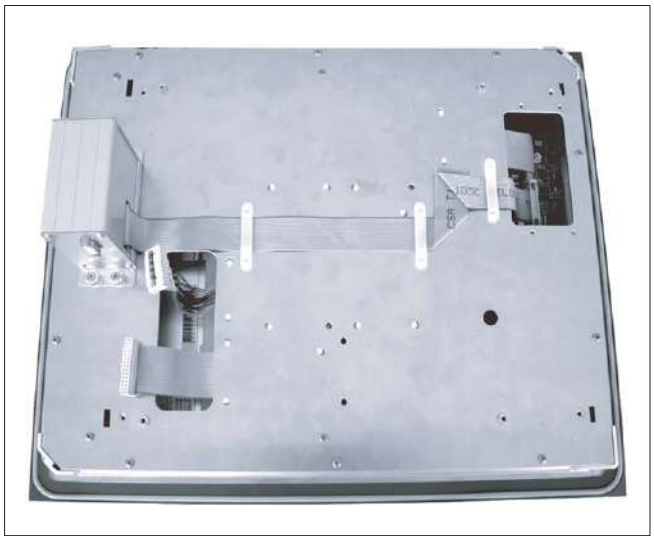

Figure 7-6 Routing of connecting cable for the direct control key module

7.5 Technical data

Safety			
Degree of protection to EN 60529	Front side IP65		Rear side IP 00
Electrical data			
Supply voltage	24 V DC (via TCU)		
Power consumption	Maximum approx. 36 W		
Mechanical data			
Dimensions (mm)	Width: 365	Height: 440	Depth: 60
Panel cutout (mm)	Width: 327	Height: 402	Depth: 81 *)
Weight	Approx. 5.9 kg (without direct control key module and without tension jacks)		
Tightening torques, max.	Tension jacks: 0.5 Nm		
Mechanical ambient conditions (with PCU)	**Operation**		**Transport** (in transport packaging)
Vibration stressing	10 – 58 Hz: 0.075 mm 58 – 200 Hz: 9.8 m/s^2 3M4 per EN 60721-3-3		5 – 9 Hz: 3.5 mm 9 – 200 Hz: 9.8 m/s^2 2M2 per EN 60721-3-2
Shock stressing	50 m/s^2, 30 ms, 18 shocks 3M2 per EN 60721-3-3		300 m/s^2, 6 ms, 18 shocks 2M2 to EN 60721-3-2
Climatic environmental conditions			
Cooling	By natural convection		
Condensation, spraying water and icing	Not permitted		
Air inlet	Without caustic gases, dusts and oils		
	Operation		**Storage/shipping** (in transport packaging)
Climate class	3K5		1K3 / 2K4
Temperature limits	0 ... 45 ºC (at front) 0 ... 55 ºC (at rear)		-20 ... 60ºC
Limit values for rel. humidity to DIN IEC 68-2-3, DIN IEC 68-2-30, DIN 68-2-56	5 ... 80% at 25 °C		5 ... 95% at 25 °C
	Temperature change max. 10 K/h. Non-condensing		
Display			
Size / resolution	12.1 " TFT / 800 x 600 pixels (SVGA)		

*) due to cable connector and ventilation clearance

7.6 Spare parts

The following components are available as spare parts for the OP 012T operator panel:

Spare parts	Order number	Remarks
Tension jacks	6FC5248-0AF14-0AA0	Set of 9

7.7 Accessories

The following components are available as accessories for the OP 012T operator panel:

Component	Order number	Remarks
Ethernet cable	6VX1840-2AH10	Standard cable for universal use
	6VX1840-3AH10	Trailing cable
Ethernet switch	6GK1102-6AA0	ELS TP 40 for linear network structures
	6GK1102-7AA0	ELS TP 80 for star-shaped network structures

Operator panel front: TP 012

8

8.1 Description

Validity

The description below applies to the TP 012 operator panel front
(order number 6FC5203–0AF07–0AA0)

Features

- Installation format 400 x 310mm, 7 HU (height units)
- Panel cutout (W x H): 368 x 290 mm
- Mounting depth in conjunction with PCU 50: 125 mm + 10 mm clearance, measured from surface of mounting panel
- Color display (Touch Screen) incl. Backlighting in 12.1”-TFT technology with a resolution of 800 x 600 pixels
- Status LEDs for power supply and overtemperature
- Front USB interface
- IP65 degree of protection
- Attachment: tension jacks at the rear
- Can be combined with the components PCU 50/70 under Windows XP
  - centralized (as described in this Section)
  - distributed (see Section: "Distributed Configuration")

Note

The Touch Panel TP 012 can be used in conjunction with customer-specific HMI software.

8.2 Operator controls and indicators

8.2.1 View

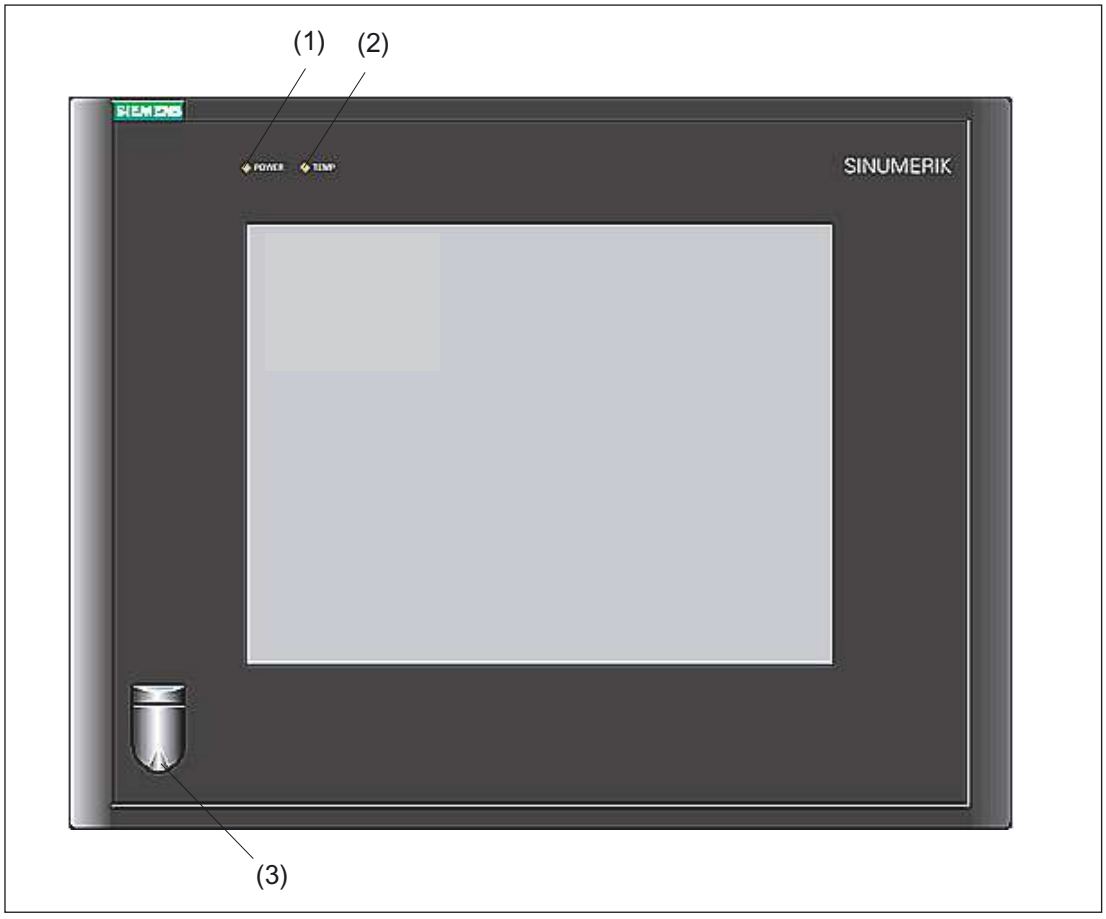

Figure 8-1 Front view of the operator panel TP 012

(1) Status LED: POWER

(2) Status LED: TEMP
(illuminated LEDs indicate increased wear.)

(3) Front USB interface for connecting an external keyboard or mouse

8.2.2 Operation

The panel is operated by touching the application-specific functions shown on the touch-sensitive display, e.g. by touching a displayed button.

CAUTION
Do not touch the display with pointed or hard objects. This may considerably reduce its service life.

8.2.3 Screen saver

If a screen with high contrast is displayed unchanged for longer than 1 hour, the screensaver must be activated (screen switched dark) to protect the TFT display from "burn-in" of the last displayed screen.

For more information see:

/BEM/: HMI Embedded Operator's Guide

/IAM/: IM2 Installation and Start-up HMI Embedded; IM4 Installation and Start-up HMI Advanced

CAUTION
You may do irreversible damage to your TFT display if the screen saver is not activated.

8.3 Interfaces

This operator panel front has the following interfaces:

Front side

USB 1.1 to connect an external keyboard or mouse (see Fig: "Front view of operator panel front" in section: "Control and display elements" --> "View")

Note

Note that the electromagnetic compatibility of commercially available peripheral devices operated via the USB port is usually rated for office use only.

For industrial use, components with a higher degree of certification are recommended.

Rear side

- Two ribbon cables for connecting the PCU (see figure below):
  - I/O–USB cable K1 (ribbon cable):
    All signals that are used for the display interface and the connection of operator panel fronts (e.g. supply voltages)
  - Display cable K2

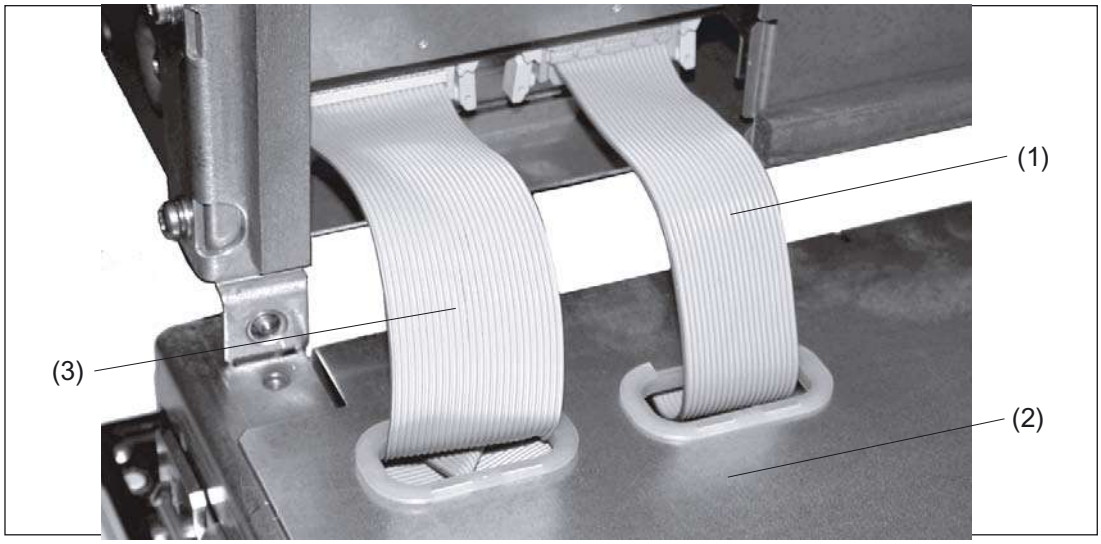

Figure 8-2 Connections on rear side of housing Connections to the PCU

(1) Display cable K2
(2) Back of operator panel
(3) I/O USB cable K1

Pin assignment

More details in section: "Connection Conditions," section: "Secondary electrical conditions."

8.4 Mounting

8.4.1 Preparation for mounting

Table 8-1 Dimensions of the mounting hole (see diagram below)

Used PCU type	Width (mm)	Height (mm)	Depth + clearance (mm) measured from the mounting wall surface
PCU 50	368	290	124.2 + 10
PCU 70			165.2 + 10

Thanks to the tension jacks on the TP 012, drill holes or screw holes are not needed.

This retaining method also affords a degree of protection IP65 (but only in conjunction with a circumferential seal and when the protective USB cap is fitted).

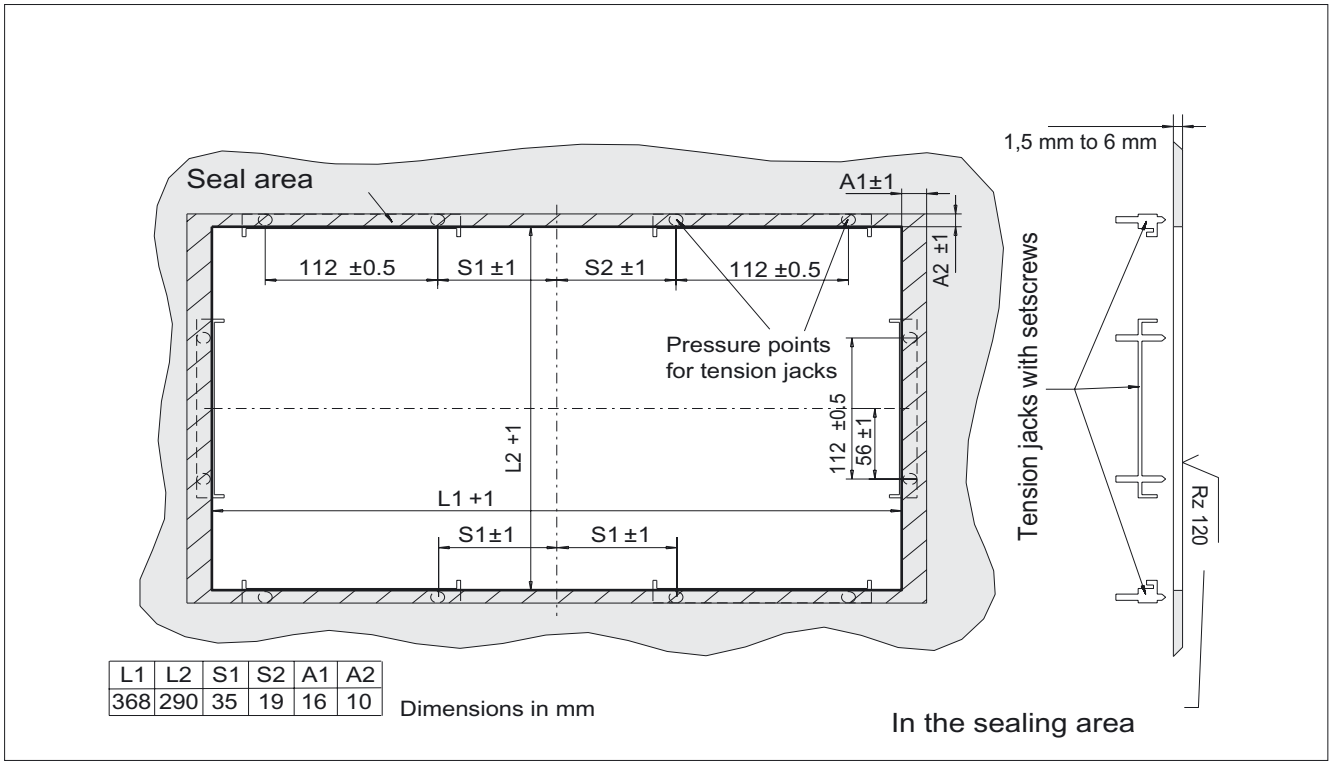

L1	L2	S1	S2	A1	A2
368	290	35	19	16	10

Figure 8-3 Dimension sheet for installing the TP 012 operator panel front

8.4.2 Assembling the TP 012 and PCU

With a centralized configuration, the operator panel front (TP 012) and the processing unit (PCU) are connected to each other using the piggyback method. It is advisable to connect the units in an assembly panel prior to installation.

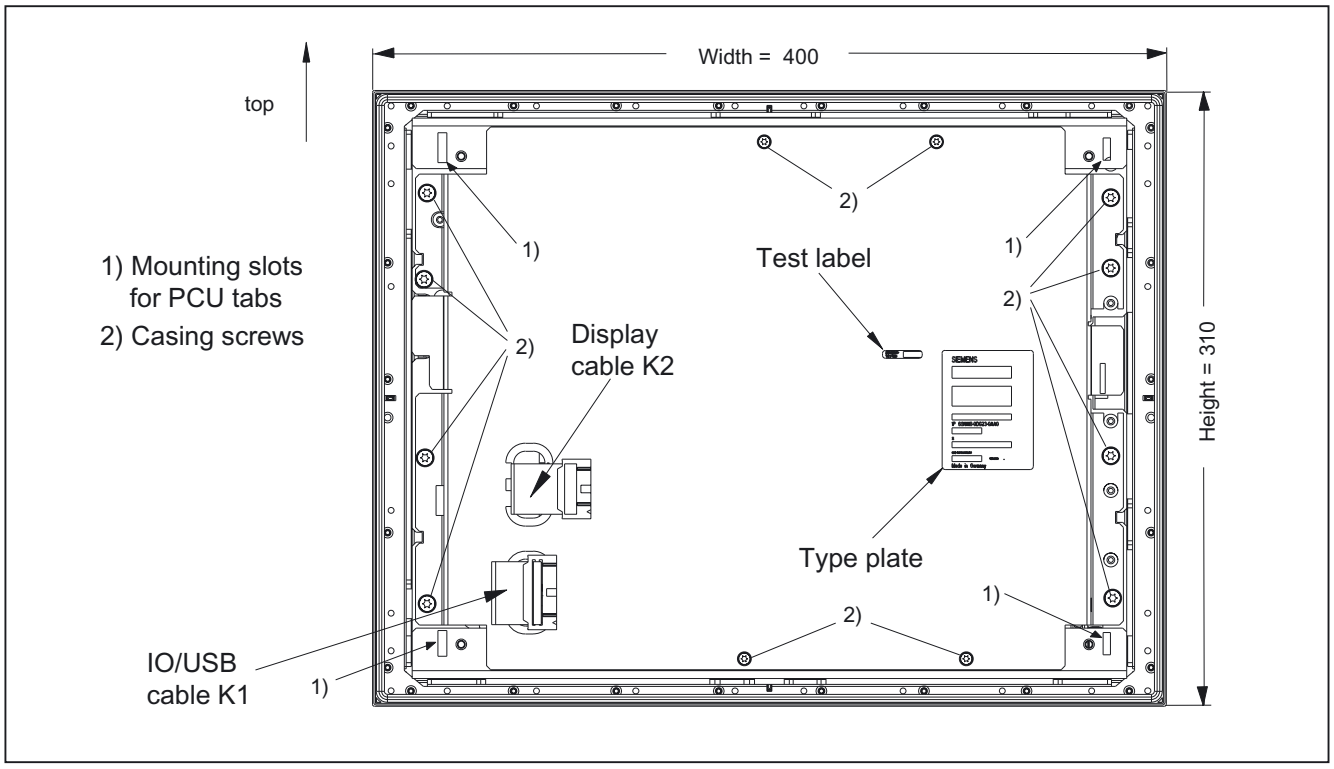

Figure 8-4 TP 012 rear side

Procedure

To do this, proceed as described in section: “OP 012,” section: "Assembling OP 012 and PCU 50".

8.4.3 Mounting on the mounting wall

The clearance at the rear of the PCU must be at least 10 mm to ensure sufficient ventilation (see following Figure).

For more details, see Section: "PCU 50" and in Section: "Heat dissipation."

NOTICE
Permitted mounting position: deviating by up to 5º from the vertical. This value can be further restricted by insalled components (PCU, video link receiver, ...).

Procedure

1. Insert the assembled components (operator panel front and PCU) from the front into the panel cutout (see Figure:. "Dimension sheet for installing the operator panel front", section: "Preparation for mounting").
2. Secure the operator panel front in the panel cutout from the rear using the tension jacks by tightening the setscrews (torque 0.4 - 0.5 Nm).

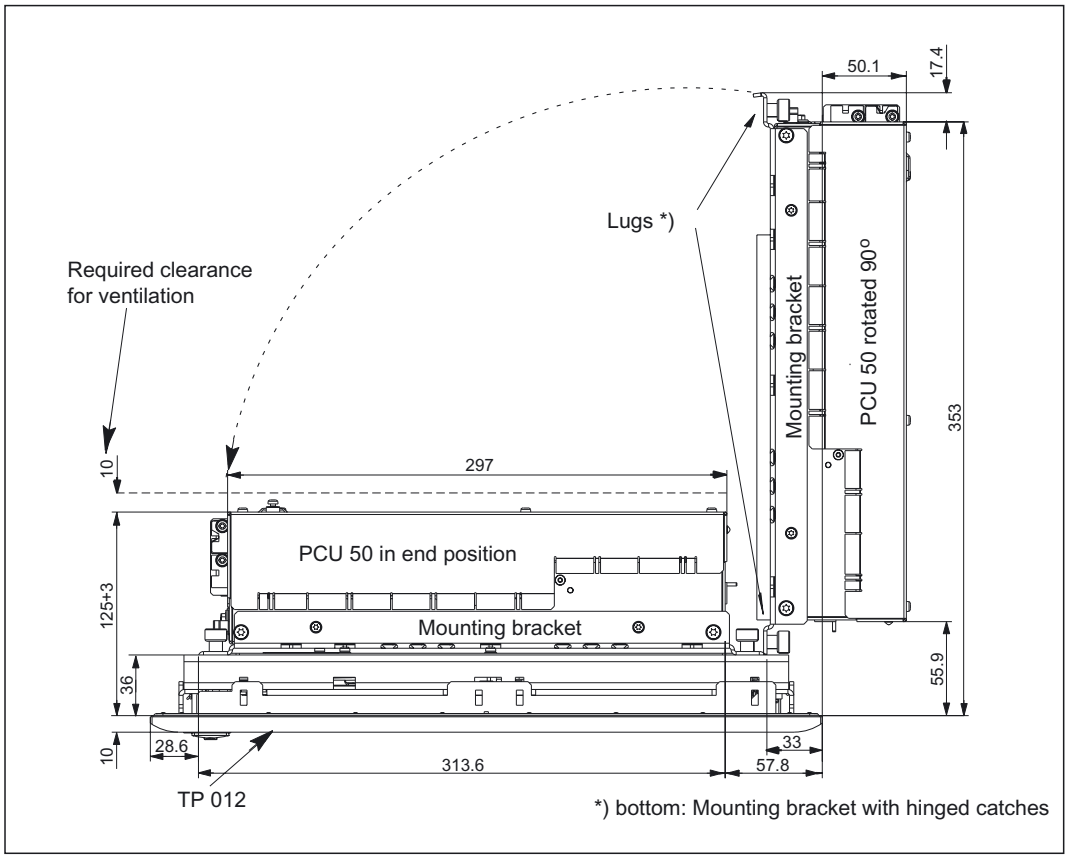

Figure 8-5 Mounting the PCU 50 to the TP 012 operator panel front (as seen from above)

8.4.4 Calibration of the touch screen

Whenever a new operator panel front is connected, a screen calibration must be performed.

Procedure

For a description of calibration, refer to Chapter: "PCU 50", section: "Calibration of the Touch Screen".

8.5 Technical specifications

Security			
Safety class	III; PELV acc. to EN 50178		
Degree of protection per EN 60529	Front side IP65	Rear side IP 00	
Approvals	CE / cULus		
Electrical specifications			
Power supply (via I/O USB cable and display cable)	Display	Backlight inverter	Logic / USB (with / without load)
Voltage Current (typ./max. mA; approx.)	5 V +/- 5% 280 / 380	12 V +/- 10% 750 / 1000	5.2 V +/- 2% 350 / 1000
Power consumption	Typical, approx. 15 W	Maximum approx. 20 W	
Mechanical data			
Dimensions	Width: 400 mm Height: 310 mm Depth: 51 mm	Mounting depth: 26 mm incl. PCU 50: 124.2 mm *) incl. PCU 70: 165.2 mm *)	
Weight	Approx. 5.5 kg		
Tightening torques, max.	Tension jack screws: 0.5 Nm	M3 screws: 0.8 Nm	M4 screws: 1.8 Nm
Mechanical ambient conditions (with PCU)	**Operation**	**Transport** (in transport packaging)	
Vibratory load	10 -58 Hz: 0.075 mm 58 – 200 Hz: 9.8 m/s^2 3M4 per EN 60721-3-3	5 -9 Hz: 3.5 mm 9 – 200 Hz: 9.8 m/s^2 2M2 per EN 60721-3-2	
Shock stressing	50 m/s^2, 30 ms, 18 shocks 3M2 per EN 60721-3-3	300 m/s^2, 6 ms, 18 shocks 2M2 to EN 60721-3-2	
Climatic ambient conditions			
Cooling	By natural convection		
Condensation, spraying water and icing	Not permitted		
Supply air	Without caustic gases, dusts and oils		
	Operation	**Storage/shipping** (in transport packaging)	
Applicable standards	EN 60721-3-3	EN 60721-3-1 / -3-2	
Climate class	3K5	1K3 / 2K4	
Temperature limits	0 ... 45 ºC (at front) 0 ... 55 ºC (at rear)	-20 ... 60ºC	
Temperature change	Max. 10 K/h	Max. 18 K/h	
Limits for relative humidity	5 ... 80%	5 ... 95%	
Permissible change in the relative air humidity	max. 1% /min		

Display	
Size / resolution	12.1 " TFT / 800 x 600 pixels
MTBF backlight	typ. 50 000 h at 25 ºC (dependent on the temperature)

*) Plus 10 mm clearance

8.6 Replacement parts

8.6.1 Overview

The figure shows the Touch Panel TP 012 broken down into its individual parts.

The components provided with an order number are available as individual spare parts.

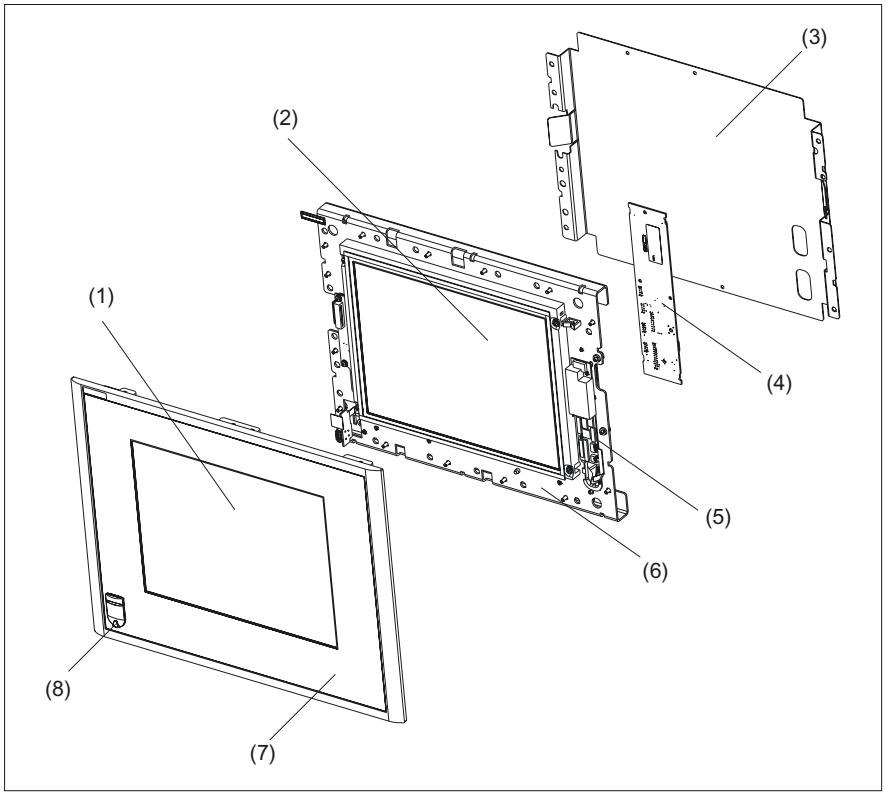

Figure 8-6 Individual components of the TP 012 Touch Panel

(1)	Touch Screen		
(2)	Display		
(3)	Casing		
(4)	Keyboard controller		
(5)	Backlight inverter for backlight		
(6)	Display support		
	Spare parts	**Order No.:**	**Note**
(7)	Operator panel front with Touch Screen	6FC5248-0AF16-0AA0	without LCD unit
(8)	Cap for the USB port	6FC5248-0AF05-0AA0	Set of 10
	Tension jacks	6FC5248-0AF06-0AA0	Set of 6

Note

A sealing cap for the USB connection is installed at the factory.

8.6.2 Replacement

CAUTION
Parts must only be replaced by trained personnel (danger of damage to sensitive components due to static electricity)!

USB cap / tension jack

The replacement of the USB sealing cap and tension jacks will not be described since it is simple and self-explanatory.

Operator panel front

When the operator panel front is replaced, the display, keyboard controller, touch controller, and USB port can continue to be used. They are therefore disassembled and re-assembled after the front panel has been replaced.

Note

We recommend that the keypad controller be re-used so that the control parameters that have been programmed-in are not lost.

Procedure

1. Put the TP 012 with the front side up on a flat, soft surface and loosen the 12 casing screws (see figure: “TP 012 rear side”, section: "Assembling a TP 012 and PCU").
2. Unplug the following connectors (see Fig. below):
   - from the keypad controller:

     Backlighting (base X14),
     IO USB cable K1,
     membrane connector (see note below)
   - the plug connection from the touch controller to the Touch Screen
3. Remove the screws from the display holder.
4. Lift off the display support with the display.
5. After bending back the two lugs, withdraw the USB interface
6. Install the components into the new operator panel front in reverse order.

Note

Descriptions of how to disconnect and connect the membrane connector can be found in section: "Connection Conditions", section: "Handling membrane connectors".

When tightening the screws, observe the torques (refer to the Section: "Technical specifications").

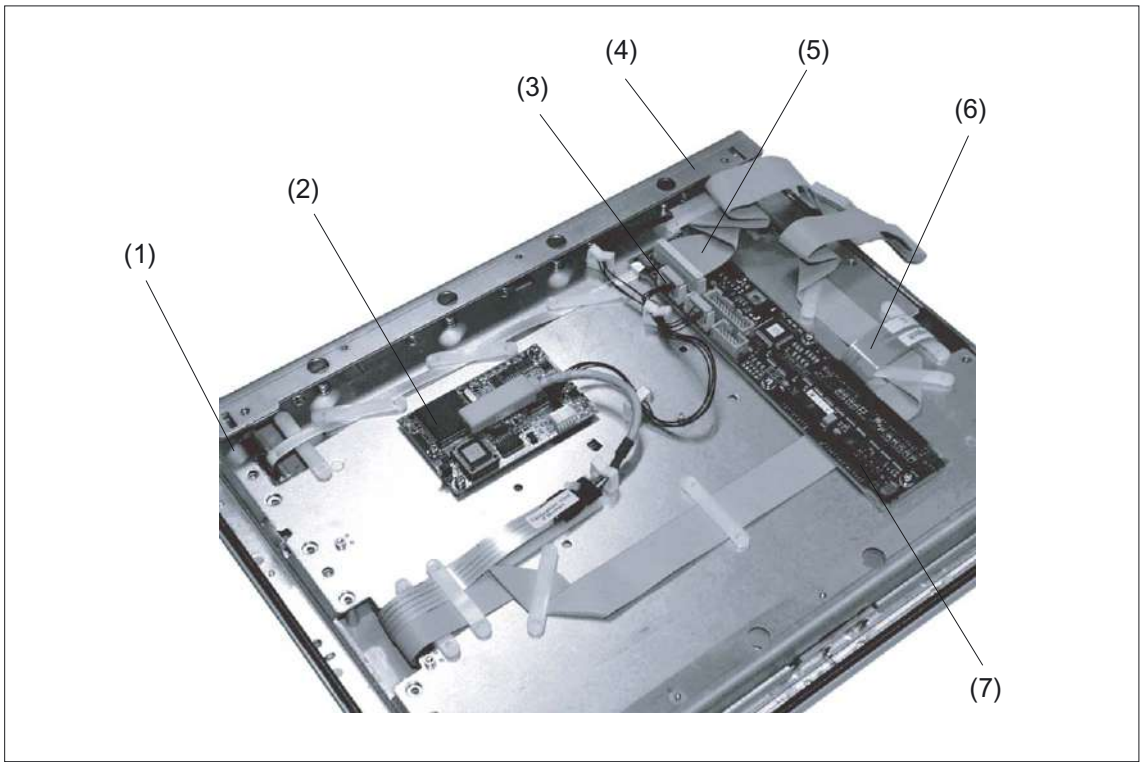

Figure 8-7 Replacing the TP012 operator panel front

(1) USB module
(2) Touch controller
(3) Socket X14 backlighting
(4) Display support
(5) I/O USB cable K1
(6) Membrane connector
(7) Keyboard controller

Operator panel front: OP 015

9

9.1 Description

The SINUMERIK OP 015 operator panel front and 15" TFT color display with a resolution of 1024 x 768 pixels (XGA) features 8 +4 horizontal and 8 vertical membrane softkeys.

The KB 483C full CNC keyboard can be used as an input keyboard.

Securing is done from the rear using special clamps that are included in the delivery kit.

Validity

The description below applies to the OP 015 operator panel front
(order number 6FC5203–0AF03–0AA0)

Features

- 19" mounting format, 7 HU (height units)
- Panel cutout (W x H): 450 x 290 mm
- Slight mounting depth
- 15" TFT flat screen (color) with resolution 1024 x 768 pixels
- Membrane keyboard:
  - 8 + 4 horizontal softkeys
  - 8 vertical softkeys
- Status LEDs for power supply and overtemperature
- Front USB interface
- Degree of protection: IP 65
- Attachment: tension jacks at the rear
- Can be combined with PCU, TCU, or Videolink receiver

9.2 Operator controls and indicators

9.2.1 View

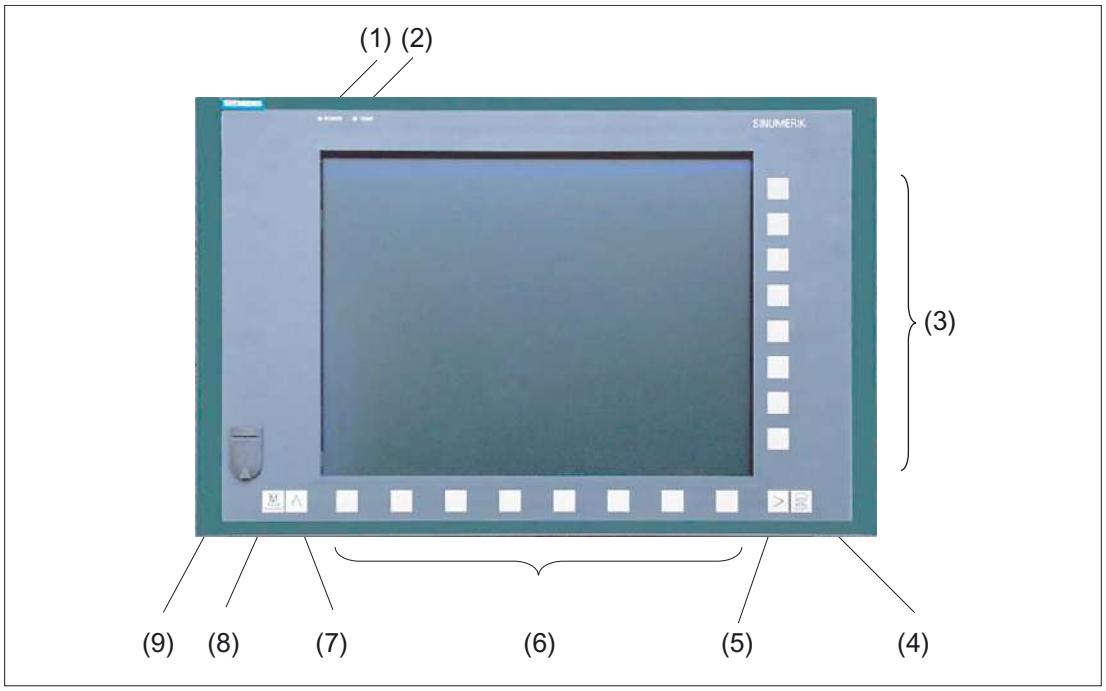

Figure 9-1 View of operator panel front OP 015

(1) Status LED: POWER
(2) Status LED: TEMP
(illuminated LEDs indicate increased wear)
(3) Softkeys
(4) Area switchover
(5) Etc. key
(6) Softkeys
(7) Recall
(8) Machine area
(9) Front USB interface

9.2.2 Keyboard and display

Keyboard

Several keys are arranged on the operator panel front:

- The eight vertical and horizontal softkeys call up functions that are available on screen via a menu bar.
- The etc. key allows for an expansion of the horizontal softkey bar in the same menu.
- The area switchover shows the main menu.
- The machine area key switches directly into the "Machine" operating area.
- The recall key jumps back to the superordinate menu. One window is closed.

The key symbols used on the operator panel front appear below along with the corresponding function keys on the PC keyboard.

Key	Function corresponds to PC key function	Key	Function corresponds to PC key function
	<Shift> F9		F9
	<Shift> F10		F10

Display

Note

Pixel error acc. to DIN EN ISO 13406-2 Class II.

9.2.3 Screen saver

If a screen with high contrast is displayed unchanged for longer than 1 hour, the screensaver must be activated (screen switched dark) to protect the TFT display from "burn-in" of the last displayed screen.

For more information see:

/BEM/: HMI Embedded Operator's Guide

/IAM/: IM2 Installation and Start-up HMI Embedded; IM4 Installation and Start-up HMI Advanced

CAUTION
You may do irreversible damage to your TFT display if the screen saver is not activated.

9.3 Interfaces

This operator panel front has the following interfaces:

Front side

USB 1.1 to connect an external keyboard or mouse (see Fig: "Front view of operator panel front" in section: "Control and display elements" --> "View")

Note

Note that the electromagnetic compatibility of commercially available peripheral devices operated via the USB port is usually rated for office use only.

For industrial use, components with a higher degree of certification are recommended.

Rear side

- Two ribbon cables for connecting the PCU (see figure below):
  - I/O–USB cable K1 (ribbon cable):
    All signals that are used for the display interface and the connection of operator panel fronts (e.g. supply voltages)
  - Display cable K2

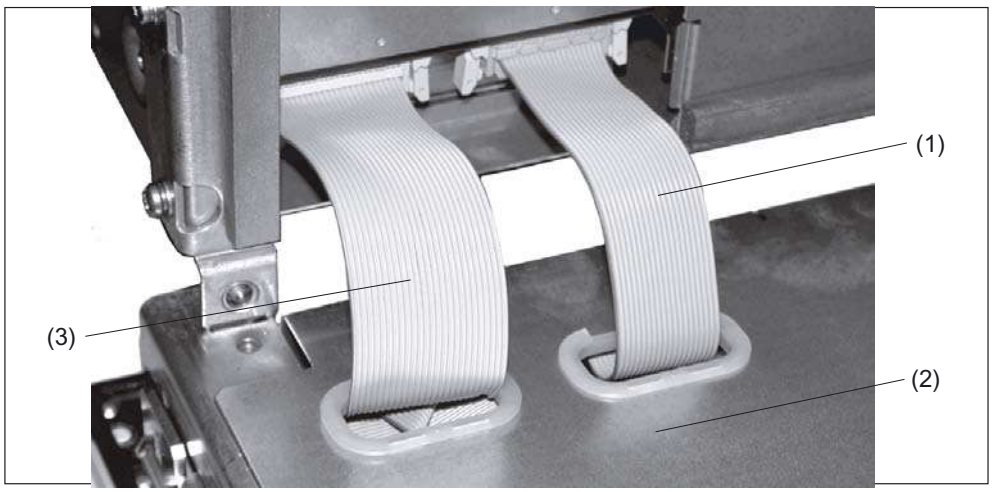

Figure 9-2 Connections on rear side of housing Connections to the PCU

(1) Display cable K2
(2) Back of operator panel
(3) I/O USB cable K1

Pin assignment

More details in section: "Connection Conditions," section: "Secondary electrical conditions."

9.4 Mounting

9.4.1 Preparation for mounting

Table 9-1 Dimensions of the mounting hole (see diagram below)

Used PCU type	Width (mm)	Height (mm)	Depth + clearance (mm)
PCU 20	450	290	98 + 10
PCU 50			130.2 + 10
PCU 70			171.2 + 10

Thanks to the tension jacks on the OP 015, drill-holes or screw holes are not needed.

This retaining method also affords a degree of protection IP65 (but only in conjunction with a circumferential seal and when the protective USB cap is fitted).

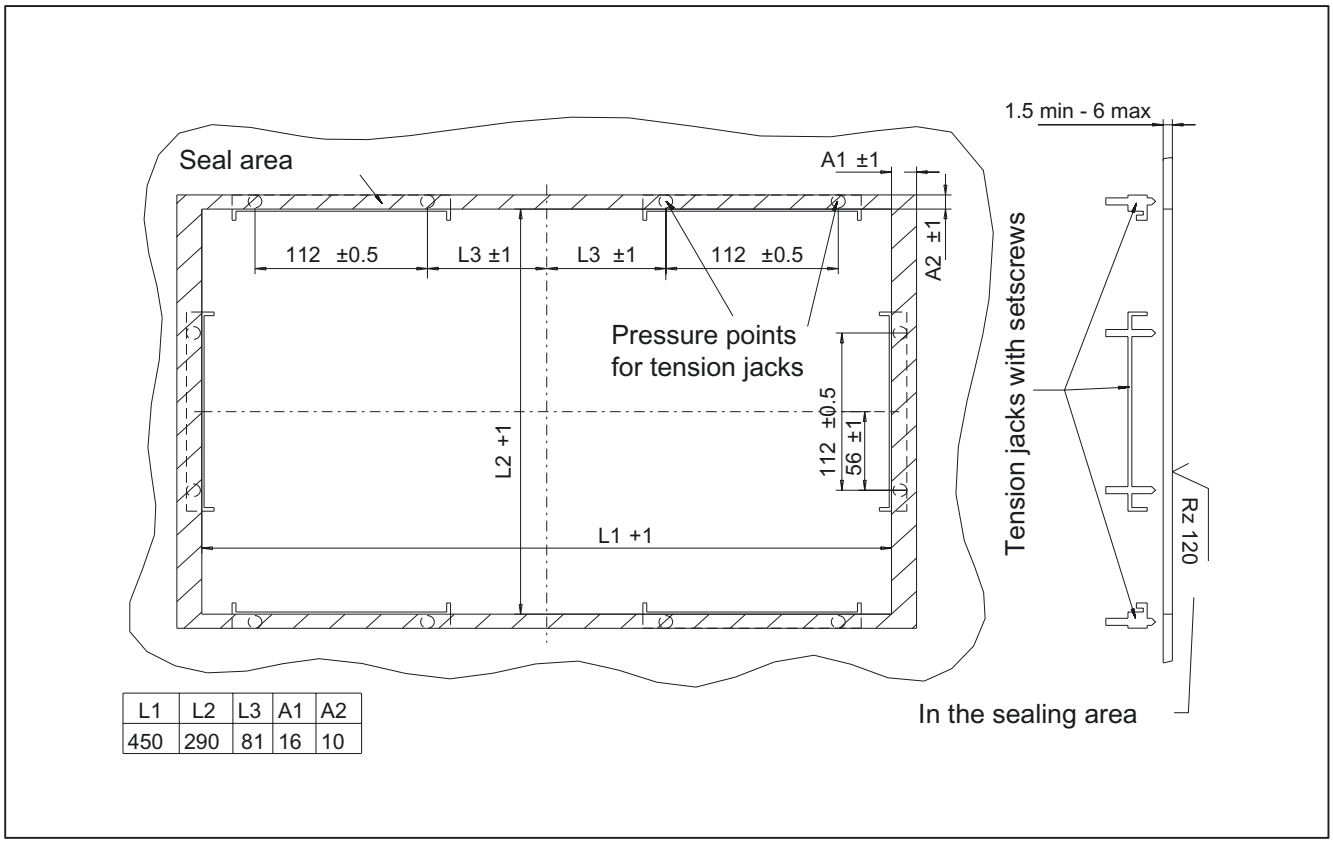

Figure 9-3 Dimension sheet for installing the OP 015 operator panel front

9.4.2 Assembling an OP 015 and a PCU

When combining an OP 015 and PCU, it is advisable to assemble them prior to installation in an assembly panel.

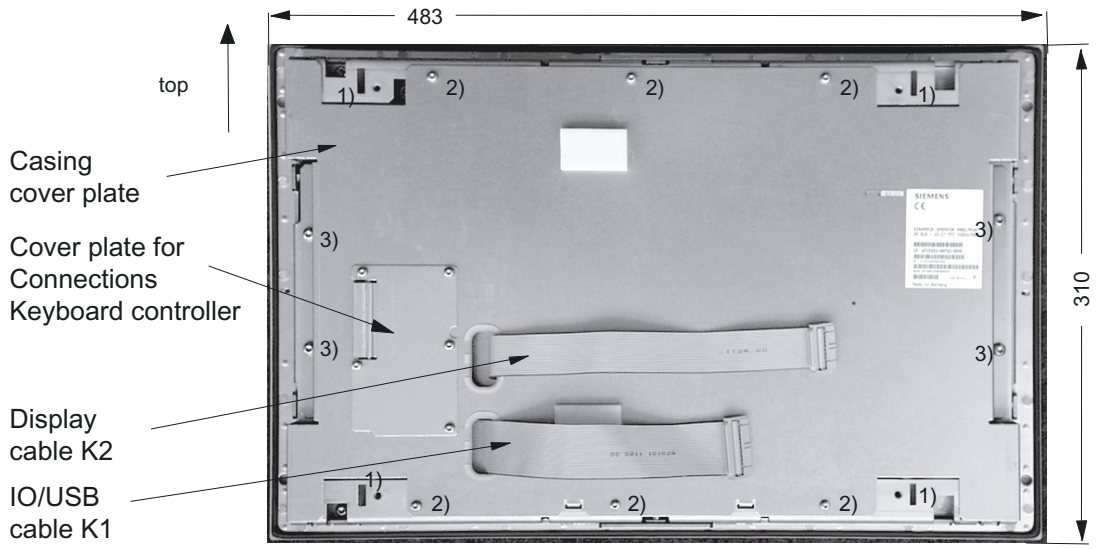

1) Mounting slots for PCU lugs
2) Casing screws M3
3) Casing screws M4

Figure 9-4 Rear side of operator panel front with position of interfaces and mounting slots

Procedure

To do this, proceed as described in section: “OP 012,” section: "Assembling OP 012 and PCU."

9.4.3 Mounting on the mounting wall

The clearance at the rear of the PCU must be at least 10 mm to ensure sufficient ventilation (see following Figure).

For more detailed information, please refer to the relevant PCU sections and section: "Heat dissipation."

NOTICE
Permitted mounting position: deviating by up to 5º from the vertical. This value can be further restricted by installed components (PCU, video link receiver, ...).

Procedure

1. Insert the assembled components (operator panel front and PCU) from the front into the panel cutout (see Figure:. "Dimension sheet for installing the operator panel front", section: "Preparation for mounting").
2. Secure the operator panel front in the panel cutout from the rear using the six tension jacks by tightening the setscrews (torque 0.4 - 0.5 Nm).

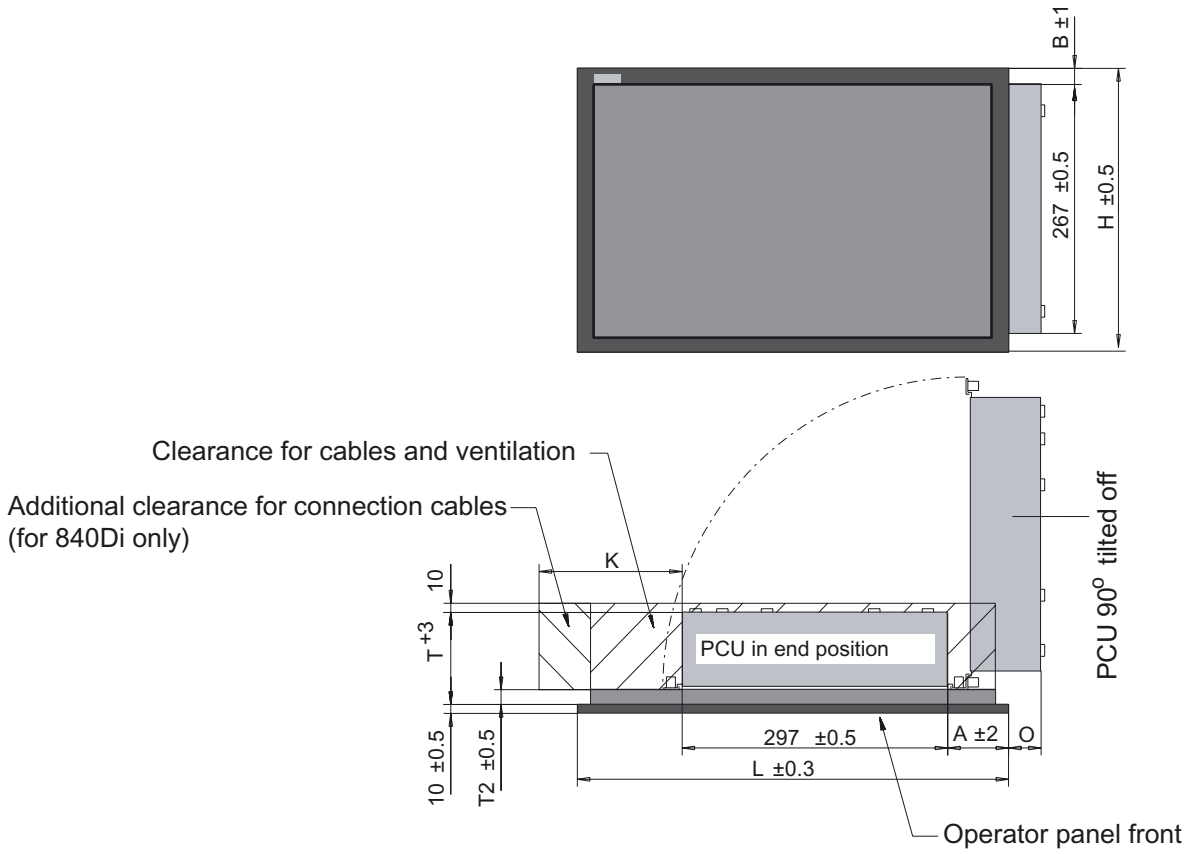

L	H	T	T2	A	B	O	K
483	310	130	42	87	23	22	220
All dimensions without the screws protruding							

Figure 9-5 Attaching the PCU to the OP015 operator panel front

9.5 Technical specifications

Safety			
Safety class	III; PELV acc. to EN 50178		
Degree of protection per EN 60529	Front side IP65	Rear side IP 00	
Approvals	CE / cULus		
Electrical specifications			
Power supply (via I/O USB cable and display cable)	Display	Backlight inverter	Logic / USB (with / without load)
Voltage Current (typ./max. mA; approx.)	5 V +/- 5% 420 / 600	12 V +/- 10% 900 / 1050	5.2 V +/- 2% 350 / 1000
Power consumption	Typical, approx. 15 W	Maximum approx. 24 W	
Mechanical data			
Dimensions	Width: 483 mm Height: 310 mm Depth: 52 mm	Mounting depth: 42 mm incl. PCU 20: 98 mm *) incl. PCU 50: 130.2 mm *) incl. PCU 70: 171.2 mm *)	
Weight	Approx. 7 kg		
Tightening torques, max.	Tension jack screws: 0.5 Nm	M3 screws: 0.8 Nm	M4 screws: 1.8 Nm
Mechanical ambient conditions (with PCU)	**Operation**	**Transport** (in transport packaging)	
Vibratory load	10 -58 Hz: 0.075 mm 58 – 200 Hz: 9.8 m/s^2 3M4 per EN 60721-3-3	5 -9 Hz: 3.5 mm 9 – 200 Hz: 9.8 m/s^2 2M2 per EN 60721-3-2	
Shock stressing	50 m/s^2, 30 ms, 18 shocks 3M2 per EN 60721-3-3	300 m/s^2, 6 ms, 18 shocks 2M2 to EN 60721-3-2	
Climatic ambient conditions			
Cooling	By natural convection		
Condensation, spraying water and icing	Not permitted		
Supply air	Without caustic gases, dusts and oils		
	Operation	**Storage/shipping** (in transport packaging)	
Applicable standards	EN 60721-3-3	EN 60721-3-1 / -3-2	
Climate class	3K5	1K3 / 2K4	
Temperature limits	0 ... 45 ºC (at front) 0 ... 55 ºC (at rear)	-20 ... 60ºC	
Temperature change	Max. 10 K/h	Max. 18 K/h	
Limits for relative humidity	5 ... 80% at 25°C	5 ... 95% at 25°C	
Permissible change in the relative air humidity	max. 0.1% /min		

Display	
Size / resolution	15 " TFT / 1024 x 768 pixels
MTBF backlight	typ. 40,000 h at 25 ºC (dependent on the temperature)

*) Plus 10 mm clearance

9.6 Replacement parts

9.6.1 Overview

The diagram shows the OP 015 operator panel front dismantled into its individual parts.

The components provided with an order number are available as individual spare parts.

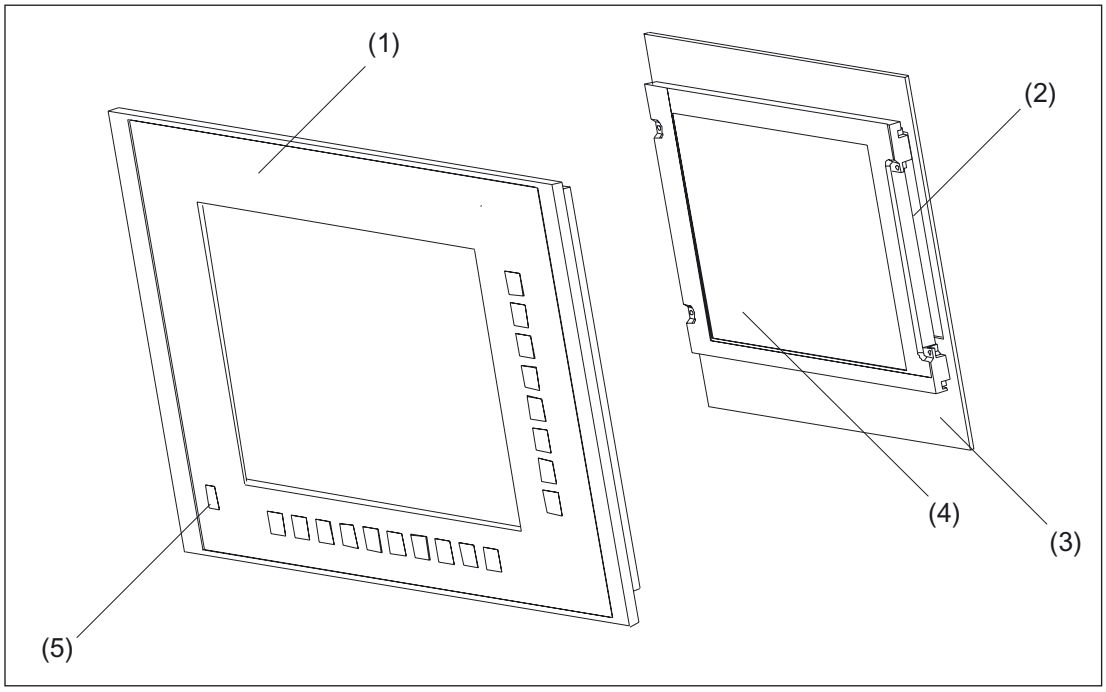

Figure 9-6 Individual parts for the OP 015 operator panel front

	Spare parts	Order number	Remarks
(1)	Operator panel front	6FC5248-0AF03-0AA0	Without LCD unit, USB port and keyboard controller
(2)	Backlight with backlight inverter		
(3)	Display support with keyboard controller (rear side)		
(4)	LCD unit		
	Spare parts	**Order number**	**Remarks**
(5)	Cap for the USB port	6FC5248-0AF05-0AA0	Set of 10
	Tension jacks	6FC5248-0AF05-0AA0	Set of 6

9.6.2 Replacement

CAUTION
Parts must only be replaced by trained personnel (danger of damage to sensitive components due to static electricity)!

USB cap / tension jack

The replacement of the USB sealing cap and tension jacks will not be described since it is simple and self-explanatory.

Operator panel front

When changing the operator panel front, the existing USB interface and the display support (with display, backlight inverter and keyboard controller) can be reused. They are therefore disassembled and re-assembled after the appropriate component has been replaced.

Note

We recommend that the keypad controller is re-used so that the control parameters that have been programmed-in are not lost.

Procedure

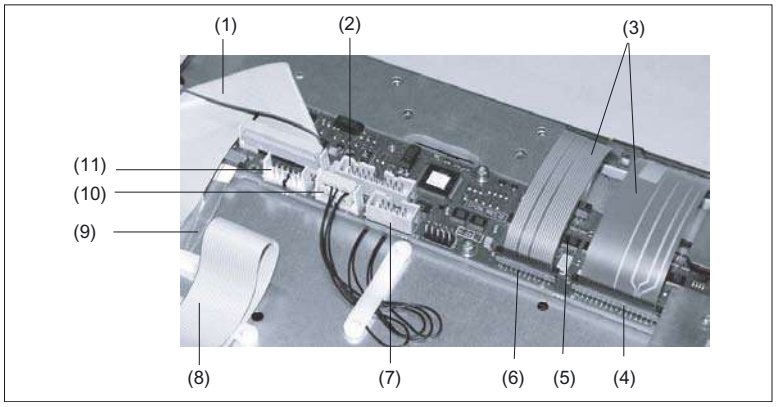

Figure 9-7 Keyboard controller

(1) I/O USB cable K1
(2) Connection X11 (reserved)
(3) Membrane lines from the operator panel front keyboard
Connections for the operator panel front keyboard
(4) X7
(5) X8
(6) X10
(7) Connection X12 (reserved)
(8) Display cable K2
(9) USB membrane line
(10) Connection X14 for display and backlight
(11) Connection X4 (reserved)

1. Put the OP 015 and the replacement operator panel front face down on a flat, soft surface.
2. Loosen the casing screws (see Figure: "Rear side of operator panel front with position of interfaces and mounting slots", section: "Assembling OP 015 and PCU 50") and remove the casing cover plate.

   The display support with the keyboard controller (Fig. above) will be visible underneath and, in a cutout of the mounting plate, the rear side of the USB interface (Fig. below).
3. Disconnect the membrane connectors of the operator panel front keyboard from sockets X7, X8 and X10 (see note below for procedure).
4. Disconnect the membrane connection of the USB connection cable (Fig. below; see note below for procedure).
5. Remove the screws of the display support and lift it off.
6. Pull the USB interface off its seat and insert it into the replacement operator panel front.
7. Place the display support on the replacement operator panel front.
8. Assemble the operator panel front in reverse order.

Note

Descriptions of how to disconnect and connect the membrane connector can be found in section: "Connection Conditions," section: "Handling membrane connectors."

When tightening the screws, observe the torques (refer to the Section: "Technical data").

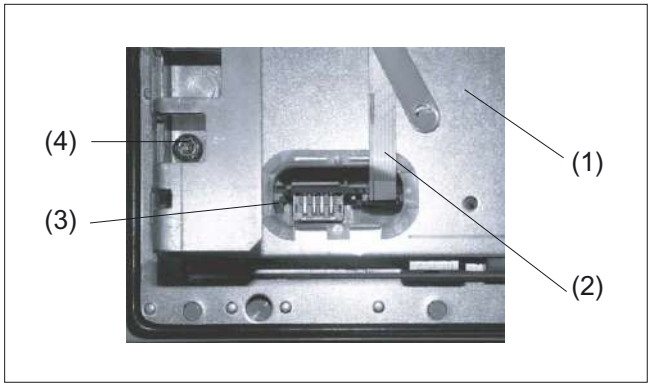

Figure 9-8 USB interface viewed from the operator panel rear side

(1) Display support
(2) USB membrane line (see Fig above)
(3) USB port
(4) Fastening screw M4

Operator panel front: OP 015A

10

10.1 Description

The SINUMERIK OP 015A operator panel front and 15" TFT color display with a resolution of 1024 x 768 pixels (XGA) features a 62-key membrane keyboard with 2 x (8 + 2) horizontal and 2 x 8 vertical softkeys and an integral mouse. The 2 x 8 vertical softkeys can be used as direct keys.

The operator panel front is secured from the rear using special clamps supplied with the panel.

Validity

The description below applies to the OP 015A operator panel front
(order number 6FC5203–0AF05–0AB0)

Features

- 19" mounting format, 8 HU (height units)
- Panel cutout (W x H): 450 x 335 mm
- Slight mounting depth
- 15" TFT flat screen (color) with resolution 1024 x 768 pixels
- Membrane keyboard with alphabetic, numeric, cursor, and control keypad
- Soft keys/direct keys:
  - 2 x (8 + 2) horizontal rows of keys with softkey function
  - 2 x 8 vertical rows of keys with softkey and direct control key functions
  - Direct control keys via direct control key module (optional), PP031 MC or directly connectable to the I/Os
- Shift key for switchover to the second key level (not for switching over the letters, since they are uppercase only)
- Integrated mouse
- Status LEDs for power supply and overtemperature
- USB front interface (USB 1.1)
- Degree of protection IP65 (front side)
- Attachment: tension jacks at the rear
- Can be combined with PCU, TCU, or Videolink receiver

10.2 Operator controls and indicators

10.2.1 View

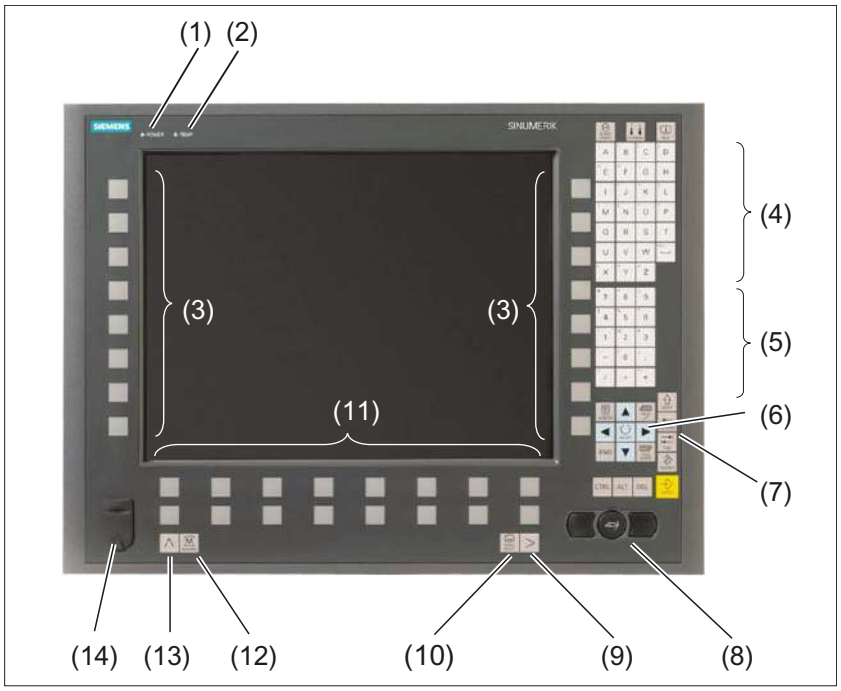

Figure 10-1 Front view of the OP 015A operator panel front

(1) Status LED: POWER
(2) Status LED: TEMP
(illuminated LEDs indicate increased wear)
(3) Softkeys and direct keys
(4) Alphabetic key group
(5) Numeric key group
(6) Cursor key group
(7) Control key group
(8) Mouse
(9) Etc. key
(10) Area switchover
(11) Softkeys
(12) Machine area
(13) Recall
(14) Front USB interface

10.2.2 Keyboard and display

Keyboard

Several keys and key pads are installed on the operator panel front:

- The alphabetic key group contains the letters A - Z and the space character for entering text.
- The numeric key group contains the digits 0 – 9, the "–", "+", "=" characters, the slash "/", and the decimal point for entering numeric characters and operators.
- The cursor key group is used to navigate on the screen.
- The control key group includes special functions.
- The mouse comprises the actuation field (corresponds to the function of a tracker ball) and two mouse keys for navigation.
- The area switchover shows the area menu.
- The etc. key allows for an expansion of the horizontal softkey bar in the same menu.
- The softkeys call up functions that are available on screen via a menu bar.
- The machine area key switches directly into the "Machine" operating area.
- The recall key jumps back to the superordinate menu. One window is closed.

The key symbols used on the operator panel front appear below along with the corresponding function keys on the PC keyboard.

Key	Function corresponds to PC key function	Key	Function corresponds to PC key function
ALARM CANCEL	Esc	END	End
1...n CHANNEL	F11	BACKSPACE	Backspace
HELP	F12	TAB	Tab
␣	Space	SHIFT	(only intended for internal keyboard changeover)
NEXT WINDOW	Home	CTRL	Ctrl key
PAGE UP	Page up	ALT	Alt key
PAGE DOWN	Page down	DEL	Delete
▲	Cursor up	INSERT	Insert
◀	Cursor left	INPUT	Enter
▶	Cursor right	⋀	F9

Key	Function corresponds to PC key function	Key	Function corresponds to PC key function
▼	Cursor down	MENU SELECT	F10
○ SELECT	5 (in numeric key group)	A, ..., Z	<Shift> A, ..., Z
>	<Shift> F9	M MACHINE	<Shift> F10

You will find information about softkeys in

- \BAD\ Operator's Guide HMI Advanced
- \BEM\ Operator's Guide HMI Embedded

Display

Note

Pixel error acc. to DIN EN ISO 13406-2 Class II.

10.2.3 Screen saver

If a screen with high contrast is displayed unchanged for longer than 1 hour, the screensaver must be activated (screen switched dark) to protect the TFT display from "burn-in" of the last displayed screen.

For more information see:

/BEM/: HMI Embedded Operator's Guide

/IAM/: IM2 Installation and Start-up HMI Embedded; IM4 Installation and Start-up HMI Advanced

CAUTION
You may do irreversible damage to your TFT display if the screen saver is not activated.

10.3 Interfaces

The OP 015 operator panel front has the following interfaces:

Front

USB 1.1 to connect an external keyboard or mouse (see figure in section: "Control and display elements" --> "View")

Note

Note that the electromagnetic compatibility of commercially available peripheral devices operated via the USB port is usually rated for office use only.

For industrial use, components with a higher degree of certification are recommended.

Rear side

- Two cables for connecting the PCU (see figure below):
  - I/O USB cable K1 (ribbon cable):
    All signals that are used for the display interface and the connection of operator panel fronts (e.g. supply voltages)
  - Display cable K2

Under the cover interface cover:

- Direct control key interface X11: Signals from the 16 "vertical softkey" direct control keys
- Interface X12 (reserved)

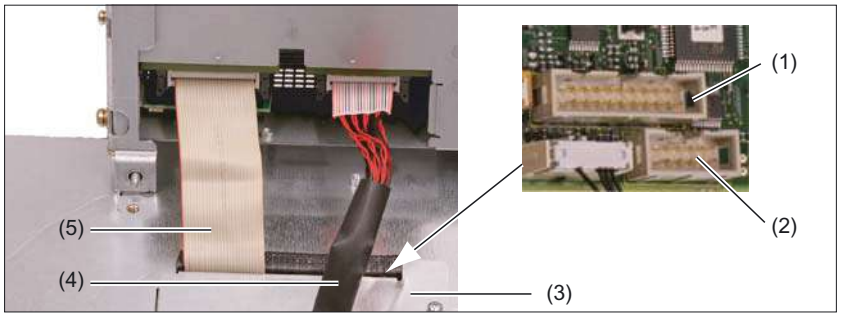

Figure 10-2 OP015A - Connections on rear side of housing: Connections to the PCU

(1) Direct control key interface X11
(2) Interface X12 (reserved)
(3) Interface cover
(4) Display cable K2
(5) I/O USB cable K1

Pin assignment and assignment of keys

Information on this can be found in chapter: "Direct control key module".

10.4 Mounting

10.4.1 Preparation for mounting

Table 10-1 Dimensions of the mounting hole (see figure)

Used PCU type	Width (mm)	Height (mm)	Depth + clearance (mm) measured from the mounting wall surface
PCU 50	450	335	127 + 10
PCU 70			167 + 10

Thanks to the tension jacks on the OP 015A, drill-holes or screw holes are not needed.

This retaining method also affords a degree of protection IP65 (but only in conjunction with a circumferential seal and when the protective USB cap is fitted).

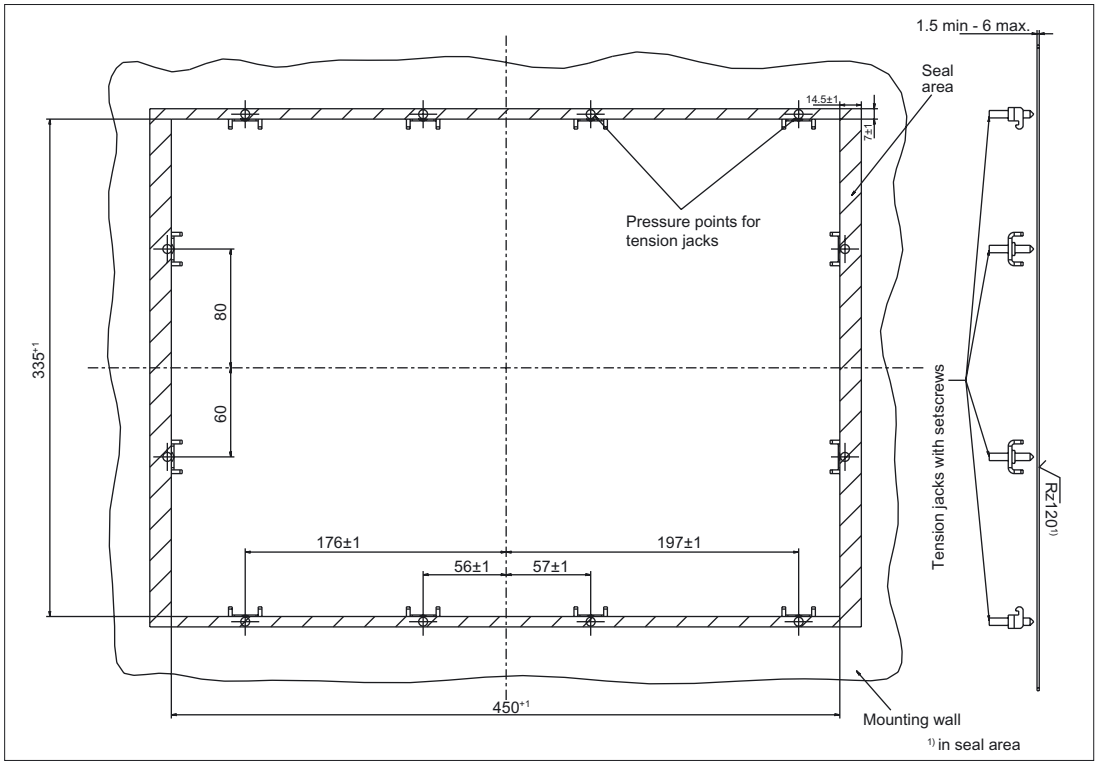

Figure 10-3 Dimension sheet for installing the OP 015A operator panel front

10.4.2 Assembling an OP 015A and a PCU

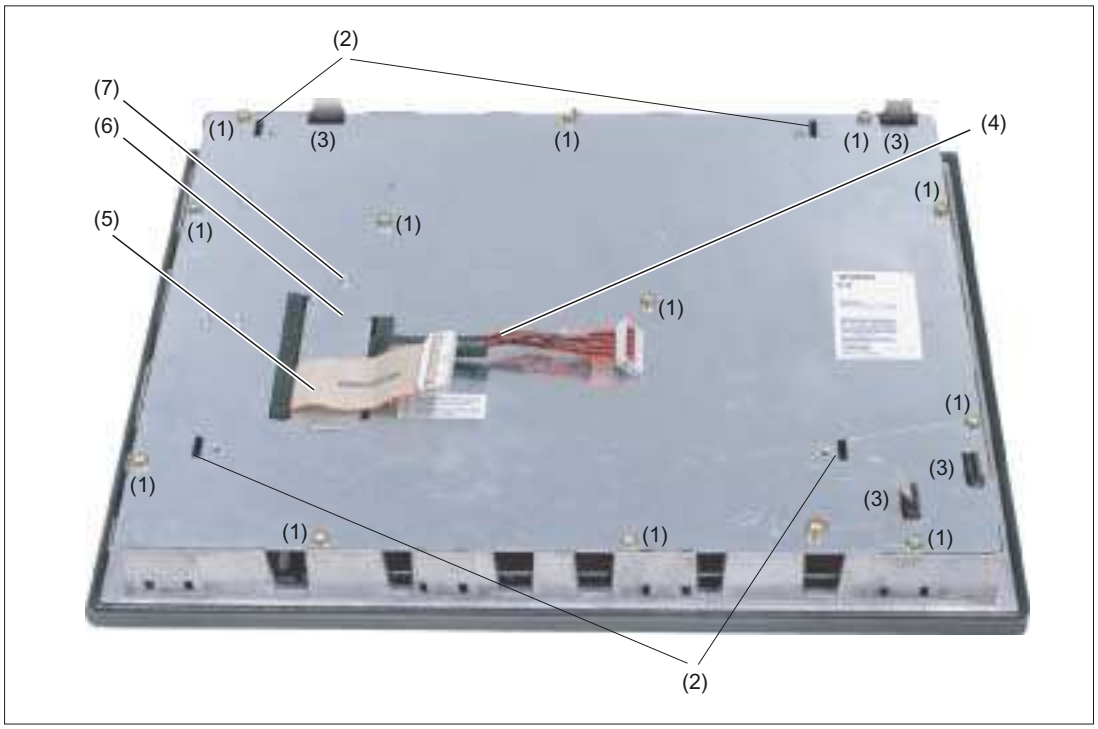

Figure 10-4 OP 015A rear side

(1) Casing screws (1x concealed under cable K1)
(2) Mounting slots for PCU lugs
(3) Slit for inserting softkey labeling strips
(4) Display cable (K2)
(5) I/O / USB cable (K1)
(6) Cover plate for keyboard controller connections
(7) Retaining screw for the cover plate

If you want to combine the OP 015A with a PCU and possibly a direct control key module (see section: 'Direct control key module"), assemble the components before installing them on the mounting wall.

Procedure

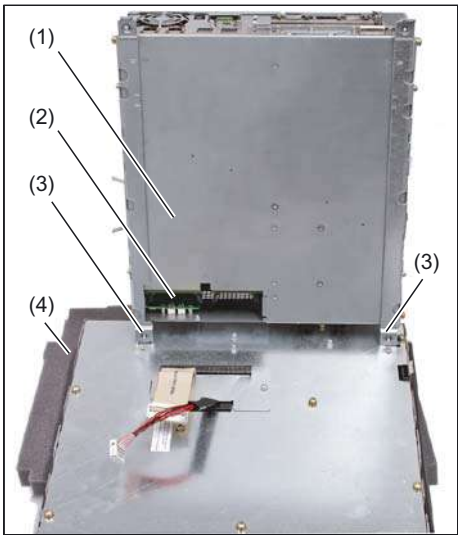

(1) PCU
(2) Interface cover of the PCU (cover plate removed)
(3) Mounting lugs
(4) Mounting support

1. Place the front end of the OP 015A on a soft, horizontal support (4) to avoid damaging the surface of the operator panel front.
2. Remove the interface cover (2) of the PCU.
3. Position the PCU so that the mounting lugs (3) engage with the OP 015A.

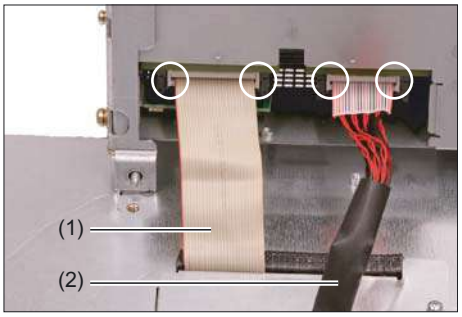

(1) I/O USB cable K1
(2) Display cable K2

4. Connect the cable connectors K1 and K2 to the interfaces of the PCU.
5. Make sure that you hear the connectors lock in and that the locks are closed (see marked rings)



6. Swing the PCU in the direction of the OP 015A, making sure that the cables are folded correctly.

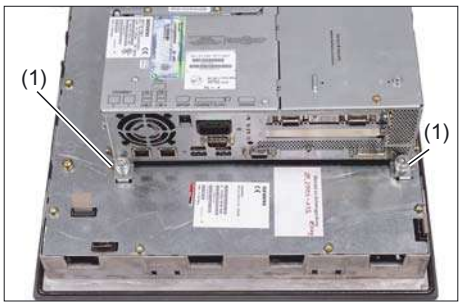

7. Secure the PCU with two knurled-head screws (1) at each end of the two mounting angles (torque: 1.8 Nm).
   To tighten the screws, use a torque screwdriver (e. g. FACOM A.302A, tightening torque, max.: 1.8 Nm).

10.4.3 Mounting on the mounting wall

The clearance at the rear of the PCU must be at least 10 mm to ensure sufficient ventilation.

For more detailed information, please refer to the relevant PCU sections and section: "Heat dissipation."

NOTICE
Permitted mounting position: deviating by up to 5º from the vertical. This value can be further restricted by insalled components (PCU, video link receiver, ...).

Procedure

1. Insert the assembled components (operator panel front and PCU) from the front into the panel cutout (see figure:. "Dimension sheet for installing the operator panel front", section: "Preparation for mounting").
2. Secure the operator panel front in the panel cutout from the rear using the twelve tension jacks by tightening the setscrews (torque 0.5 Nm).

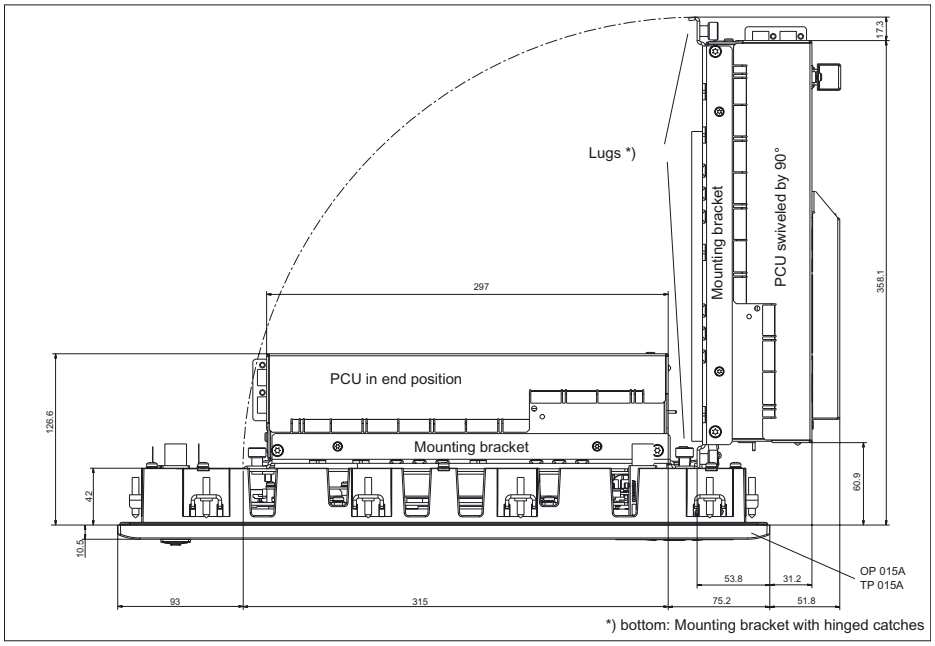

Figure 10-5 Attaching the PCU to the OP 015A operator panel front (viewed from above)

10.4.4 Softkey labeling

User-specific functions can be assigned to the two vertical softkey bars. Printed labeling strips can be used to label the softkeys.

Blank labels are already factory-installed.

DIN A4 films are available for preparing the vertical strips. You will find the order number in section: "Spare parts" → "Overview".

Note

Use the "Arial" font to format text. This font is comparable to the "Univers S57" font, used by Siemens for the key labeling.

Proceed as follows

1. Label the mat side of the film with a laser printer or another printer that allows "Film" to be set as a printable medium.
2. Cut the printed labels along the preprinted lines.
3. Insert the labeling strips into the slits provided from the rear of the operator panel front (refer to figure: "OP 015A Housing open" in section: "Spare parts" → "Replacement".

   Note

   In order to facilitate insertion of the "Part1" strip when the PCU is mounted, it is recommended that you
   - unscrew the 4 retaining screws of the PCU and
   - swing the PCU up.

   Once you have inserted the strip, swing the PCU back to the operator panel and secure by tightening the screws.

10.5 Technical specifications

Safety			
Safety class	III; PELV acc. to EN 50178		
Degree of protection per EN 60529	Front: IP 65	Rear side: IP00	
Approvals	CE / cULus		
Electrical data			
Power supply (via I/O USB cable and display cable)	Display	Backlight inverter	Logic / USB
Voltage Current (typ./max. mA; approx.)	4.9 V - 5.25 V 420 / 700	12 V +/- 5% 900 / 1100	5.0 V - 5.2 V 350 / 1050
Power consumption	Typical, approx. 15 W	Maximum approx. 25 W	
Mechanical data			
Dimensions	Width: 483 mm Height: 355 mm Depth: 53 mm	Mounting depth without PCU: 42 mm Mounting depth with PCU 50: 127 mm *) Mounting depth with PCU 70: 167 mm *) Mounting depth with TCU: 78 mm *)	
Weight	Approx. 8.4 kg		
Max. tightening torques:	Tension jack screws: 0.5 Nm	M3 screws: 0.8 Nm	M4 screws: 1.8 Nm
Mechanical ambient conditions (with PCU)	**Operation**	**Transport** (in transport packaging)	
Vibratory load	10 – 58 Hz: 0.074 mm 58 – 200 Hz: 1 g	5 – 9 Hz: 3.1 mm 9 – 200 Hz: 1 g	
Shock load	5 g, 30 ms, 18 shocks	30 g, 6 ms, 18 shocks	
Climatic environmental conditions			
Cooling	By natural convection		
Moisture condensation, water spray and the formation of ice	Not permissible		
Air inlet	without aggressive gases, dusts and oils		
	Operation	**Storage/shipping** (in transport packaging)	
Applicable standards	EN 60721-3-3	EN 60721-3-1 / -3-2	
Climate class	3K5	1K3 / 2K4	
Temperature limits	0 ... 45 ºC (at front) 0 ... 55 ºC (at rear)	-20 ... 60 ºC (cyclic)	
Temperature change	max. 10 K/h	max. 18 K/h	
Limits for relative humidity	5 ... 65% (annual mean) and max. 85% over max. 2 months/year	5 ... 95% at 25°C	
Permissible change in the relative air humidity	Max. 6%/h		

Display	
Size / resolution	15 " TFT / 1024 x 768 pixels
MTBF backlight	typ. 50 000 h at 25 ºC (dependent on the temperature)

*) measured from the (exterior) mounting wall surface; plus 10 mm clearance for cable and ventilation

10.6 Spare parts

10.6.1 Overview

The diagram shows the OP 015A operator panel front dismantled into its individual parts. The components provided with an order number are available as individual spare parts.

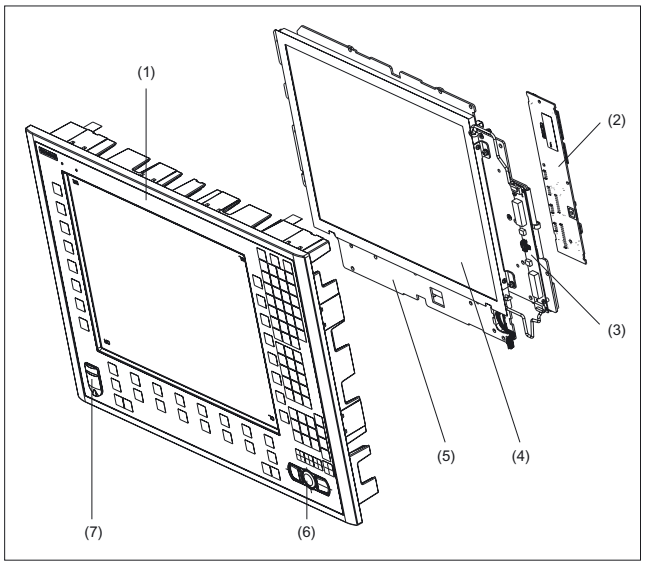

Figure 10-6 Individual parts for the OP 015A operator panel front

	Spare parts	Order number	Remarks
(1)	Operator panel front	6FC5248-0AF17-0AB0	Without LCD unit, mouse, USB port and keyboard controller
(2)	Keyboard controller		
(3)	Background lighting with backlight inverter		
	Spare parts	**Order number**	**Remarks**
	Direct control key module	6FC5247-0AF11-0AA0	
	Mounting kit for direct key module	6FC5247-0AF30-0AA0	
(4)	LCD unit		
(5)	Display support		
	Spare parts	**Order number**	**Remarks**
(6)	USB mouse	6FC5247-0AF01-0AA0	
(7)	Cap for the USB port	6FC5248-0AF05-0AA0	Set of 10
	Tension jacks	6FC5248-0AF06-0AA0	Set of 9
	Mounting bracket	6FC5248-0AF20_2AA0	
	Slide-in labels *) (DIN A4 films)	6FC5248-0AF24-0AA0	Set of 3

*) The dimensions for production of film slide-in labels for softkey labeling can be seen in the following diagram.

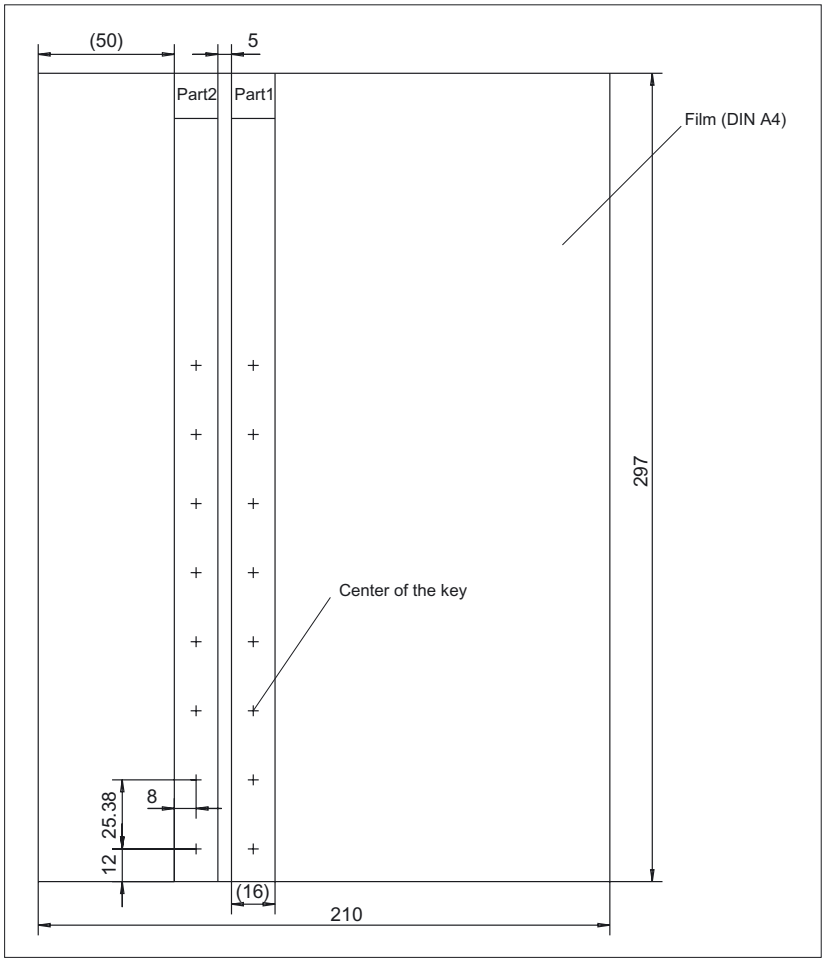

Figure 10-7 Dimensions for vertical slide-in labels

10.6.2 Replacement

CAUTION
Parts must only be replaced by trained personnel (danger of damage to sensitive components due to static electricity)!

USB cap / tension jack

The replacement of the USB sealing cap and tension jacks will not be described since it is simple and self-explanatory.

Operator panel front

When the operator panel front is replaced, the display, keyboard controller, mouse, and USB port can be used again. They are therefore disassembled and re-assembled after the front panel has been replaced.

Note

We recommend that the keypad controller be re-used so that the control parameters that have been programmed-in are not lost.

Dismounting individual parts from the operator panel front

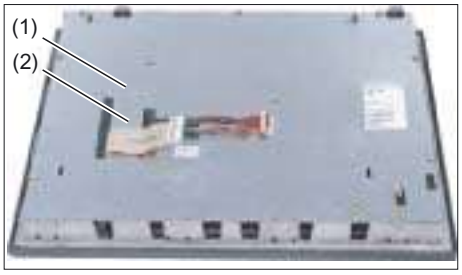

1. Place the OP 015A on a soft, horizontal support. Remove the retaining screw (1) from the cover plate (2) and lift off the cover plate.



2. Loosen the 13 casing screws (see also figure: "Rear side of OP 015A operator panel front" in section: "Mounting" → "Assembling OP 015A and PCU")
3. Lift off the cover.

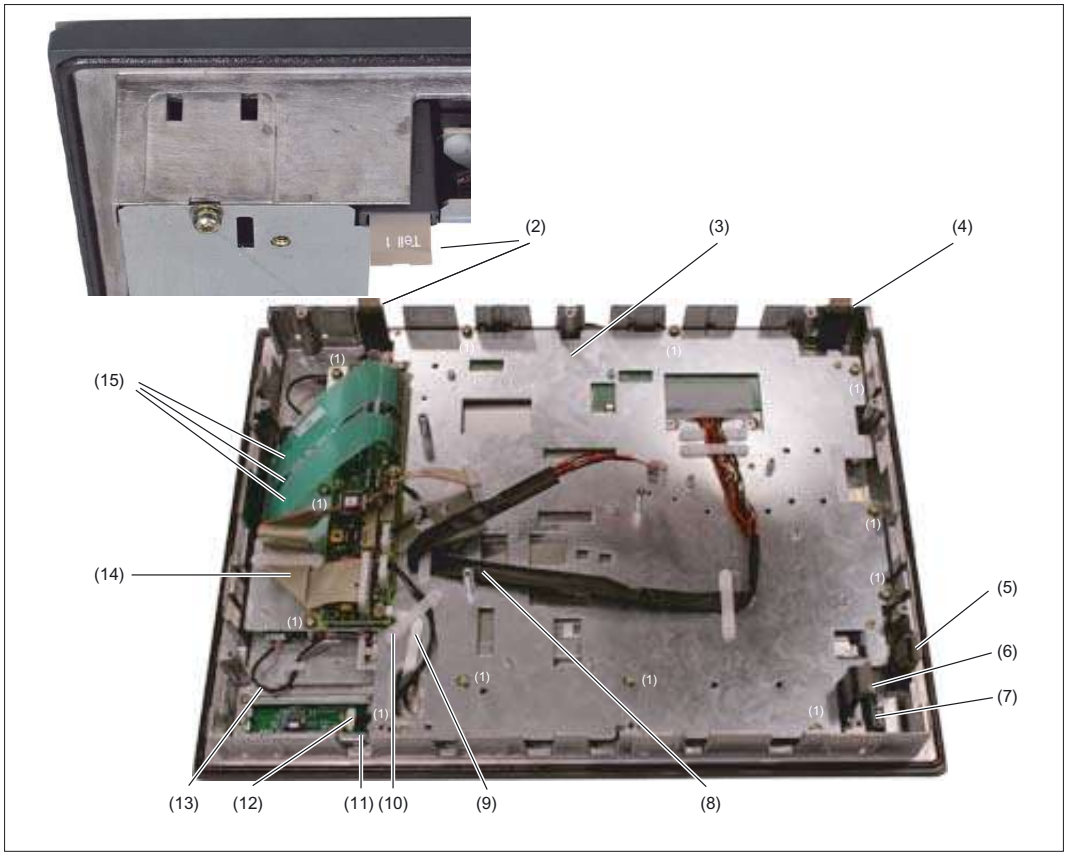

Figure 10-8 OP015A Housing open

(1) Screws (M4) for display support
(2) Slide-in strips (Part1)
(3) Display support
(4) Slide-in strips (Part2)
(5) Slide-in strips (Part3)
(6) Slide-in strips (Part4)
(7) USB interface
(8) Display cable
(9) Ribbon cable for keyboard controller / USB connection
(10) Retainer for the mouse / keyboard controller cable
(11) Port for the mouse
(12) Cable plug for mouse / keyboard controller
(13) Backlight inverter cable
(14) I/O USB cable
(15) Keyboard cable

Backlight inverter cable

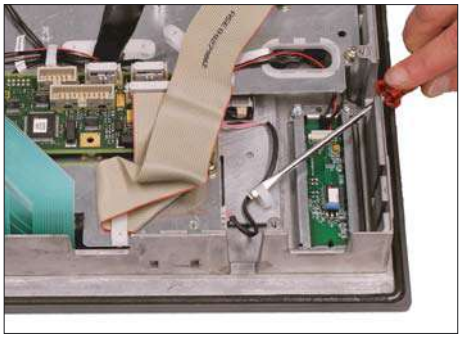

4. Remove the two cables to the backlight inverter (to the left and right of the display support) by raising the clips with a flat screwdriver and pulling out the cables.

Connection of keyboard controller / mouse

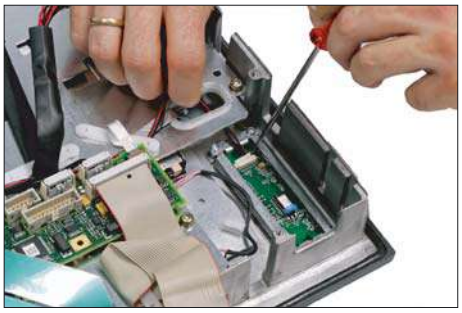

5. Disconnect the connection from the keyboard controller to the mouse by carefully pushing the plug back with a screwdriver.

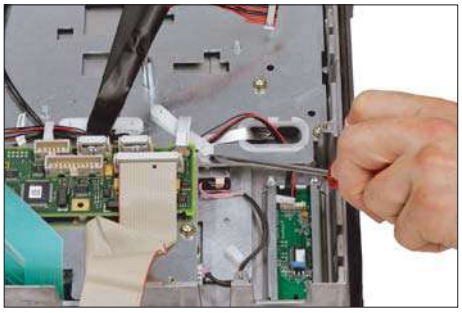

6. Remove the retainer for the cable from the keyboard controller to the mouse.

Connection of keyboard controller / USB port

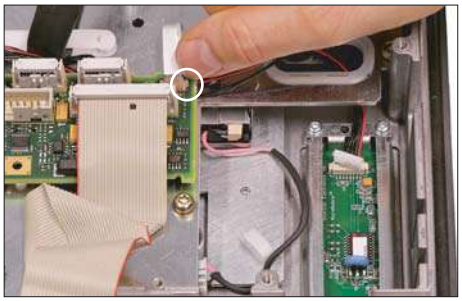

7. Disconnect the connection from the USB port to the keyboard controller by pulling back the terminal clamps to the left and right of the plug.

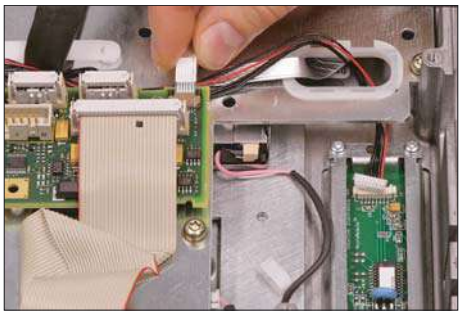

8. Remove the plug of the USB cable from the keyboard controller.

Keyboard cable

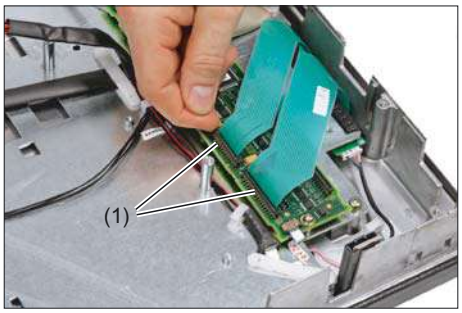

9. Disconnect the 3 keyboard cables by pushing up the terminal holders (1) on the keyboard controller and pulling the keyboard cables from the bracket.

   For detailed information about removal and insertion of membrane connectors, see also chapter: "Connection conditions" → "Handling membrane connectors".

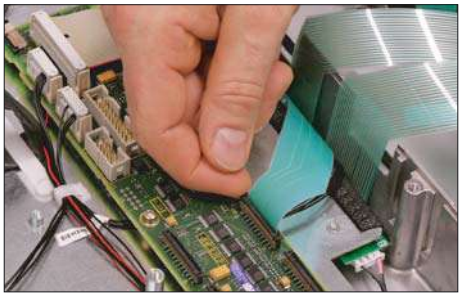

Display supports

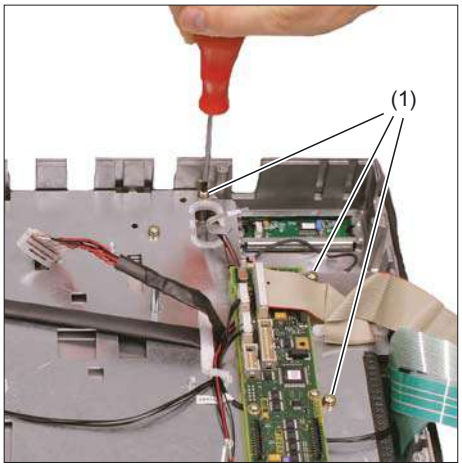

10. Remove the 12 screws (1) from the display support.
    For the arrangement of the screws on the display support, refer to figure: "OP 015A Housing open".

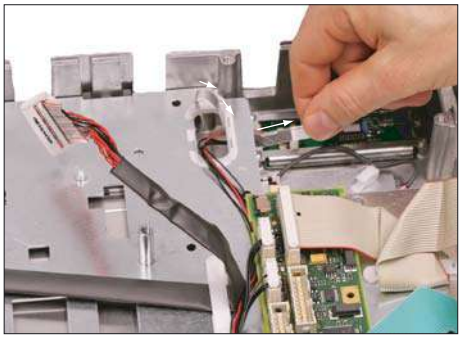

11. Insert the USB ribbon cable in the direction of the arrow through the opening and pull it out.
12. Lift off the display support.

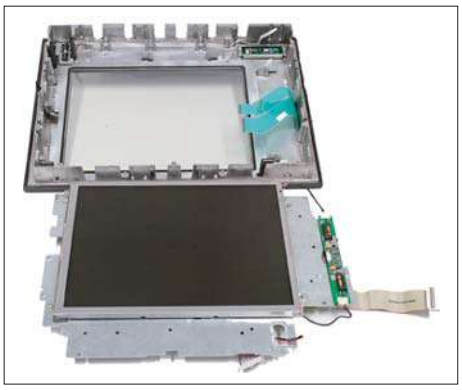

13. Place the display support on its back side to avoid damaging the display.

USB board



14. Remove the USB port by sliding up both retaining clamps and pulling out the board.

Mouse board

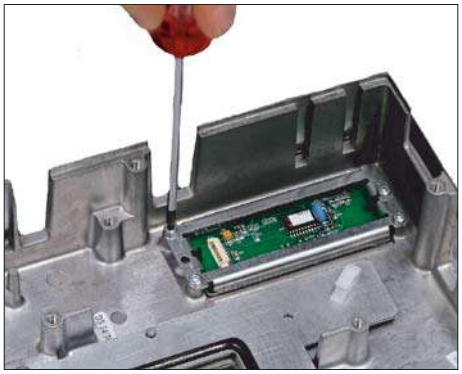

15. Loosen the 4 screws (M3) on the bracket for the mouse board. Lift off both the bracket and the mouse board.

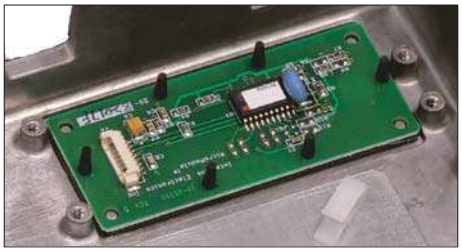

Installing the individual parts in the operator panel front

1. Remove the transportation safety precautions (adhesive strip for securing cables) and the screen protective sheeting from the inside.
2. Install the components in the new operator panel front in the order indicated:

15. Mouse board and bracket

14. USB board

Press the USB board into place until you hear it lock into the retaining clamps.

Check the secured position of the USB cable behind the guide pins (1).

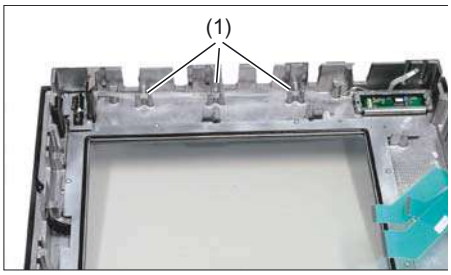

13. - 10. Display support

13. Bend the keyboard cables (1) back slightly before inserting the display support.
Otherwise, the keyboard cables could become squeezed or damaged, thus rendering them inoperable.

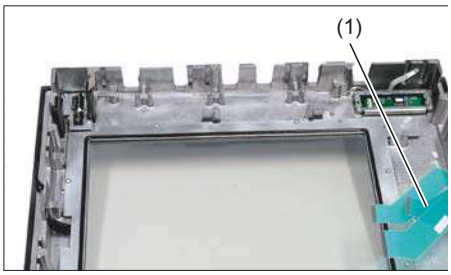

11. Insert the USB ribbon cable against the direction of the arrow through the opening and pull it out.

9. Keyboard cable

8. - 7. Connection of keyboard controller / USB port

8. Ensure that the contact side (1) of the USB plug faces up.

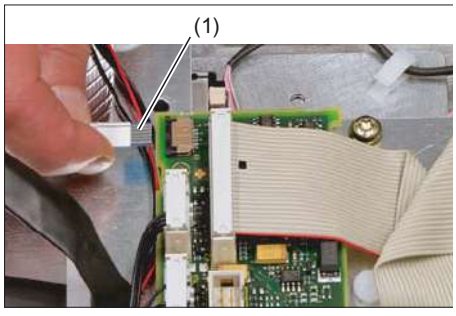

6. - 5. Connection of keyboard controller / mouse

4. Backlight inverter cable

3. - 1. Cover

Note

Pay attention to the torques when tightening the screws (see section: "Technical specifications").

Operator panel front: TP 015A

11

11.1 Description

The SINUMERIK TP 015A touch operator panel front and 15" TFT color display with a resolution of 1024 x 768 pixels (XGA) and touch screen features a 62-key membrane keyboard as well as 2 x (8 + 2) horizontal and 2 x 8 vertical softkeys and an integral mouse. The 2 x 8 vertical softkeys can be used as direct keys.

The operator panel front is secured from the rear using special clamps supplied with the panel.

Validity

The description below applies to the TP 015A operator panel front
(order number 6FC5203–0AF08–0AB0)

Features

- 15" TFT flat screen (color) with resolution 1024 x 768 pixels
- Touch screen (analog resistive, 5-wire)
- Membrane keyboard with alphabetic, numeric, cursor, and control keypad
- Soft keys/direct keys:
  - 2 x (8 + 2) horizontal rows of keys with softkey function
  - 2 x 8 vertical rows of keys with softkey and direct control key function
  - The direct control keys can be connected through the direct control key module (optional) or directly to the I/O peripherals
- Shift key for switchover to the second key level (not for switching over the letters, since they are uppercase only)
- Integrated mouse
- Status LEDs for power supply and overtemperature
- USB front interface (USB 1.1)
- Degree of protection IP65 (front side)
- Attachment: tension jacks at the rear
- Can be combined with PCU, TCU, or Videolink receiver

11.2 Operator controls and indicators

11.2.1 View

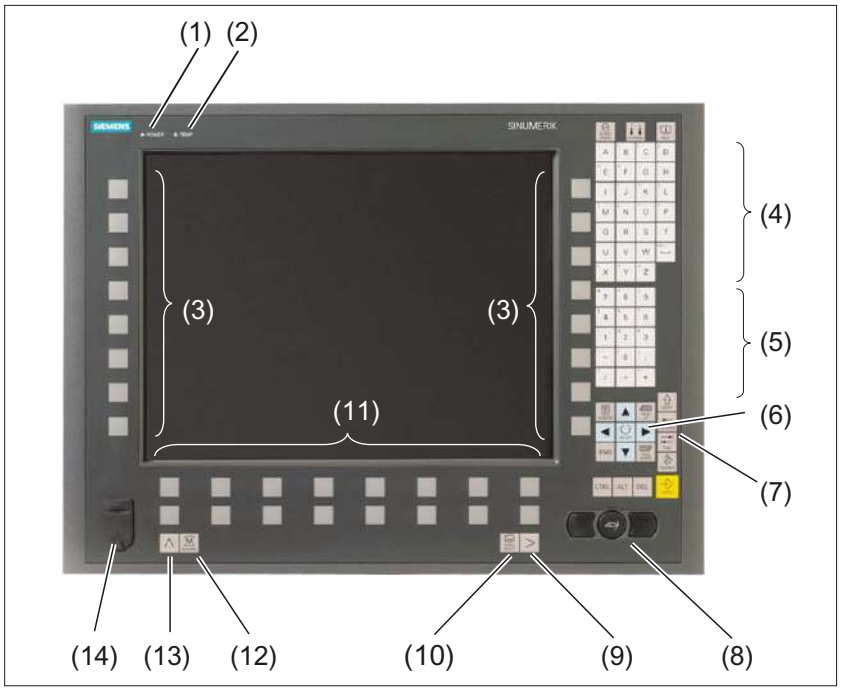

Figure 11-1 Front view, TP 015A operator panel front

(1) Status LED: POWER
(2) Status LED: TEMP
(illuminated LEDs indicate increased wear)
(3) Softkeys and direct keys
(4) Alphabetic key group
(5) Numeric key group
(6) Cursor key group
(7) Control key group
(8) Mouse
(9) Etc. key
(10) Area switchover
(11) Softkeys
(12) Machine area
(13) Recall
(14) Front USB interface

11.2.2 Operation

The operator panel front is operated by

- using the touch screen to select the application-specific functions, e.g. by touching one of the displayed buttons.
- Softkeys
- Keys
- Mouse

CAUTION
Do not touch the operating elements with pointed or hard objects. This may considerably reduce their service lives.

11.2.3 Keyboard and display

Keyboard

Several keys and key pads are installed on the operator panel front:

- The alphabetic key group contains the letters A - Z and the space character for entering text.
- The numeric key group contains the digits 0 – 9, the "–", "+", "=" characters, the slash "/", and the decimal point for entering numeric characters and operators.
- The cursor key group is used to navigate on the screen.
- The control key group includes special functions.
- The mouse comprises the actuation field (corresponds to the function of a tracker ball) and two mouse keys for navigation.
- The area switchover shows the area menu.
- The etc. key allows for an expansion of the horizontal softkey bar in the same menu.
- The softkeys call up functions that are available on screen via a menu bar.
- The machine area key switches directly into the "Machine" operating area.
- The recall key jumps back to the superordinate menu. One window is closed.

The key symbols used on the operator panel front appear below along with the corresponding function keys on the PC keyboard.

Key	Function corresponds to PC key function	Key	Function corresponds to PC key function
ALARM CANCEL	Esc	END	End
1...n CHANNEL	F11	BACKSPACE	Backspace
HELP	F12	TAB	Tab
␣	Space	SHIFT	(only intended for internal keyboard changeover)
NEXT WINDOW	Home	CTRL	Ctrl key
PAGE UP	Page up	ALT	Alt key
PAGE DOWN	Page down	DEL	Delete
▲	Cursor up	INSERT	Insert
◀	Cursor left	INPUT	Enter
▶	Cursor right	∧	F9
▼	Cursor down	MENU SELECT	F10
SELECT	5 (in numeric key group)	A, ..., Z	<Shift> A, ..., Z
>	<Shift> F9	M MACHINE	<Shift> F10

You will find information about softkeys in

- \BAD\ Operator's Guide HMI Advanced
- \BEM\ Operator's Guide HMI Embedded

Display

Note

Pixel error acc. to DIN EN ISO 13406-2 Class II.

11.2.4 Screen saver

If a screen with high contrast is displayed unchanged for longer than 1 hour, the screensaver must be activated (screen switched dark) to protect the TFT display from "burn-in" of the last displayed screen.

For more information see:

/BEM/: HMI Embedded Operator's Guide

/IAM/: IM2 Installation and Start-up HMI Embedded; IM4 Installation and Start-up HMI Advanced

CAUTION
You may do irreversible damage to your TFT display if the screen saver is not activated.

11.3 Interfaces

The TP 015A operator panel front has the following interfaces:

Front

USB 1.1 to connect an external keyboard or mouse (see figure in section: "Control and display elements" --> "View")

Note

Note that the electromagnetic compatibility of commercially available peripheral devices operated via the USB port is usually rated for office use only.

For industrial use, components with a higher degree of certification are recommended.

Rear side

- Two cables for connecting the PCU (see figure below):
  - I/O USB cable K1 (ribbon cable):

    All signals that are used for the display interface and the connection of operator panel fronts

    (e.g. supply voltages)
  - Display cable K2

Under the interface cover:

- Direct control key interface X11: Signals from the 16 "vertical softkey" direct control keys
- Interface X12 (reserved)

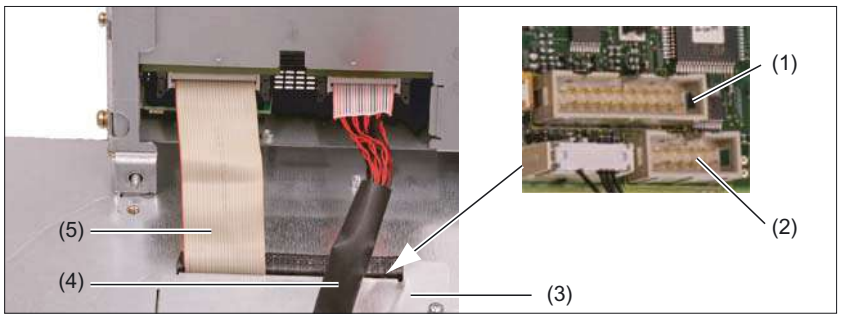

Figure 11-2 TP 015A - connections at the rear of the enclosure: Connections to the PCU

(1) Direct control key interface X11
(2) Interface X12 (reserved)
(3) Interface cover
(4) Display cable K2
(5) I/O USB cable K1

Pin assignment and assignment of keys

Information on this can be found in the section: "Direct control key module".

11.4 Mounting

11.4.1 Preparation for mounting

Table 11-1 Dimensions of the mounting hole (see figure)

Used PCU type	Width (mm)	Height (mm)	Depth + clearance (mm) measured from the mounting panel surface
PCU 50	450	335	127 + 10
PCU 70			167 + 10

Thanks to the tension jacks on the TP 015A, drill-holes or screw holes are not needed.

This retaining method also affords a degree of protection IP65 (but only in conjunction with a circumferential seal and when the protective USB cap is fitted).

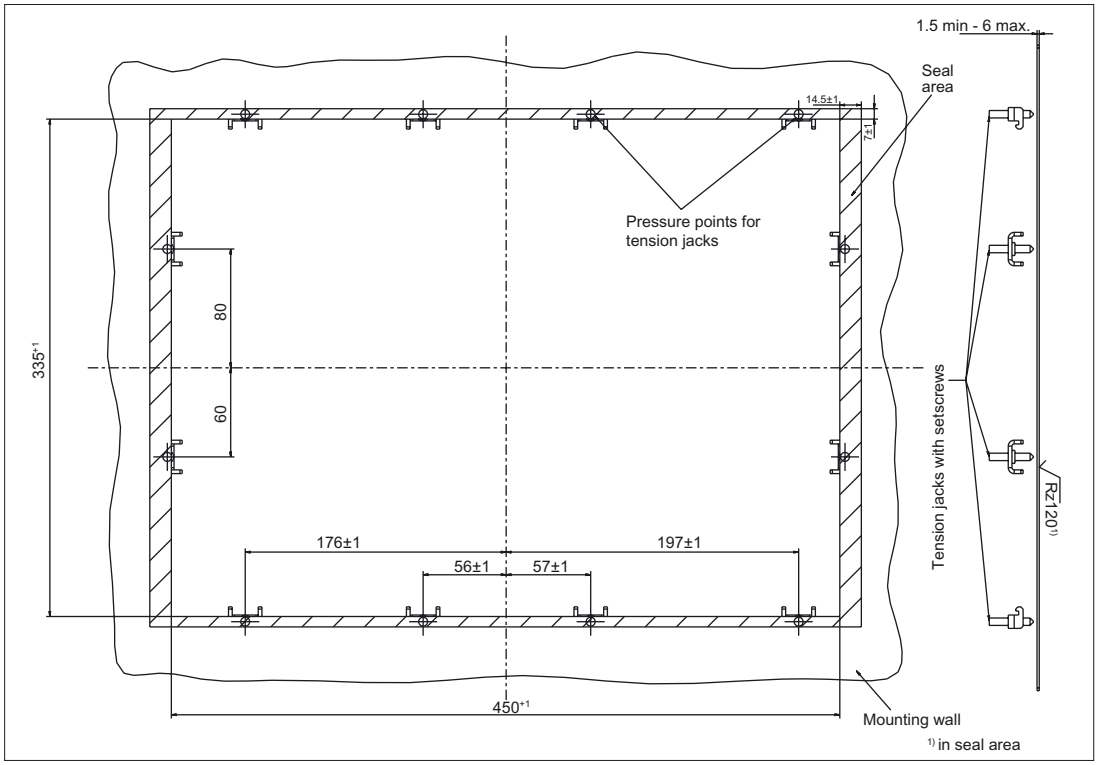

Figure 11-3 Dimension sheet for mounting the TP 015A operator panel front

11.4.2 Assembling TP 015A and PCU

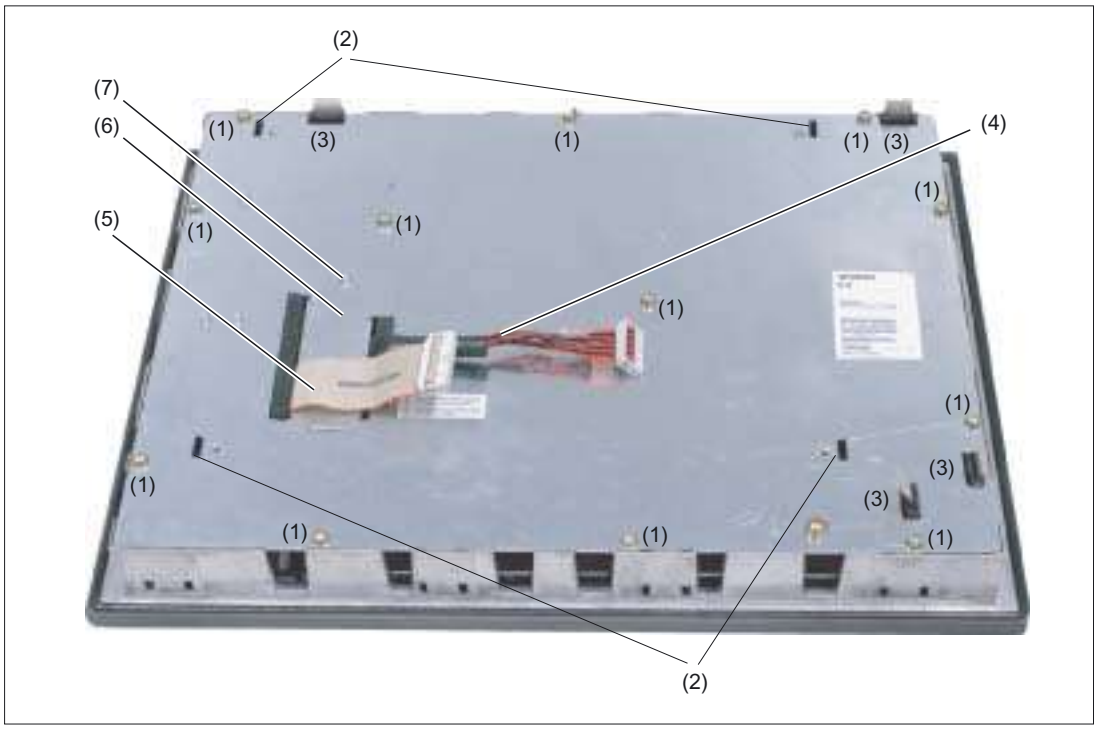

Figure 11-4 Back side of the TP 015A operator panel front

(1) Casing screw (1x concealed under cable K1)
(2) Mounting slots for PCU lugs
(3) Slots for inserting softkey labeling strips
(4) Display cable K2
(5) I/O / USB cable K1
(6) Cover plate for keyboard controller connections
(7) Retaining screw for the cover plate

If you want to combine the TP 015A with a PCU and possibly a direct control key module (see section: "Direct control key module"), assemble the components before installing them on the mounting wall.

Procedure

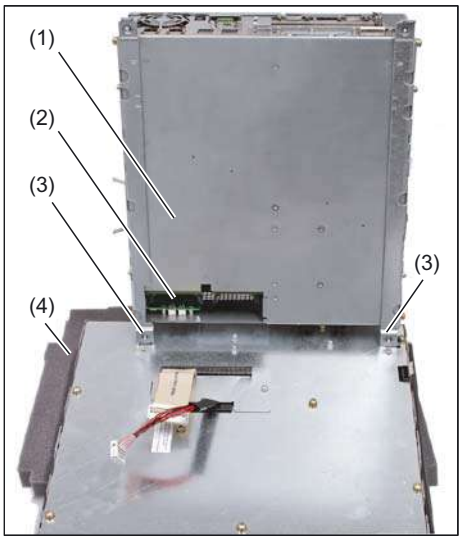

1. Place the front end of the TP 015A on a soft, horizontal support (4) to avoid damaging the surface of the operator panel front.
2. Remove the interface cover (2) of the PCU.
3. Position the PCU so that the mounting lugs (3) engage with the TP 015A.

(1) PCU
(2) Interface cover of the PCU (cover plate removed)
(3) Mounting lugs
(4) Mounting support

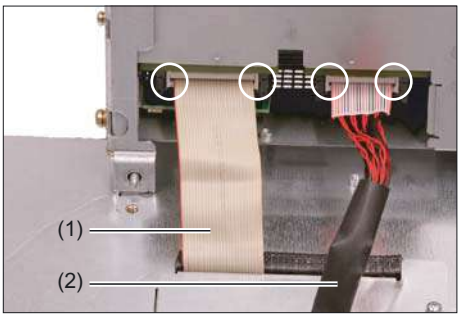

4. Connect cable plugs K1 and K2 to the interfaces of the PCU.
5. Make sure that you hear the connectors lock in and the that locks are closed see (marked rings).

(1) I/O USB cable K1
(2) Display cable K2



6. Swing the PCU in the direction of the TP 015A, making sure the cables are folded correctly.

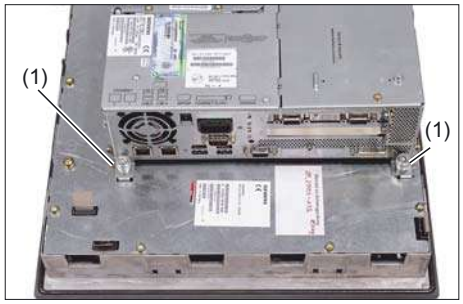

(1) Knurled-head screws

7. Secure the PCU with two knurled-head screws (1) on ends of each mounting angle (torque: 1.8 Nm).
   To tighten the screws, use a torque screwdriver (e. g. FACOM A.302A, torque: 0.5 - 2.5 Nm).

11.4.3 Mounting on the mounting wall

The clearance at the rear of the PCU must be at least 10 mm to ensure sufficient ventilation.

For more detailed information, please refer to the relevant PCU chapters and section: "Heat dissipation."

NOTICE
Permitted mounting position: deviating by up to 5º from the vertical. This value can be further restricted by installed components (PCU, video link receiver, ...).

Procedure

1. Insert the assembled components (operator panel front and PCU) from the front into the panel cutout (see figure:. "Dimension sheet for installing the operator panel front", section: "Preparation for mounting").
2. Secure the operator panel front in the panel cutout from the rear using the twelve tension jacks by tightening the setscrews (torque: 0,5 Nm).

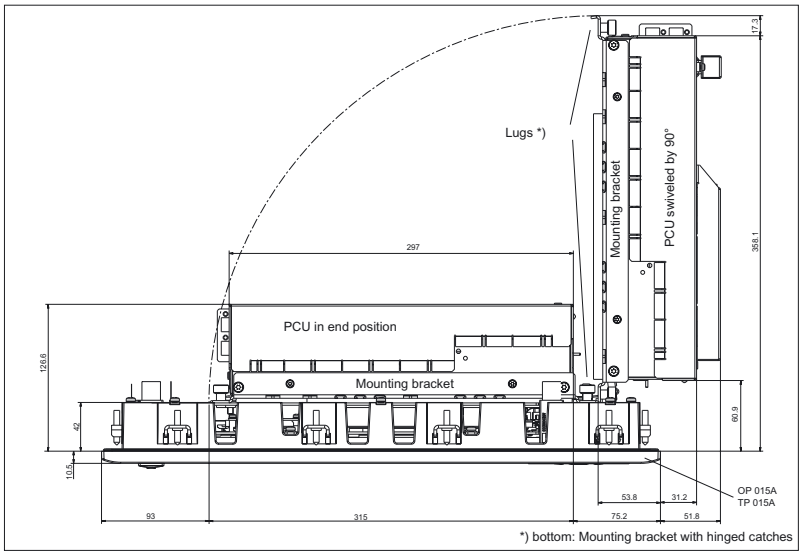

Figure 11-5 Mounting the PCU to the TP 015A operator panel front (as seen from above)

11.4.4 Calibration of the touch screen

Whenever a new operator panel front is connected, the touch screen must be calibrated.

Procedure

For a description of calibration, refer to chapters:

- "PCU 50", section: "Calibration of the touch screen" or
- "PCU 50.3", section: "Start-up" → "Calibration of the touch screen".

11.4.5 Softkey labeling

User-specific functions can be assigned to the two vertical softkey bars. Printed labeling strips can be used to label the softkeys.

Blank labels are already factory-installed.

DIN A4 films are available for preparing the vertical strips. You will find the order number in section: "Spare parts" → "Overview".

Note

Use the "Arial" font to format text. This font is comparable to the "Univers S57" font, used by Siemens for the key labeling.

Proceed as follows

1. Label the mat side of the film with a laser printer or another printer that allows "Film" to be set as a printable medium.
2. Cut the printed labels along the preprinted lines.
3. Insert the labeling strips into the slits provided from the rear of the operator panel front (refer to figure: “TP 015A housing open” in section: "Spare parts" → "Replacement".

   Note

   In order to facilitate insertion of the "Part1" strip when the PCU is mounted, it is recommended that you

   - unscrew the 4 retaining screws of the PCU and
   - swing the PCU up.

   Once you have inserted the strip, swing the PCU back to the operator panel and secure by tightening the screws.

11.5 Technical specifications

Safety			
Safety class	III; PELV acc. to EN 50178		
Degree of protection per EN 60529	Front: IP 65	Rear side: IP00	
Approvals	CE / cULus		
Electrical data			
Power supply (via I/O USB cable and display cable)	Display	Backlight inverter	Logic / USB
Voltage Current (typ./max. mA; approx.)	4.9 V - 5.25 V 420 / 700	12 V +/- 5% 900 / 1100	5.0 V - 5.2 V 350 / 1050
Power consumption	Typical, approx. 15 W	Maximum approx. 25 W	
Mechanical data			
Dimensions	Width: 483 mm Height: 355 mm Depth: 53 mm	Mounting depth without PCU: 42 mm Mounting depth with PCU 50: 127 mm *) Mounting depth with PCU 70: 167 mm *) Mounting depth with TCU: 78 mm *)	
Weight	Approx. 8.4 kg		
Max. tightening torques:	Tension jack screws: 0.5 Nm	M3 screws: 0.8 Nm	M4 screws: 1.8 Nm
Mechanical ambient conditions (with PCU)	**Operation**	**Transport** (in transport packaging)	
Vibratory load	10 – 58 Hz: 0.074 mm 58 – 200 Hz: 1 g	5 – 9 Hz: 3,1 mm 9 – 200 Hz: 1 g	
Shock load	5 g, 30 ms, 18 shocks	30 g, 6 ms 18 shocks	
Climatic environmental conditions			
Cooling	By natural convection		
Moisture condensation, water spray and the formation of ice	Not permissible		
Air inlet	without aggressive gases, dusts and oils		
	Operation	**Storage/shipping** (in transport packaging)	
Applicable standards	EN 60721-3-3	EN 60721-3-1 / -3-2	
Climate class	3K5	1K3 / 2K4	
Temperature limits	0 ... 45 ºC (at front) 0 ... 55 ºC (at rear)	-20 ... 60 ºC (cyclic)	
Temperature change	max. 10 K/h	max. 18 K/h	
Limits for relative humidity	5 ... 65% (annual mean) and max. 85% over 2 months/year, max.	5 ... 95% at 25°C	
Permissible change in the relative air humidity	Max. 6%/h		

Display	
Size / resolution	15" TFT / 1024 x 768 pixels
MTBF backlight	typ. 50 000 h at 25 ºC (dependent on the temperature)

*) measured from the (exterior) mounting panel surface; plus 10 mm clearance for cable and ventilation

11.6 Spare parts

11.6.1 Overview

The diagram shows the TP 015A operator panel front dismantled into its individual parts. The components provided with an order number are available as individual spare parts.

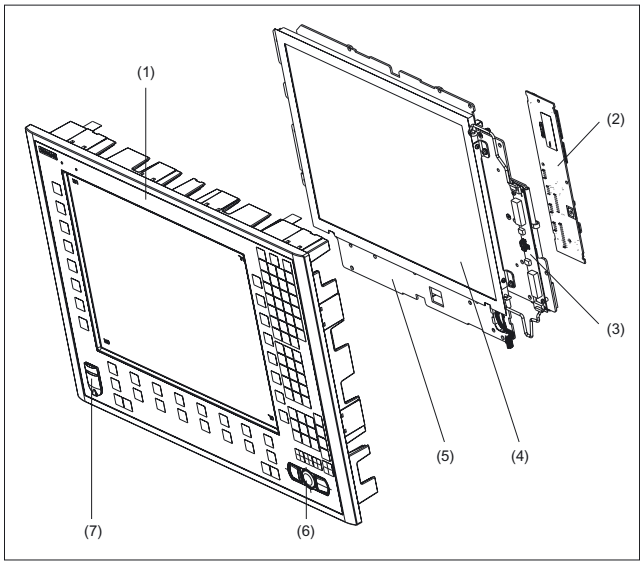

Figure 11-6 Individual parts for the TP 015A operator panel front

	Spare parts	Order No.:	Comments
(1)	Operator panel front	6FC5248-0AF17-0AB0	Without LCD unit, mouse, USB port and keyboard controller
(2)	Keyboard controller		
(3)	Background lighting with backlight inverter		
	Spare parts	**Order No.:**	**Comments**
	Direct control key module	6FC5247-0AF11-0AA0	
	Mounting kit for direct key module	6FC5247-0AF30-0AA0	
(4)	LCD unit		
(5)	Display support		
	Spare parts	**Order No.:**	**Comments**
(6)	USB mouse	6FC5247-0AF01-0AA0	
(7)	Cap for the USB port	6FC5248-0AF05-0AA0	Set of 10
	Tension jacks	6FC5248-0AF14-0AA0	Set of 9
	Mounting bracket	6FC5248-0AF20-2AA0	
	Slide-in labels *) (DIN A4 films)	6FC5248-0AF24-0AA0	Set of 3

*) The dimensions for production of slide-in film labels for softkey labeling can be seen in the following diagrams.

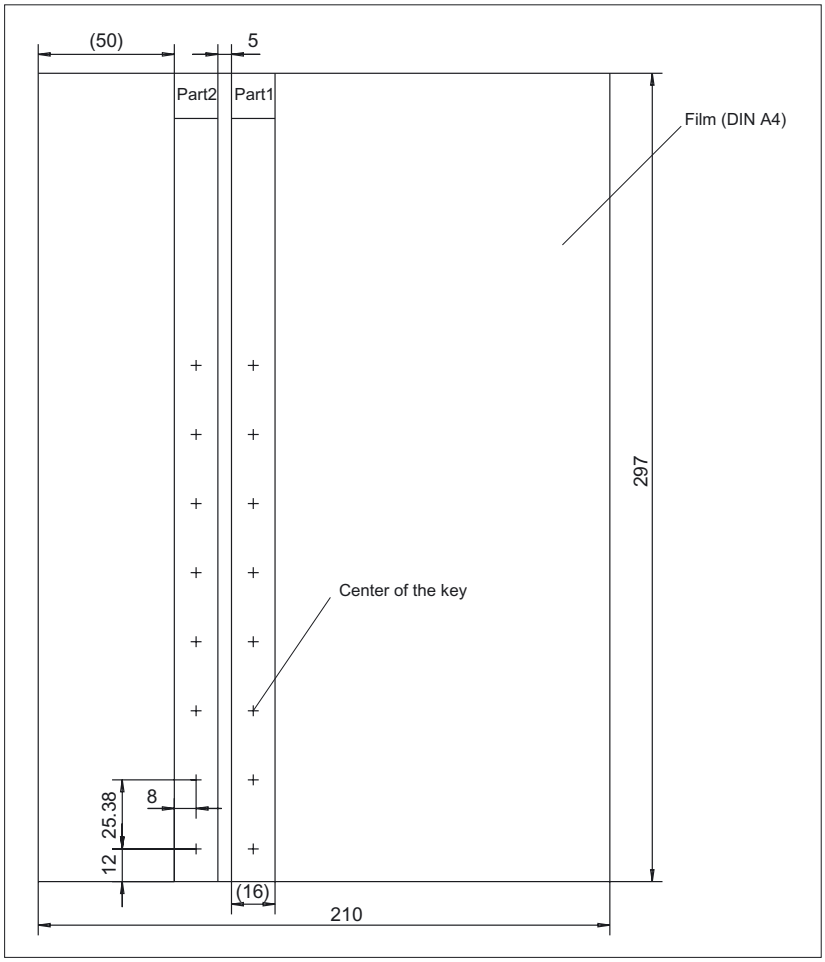

Figure 11-7 Dimensions for vertical slide-in labels

11.6.2 Replacement

CAUTION
Parts must only be replaced by trained personnel (danger of damage to sensitive components due to static electricity)!

USB cap / tension jack

The replacement of the USB sealing cap and tension jacks will not be described since it is simple and self-explanatory.

Operator panel front

When the operator panel front is replaced, the display, keyboard controller, touch controller, mouse and USB port can be used again. They are therefore disassembled and re-assembled after the appropriate component has been replaced.

Note

We recommend that the keypad controller be re-used so that the control parameters that have been programmed-in are not lost.

Dismounting individual parts from the operator panel front

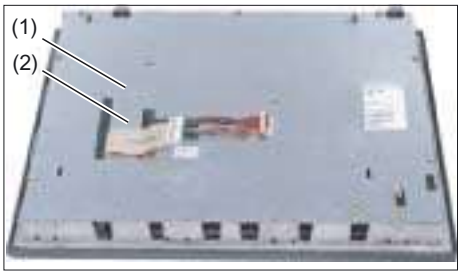

1. Place the TP 015A on a soft, horizontal support.
   Remove the retaining screw (1) from the cover plate (2) and lift off the cover plate.



2. Remove the 13 casing screws
   (see also figure "Rear of TP 015A operator panel front" in section: "Installation"→ "Assembling TP 015A and PCU")
3. LIft off the cover.

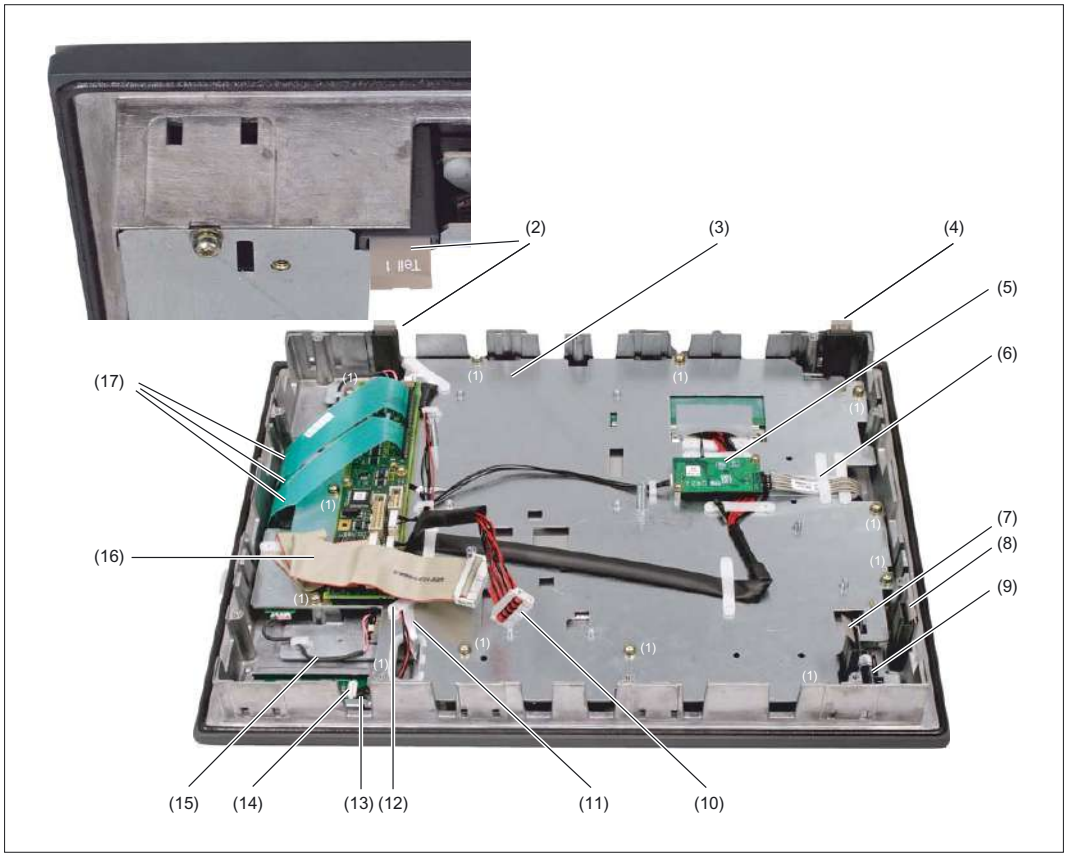

Figure 11-6 TP 015A housing open

(1) Screws (M4) for display support
(2) Slide-in labels (Part1)
(3) Display support
(4) Slide-in labels (Part2)
(5) Touch controller
(6) Retainer for the cable of the touch controller
(7) Slide-in labels (Part4)
(8) Slide-in labels (Part3)
(9) USB interface
(10) Display cable
(11) Ribbon cable for keyboard controller/USB connection
(12) Retainer for the mouse/keyboard controller cable
(13) Port for the mouse
(14) Cable plugs for mouse/keyboard controller
(15) Backlight inverter cable
(16) I/O USB cable
(17) Keyboard cable

Touch controller

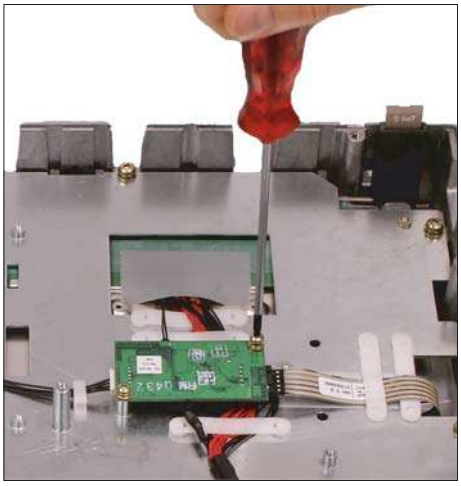

4. Remove the screws (M3) that are holding the touch controller to the display support. Do this with a TX10 screwdriver.

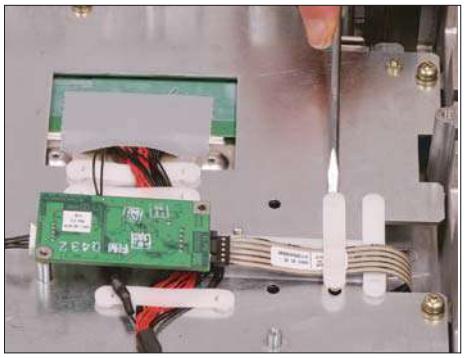

5. Remove the retainer of the touch screen/touch controller cable with a flat screwdriver.

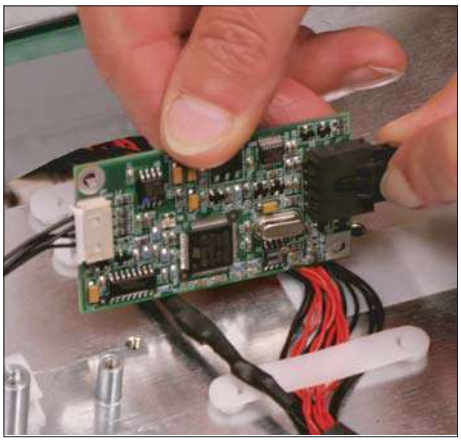

6. Remove the plug connectors from the touch controller by pushing in the retaining lug.

Backlight inverter cable



7. Remove the two cables to the backlight inverter (to the left and right of the display support) by raising the clamps with a flat screwdriver and pulling out the cables.

Keyboard controller/mouse connection

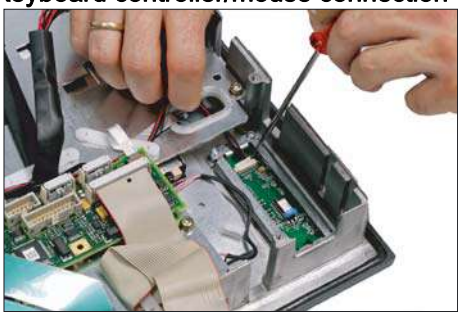

8. Disconnect the connection from the keyboard controller to the mouse by carefully pushing the plug back with a screwdriver.

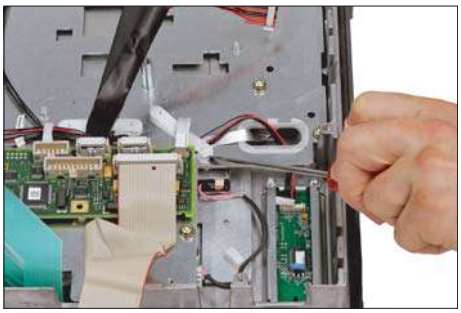

9. Remove the retainer for the cable from the keyboard controller to the mouse.

Keyboard controller/USB port connection

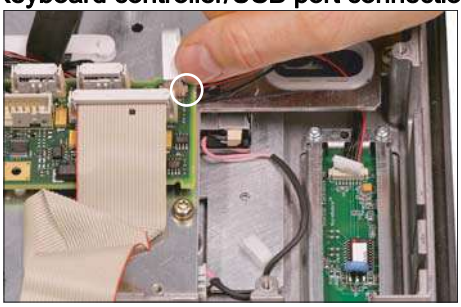

10. Disconnect the connection from the USB port to the keyboard controller by pulling back the terminal clamps to the left and right of the plug.

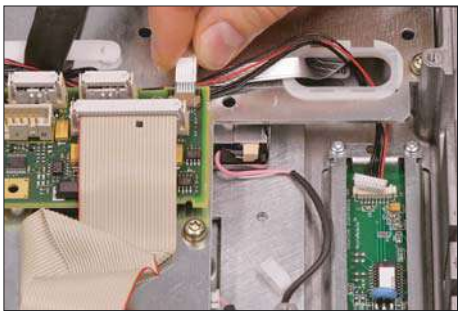

11. Remove the plug of the USB cable from the keyboard controller.

Keyboard cable

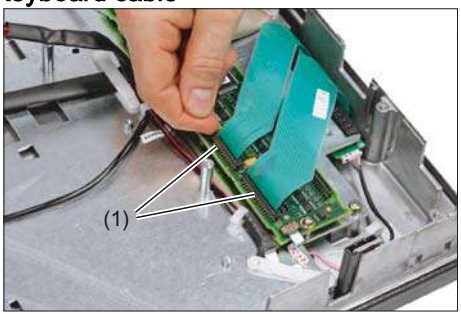

12. Disconnect the 3 keyboard cables by pushing up the terminal holders (1) on the keyboard controller and pulling the keyboard cables from the bracket.

    For detailed information about removal and insertion of membrane connectors, see also chapter: "Connection conditions" → "Handling membrane connectors".

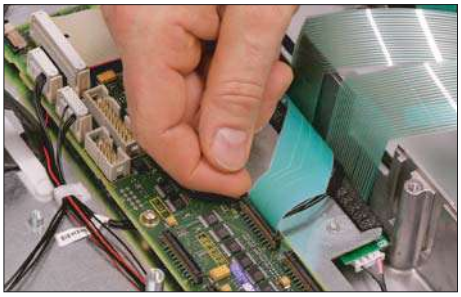

Display support

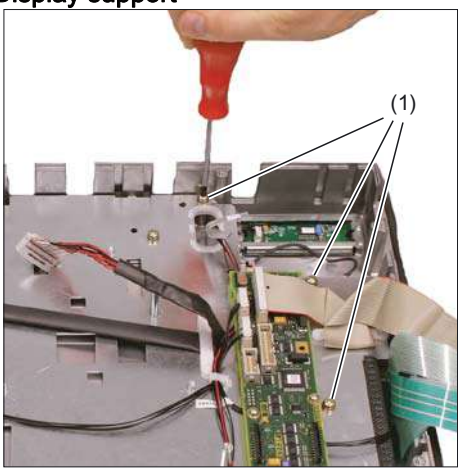

13. Remove the 12 screws (1) from the display support.
    For the arrangement of the screws on the display support, refer to figure: "TP 015A housing open".

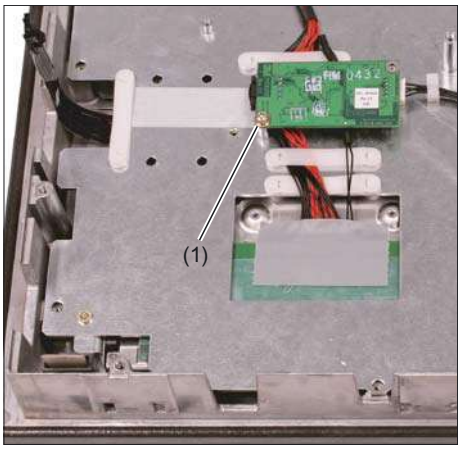

14. Before removing the display support, secure the touch controller with a screw (1) that you tighten by hand.
This ensures that the touch controller is protected when storing the display support. Otherwise, the touch controller could get squeezed or damaged, thus rendering it inoperable.

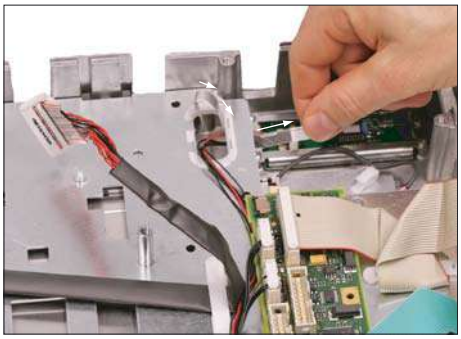

15. Insert the USB ribbon cable in the direction of the arrow through the opening and pull it out.

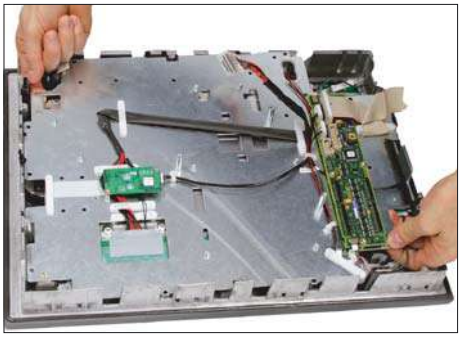

16. LIft off the display support.

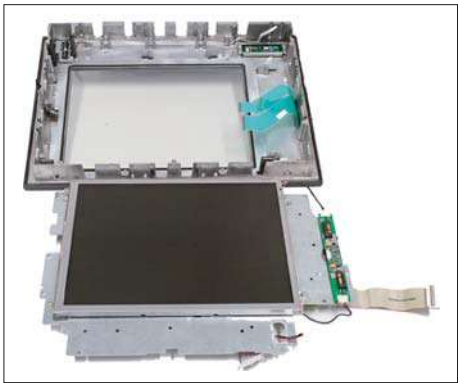

17. Place the display support down on its back side to avoid damaging the display.

USB board



18. Remove the USB port by sliding up both retaining clamps and pulling out the board.

Mouse board

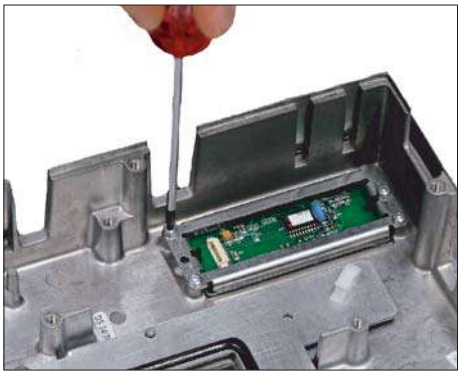

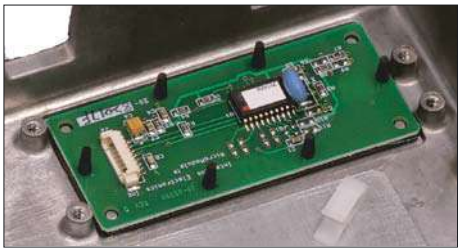

19. Remove the 4 screws (M3) on the bracket for the mouse board. Lift off both the bracket and the mouse board.

Installing the individual parts in the operator panel front

1. Remove the transportation safety precautions (adhesive strip for securing cables) and the screen protective sheeting from the inside.
2. Install the individual parts in the new operator panel front in the order indicated:

19. Mouse board and bracket

18. USB board

Press the USB board until you hear it lock into the retaining clamps.

Check the secured position of the USB cable behind the guide pins (1).

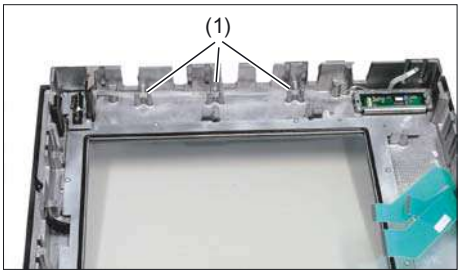

17. - 13. Display support

17. Bend the keyboard cables (1) back slightly before inserting the display support. Otherwise, the keyboard cables could become squeezed or damaged, thus rendering them inoperable.

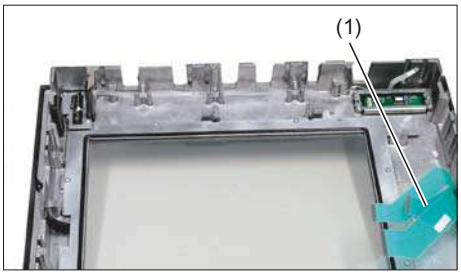

15. Insert the USB ribbon cable against the direction of the arrow through the opening and pull it out.

12. Keyboard cable

11. - 10. Keyboard controller/USB port connection

11. Ensure that the contact side (1) of the USB cable faces up.

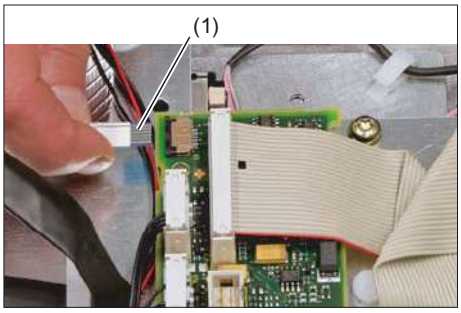

9. - 8. Keyboard controller/mouse connection

7. Backlight inverter cable

6. - 4. Touch controller

3. - 1. Cover

Note

Pay attention to the torques when tightening the screws
(see section: "Technical specifications").

Operator panel front: OP 015AT

12

12.1 Description

The SINUMERIK OP 015AT operator panel front with 15" TFT color display and 1024 x 768 pixels (XGA) enables the distributed installation of the operator panel front and the controller. It features a membrane keyboard with 62 keys and 2 x (8 + 2) horizontal and 2 x 8 vertical softkeys and an integrated mouse. The distance to the operator panel fronts is determined by the maximum distance between two network nodes/access points (100 m/328 ft).

The OP 015AT operator panel front is connected to the PCU/NCU via Ethernet as a Thin Client in its own subnet (via DHCP server to PCU/NCU).
Mixed operation with an operator panel connected directly to the PCU is possible.

The operator panel front is secured from the rear using special clamps supplied with the panel.

Validity

The description below applies to operator panel OP 015AT
(Order No. 6FC5203–0AF05–1AB0)

Features

- Ethernet 10/100 Mbit/s
- 3 x USB 1.1 (2 x rear, 1 x front)
- 15" TFT flat screen (color) with resolution 1024 x 768 pixels
- Membrane keyboard with alphabetic, numeric, cursor, and control keypad
- Soft keys/direct keys:
  - 2 x (8 + 2) horizontal rows of keys with softkey function
  - 2 x 8 vertical rows of keys with softkey and direct key functions (can be used with SINUMERIK 840D sl /840Di sl)
- Shift key for switchover to the second key level (not for switching over the letters, since they are uppercase only)
- Integrated mouse
- Status LEDs for power supply and overtemperature
- Slight mounting depth
- Panel cutout (W x H): 450 x 335 mm
- IP65 protection rating
- Attachment: tension jacks at the rear

The SINUMERIK TP 015AT operator panel front can be used for:

- SINUMERIK 810D/840D

SINUMERIK PCU 50/PCU 70	•	with Windows XP and PCU Base software Thin Client as from 7.4	
		MLFB	6FC5253-7CX10-4XA8
			6FC5253-7CX11-5XU8
	•	with Windows XP SP2	
		MLFB	6FC5253-7CX11-5XU8
			6FC5253-7CX10-5XU8

- SINUMERIK 840 D sl
  - NCU 710.1 / NCU 720.1 / NCU 730.1
  - SINUMERIK PCU 50.3
- SINUMERIK 840 Di sl

12.2 Operator controls and display elements

12.2.1 View

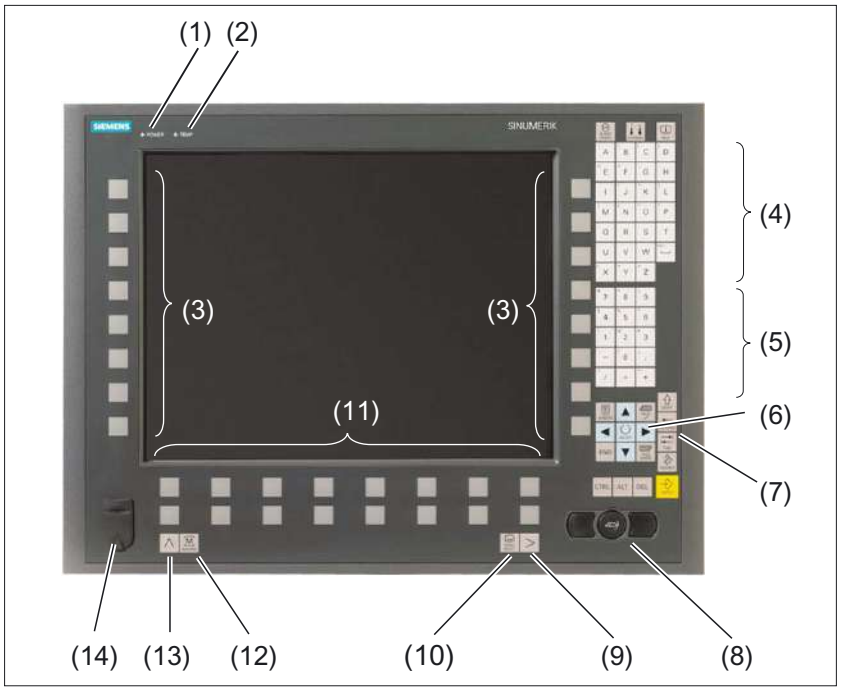

Figure 12-1 Front view of the OP 015AT operator panel front

(1) Status LED: POWER
(2) Status LED: TEMP
(illuminated LEDs indicate increased wear)
(3) Softkeys and direct keys
(4) Alphabetic key group
(5) Numeric key group
(6) Cursor key group
(7) Control key group
(8) Mouse
(9) Etc. key
(10) Area switchover
(11) Softkeys
(12) Machine area
(13) Recall
(14) Front USB interface

12.2.2 Keyboard and display

Keyboard

Several keys and key pads are installed on the operator panel front:

- The alphabetic key group contains the letters A - Z and the space character for entering text.
- The numeric key group contains the digits 0 – 9, the "–", "+", "=" characters, the slash "/", and the decimal point for entering numeric characters and operators.
- The cursor key group is used to navigate on the screen.
- The control key group includes special functions.
- The mouse comprises the actuation field (corresponds to the function of a tracker ball) and two mouse keys for navigation.
- The area switchover shows the area menu.
- The etc. key allows for an expansion of the horizontal softkey bar in the same menu.
- The softkeys call up functions that are available on screen via a menu bar.
- The machine area key switches directly into the "Machine" operating area.
- The recall key jumps back to the superordinate menu. One window is closed.

The key symbols used on the operator panel front appear below along with the corresponding function keys on the PC keyboard.

Key	Function corresponds to PC key function	Key	Function corresponds to PC key function
ALARM CANCEL	Esc	END	End
1...n CHANNEL	F11	BACKSPACE	Backspace
HELP	F12	TAB	Tab
␣	Space	SHIFT	(only intended for internal keyboard changeover)
NEXT WINDOW	Home	CTRL	Ctrl key
PAGE UP	Page up	ALT	Alt key
PAGE DOWN	Page down	DEL	Delete
▲	Cursor up	INSERT	Insert
◀	Cursor left	INPUT	Enter
▶	Cursor right	∧	F9

Key	Function corresponds to PC key function	Key	Function corresponds to PC key function
▼	Cursor down	MENU SELECT	F10
◯ SELECT	5 (in numeric key group)	A, ..., Z	<Shift> A, ..., Z
>	<Shift> F9	M MACHINE	<Shift> F10

You will find information about softkeys in

- \BAD\ Operator's Guide HMI Advanced
- \BEM\ Operator's Guide HMI Embedded

Display

Note

Pixel error acc. to DIN EN ISO 13406-2 Class II.

12.2.3 Screen saver

If a screen with high contrast is displayed unchanged for longer than 1 hour, the screensaver must be activated (screen switched dark) to protect the TFT display from "burn-in" of the last displayed screen.

For more information see:

/BEM/: HMI Embedded Operator's Guide

/IAM/: IM2 Installation and Start-up HMI Embedded; IM4 Installation and Start-up HMI Advanced

CAUTION
You may do irreversible damage to your TFT display if the screen saver is not activated.

12.3 Interfaces

12.3.1 Overview

The OP 015AT operator panel front has the following interfaces:

Front

USB 1.1 to connect an external keyboard, mouse, or USB FlashDrive (see Fig.: "Front view of OP 015AT operator panel front" in section: "Control and display elements" → "View")

Note

Note that the electromagnetic compatibility of commercially available peripheral devices operated via the USB port is usually rated for office use only.

For industrial use, components with a higher degree of certification are recommended.

Rear side

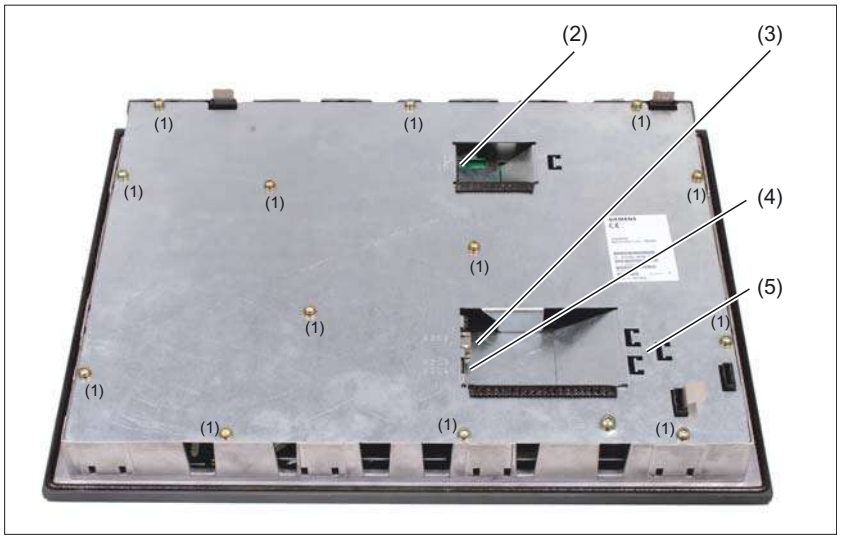

Figure 12-2 OP 015AT - Rear with interfaces

(1)		Blanking plate screws (M4)
(2)	X206	Power Supply
(3)	X202	Ethernet port
(4)	X203 / X 204	USB interface
(5)		Strain relief for connecting cable

12.3.2 Description

Signal type

BI Bi-directional
V Supply voltage
O Output
I Input

Ethernet interface X202

Interface:	Ethernet
Connector designation:	X202
Type:	8-pole RJ45 socket
Cable length max.:	100 m (shielded twisted pair)

Pin	Name	Type	Meaning
1	TxD+	O	Transmit data +
2	TxD-		Transmit data -
3	RxD+	I	Receive data +
4/5	GND	-	terminated internally with 75 Ω; not required for data transmission
6	RxD -	I	Receive data -
7/8	GND	-	terminated internally with 75 Ω; not required for data transmission

Note

The direct keys are also led out through this interface.

USB interfaces

Front:

The USB interface on the front side of the operator panel front can be loaded with 500 mA.

Rear panel: X203 / X 204

Interface:	USB
Connector designation:	X203 / X204
Type:	2 x 4-way USB socket, type A (one of the interfaces can be loaded with 500 mA (high current), the other of the two, with 100 mA.)
Cable length max.:	Mouse, keyboard: 5m if hub used: 3.5 m *)

*) Length incl. supply lead to hub and connected terminal unit; max. 1 hub permissible. Please note that some keyboards already include a hub.

Pin	USB port	Name	Type	Meaning
A1	2	USB_P5	V	+ 5V fused
A2	2	USB_1M	BI	Data-
A3	2	USB_1P		Data +
A4	2	USB_GND	V	Ground (reference potential)
B1	3	USB_P5		+ 5V fused
B2	3	USB_2M	BI	Data-
B3	3	USB_2P		Data +
B4	3	USB_GND	V	Ground (reference potential)

Power supply X206

The pin assignment of this interface can be found in Section: "Connection conditions" → "Pin assignments of the interfaces".

12.4 Assembly

12.4.1 Mounting

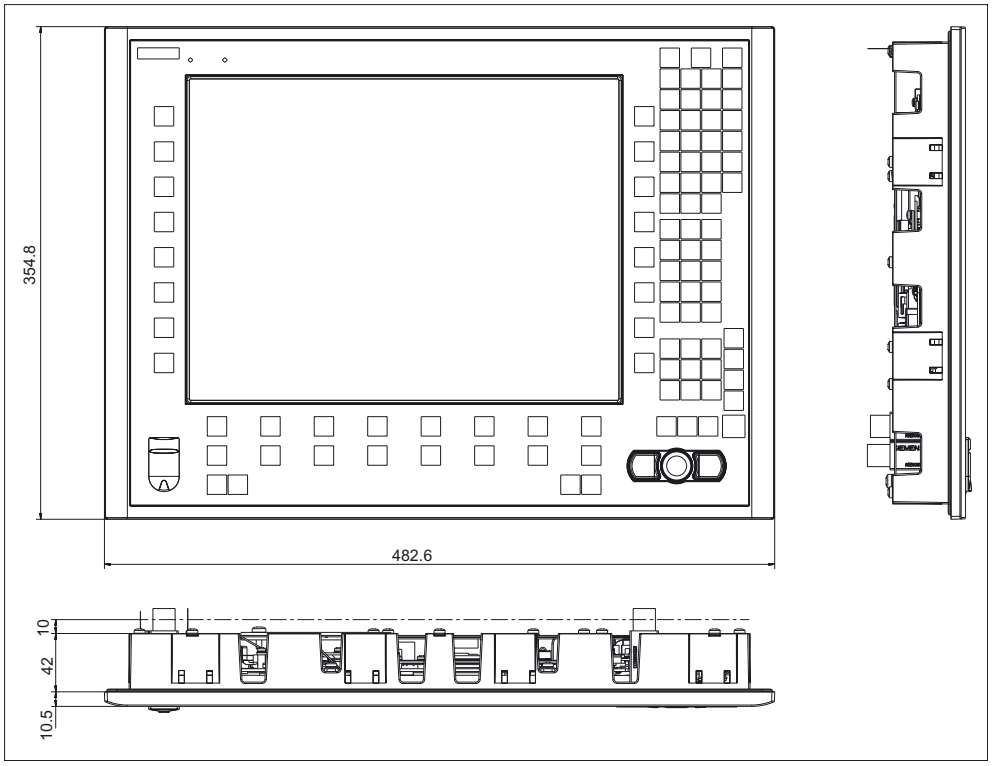

Figure 12-3 OP 015AT with TCU (integrated)

Thanks to the tension jacks on the OP 015AT, drill-holes or screw holes are not needed.

This retaining method also affords a degree of protection IP65 (but only in conjunction with a circumferential seal and when the protective USB cap is fitted).

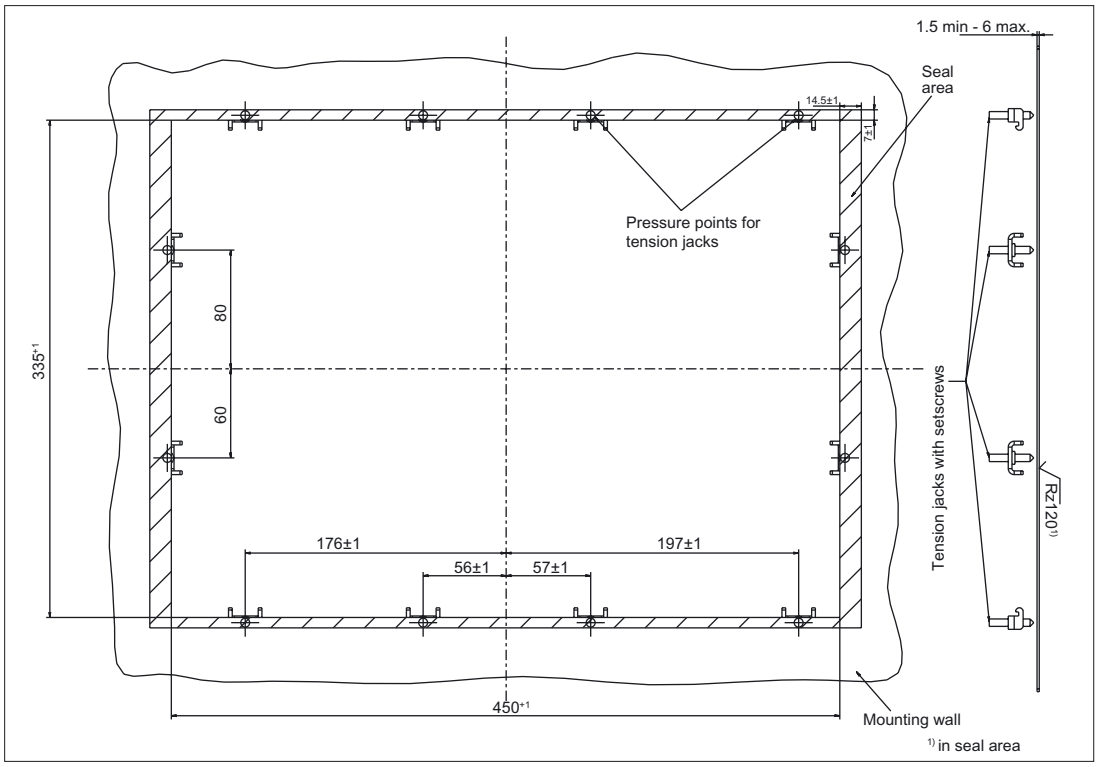

Figure 12-4 Dimension sheet for installing the OP 015AT operator panel front

12.4.2 Softkey labeling

User-specific functions can be assigned to the horizontal and vertical softkey bars. Printed labeling strips can be used to label the softkeys.

Blank labels are already installed on delivery.

To make the vertical labels, DIN-A4 film is available (Order No., see Section: "Spare parts").

Note

Use the "Arial" font to format text. This font is comparable to the "Univers S57" font, used by Siemens for the key labeling.

Proceed as follows

1. Letter the mat side of the film using a laser printer.
2. Cut the printed labels along the preprinted lines.
3. Insert the labeling strips into the slits provided at the rear of the operator panel front (refer to Fig.: "OP 015AT Housing open" in Section: "Spare parts" → "Replacement").

12.5 Technical data

Safety			
Safety class	III; PELV acc. to EN 50178		
Degree of protection to EN 60529	Front: IP65	Rear side: IP00	
Certificates and approvals	CE / cULus		
Electrical data			
Power Supply	24 V DC		
Current input	Typical, approx. 0.9 A	Max. approx. 1.5 A	
Power consumption	Typical, approx. 22 W	Maximum approx. 36 W	
Mechanical data			
Dimensions	Width: 483 mm Height: 355 mm Depth: 53 mm	Mounting depth: 42 mm	
Weight	Approx. 7.6 kg		
Tightening torques, max.	Tension jack screws: 0.5 Nm	M3 screws: 0.8 Nm	M4 screws: 1.8 Nm
Mechanical ambient conditions	**Operation**	**Transport** (in transport packaging)	
Vibration stressing	10 – 58 Hz: 0.074 mm 58 – 200 Hz: 1g	5 – 9 Hz: 3.1 mm 9 – 200 Hz: 1g	
Shock stressing	5 g, 30 ms, 18 shocks	30 g, 6 ms, 18 shocks	
Climatic environmental conditions			
Cooling	By natural convection		
Condensation, spraying water and icing	Not permitted		
Air inlet	Without caustic gases, dusts and oils		
	Operation	**Storage/shipping** (in transport packaging)	
Applicable standards	EN 60721-3-3	EN 60721-3-1 / -3-2	
Climate class	3K5	1K3 / 2K4	
Temperature limits	0 ... 45 ºC (at front) 0 ... 55 ºC (at rear)	-20 ... 60 ºC (cyclic)	
Temperature change	Max. 10 K/h	Max. 18 K/h	
Limits for relative humidity	5 ... 65% (annual average)	10 ... 95% at 25°C	
Permissible change in the relative air humidity	Max. 6%/h		
Display			
Size / resolution	15 " TFT / 1024 x 768 pixels		
MTBF backlight	typ. 50 000 h at 25 ºC (dependent on the temperature)		

12.6 Spare parts

12.6.1 Overview

The diagram shows the OP 015AT operator panel front disassembled into its individual parts.
The components provided with an order number are available as individual spare parts.

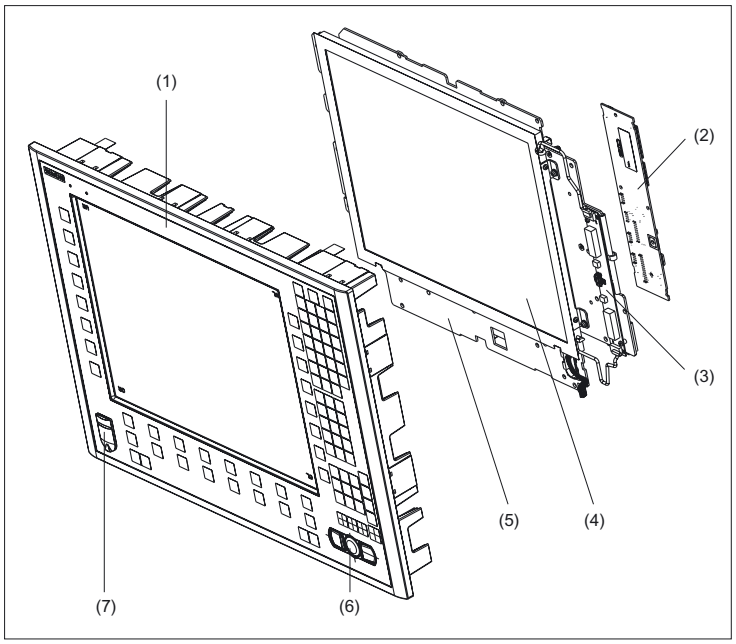

Figure 12-5 Individual parts for the OP 015AT operator panel front

	Spare parts	Order No.:	Comment
(1)	Operator panel front	6FC5248-0AF17-0AB0	Without LCD unit, mouse, USB port and keyboard controller
(2)	Keyboard controller		
(3)	Background lighting with backlight inverter		
(4)	LCD unit		
(5)	Display support		
	Spare parts	**Order No.:**	**Comment**
(6)	USB mouse	6FC5247-0AF01-0AA0	
(7)	Cap for the USB port	6FC5248-0AF05-0AA0	Set of 10
	Tension jacks	6FC5248-0AF14-0AA0	Set of 9
	Slide-in labels *) (DIN A4 films)	6FC5248-0AF24-0AA0	Set of 3

*) The dimensions for production of film slide-in labels for softkey labeling can be seen in the following diagram.

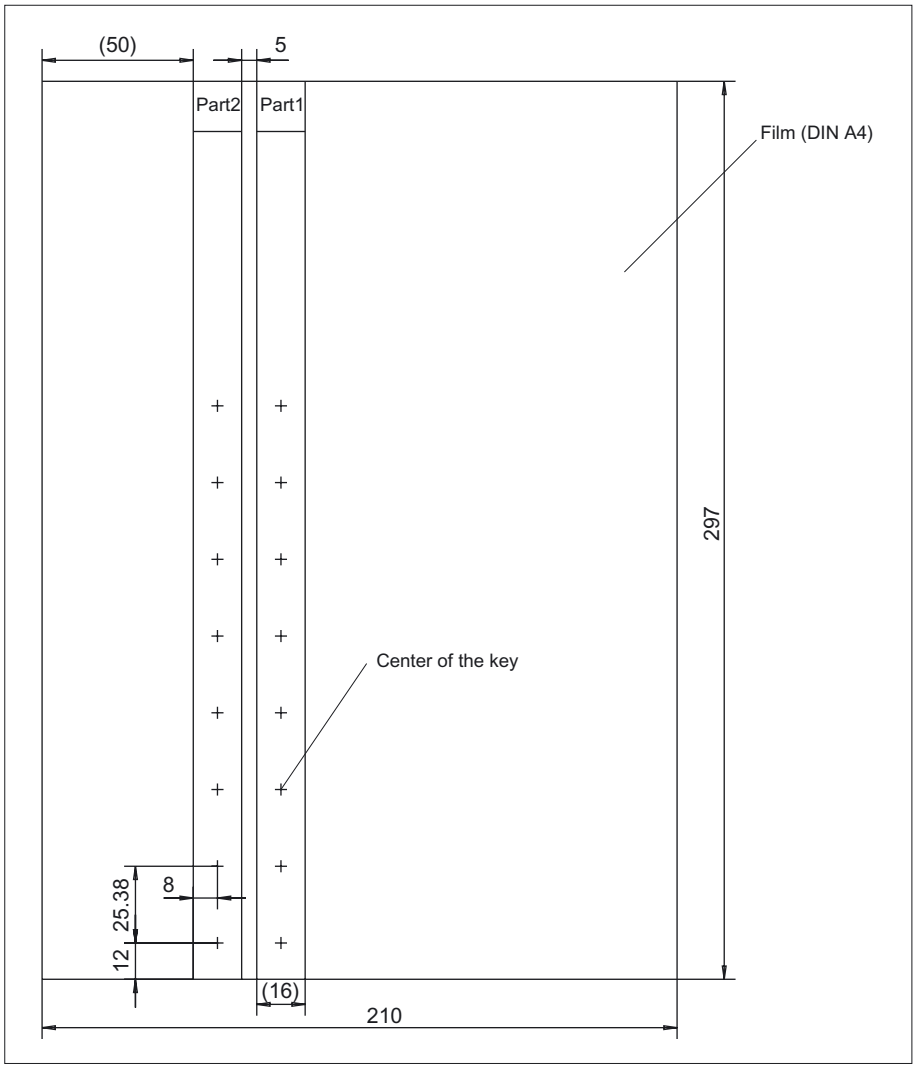

Figure 12-6 Dimensions for vertical slide-in labels

12.6.2 Replacement

CAUTION
Parts must only be replaced by trained personnel (danger of damage to sensitive components due to static electricity)!

USB cap / tension jack

The replacement of the USB sealing cap and tension jacks will not be described since it is simple and self-explanatory.

Operator panel front

When the operator panel front is replaced, the display, keyboard controller, mouse, and USB port can be used again. They are therefore disassembled and re-assembled after the front panel has been replaced.

Note

We recommend that the keypad controller be re-used so that the control parameters that have been programmed-in are not lost.

Dismounting individual parts from the operator panel front

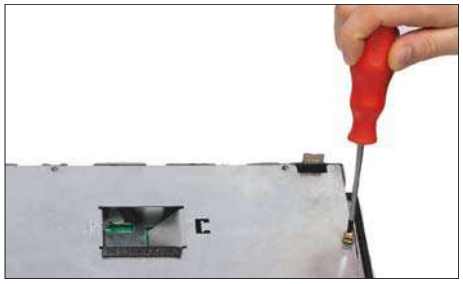

1. Place the OP 015AT on a soft horizontal surface. Loosen the 13 casing screws (see also figure: "OP 015AT - rear with interfaces" in Section: "Interfaces" → "Overview").
2. Lift off the cover.

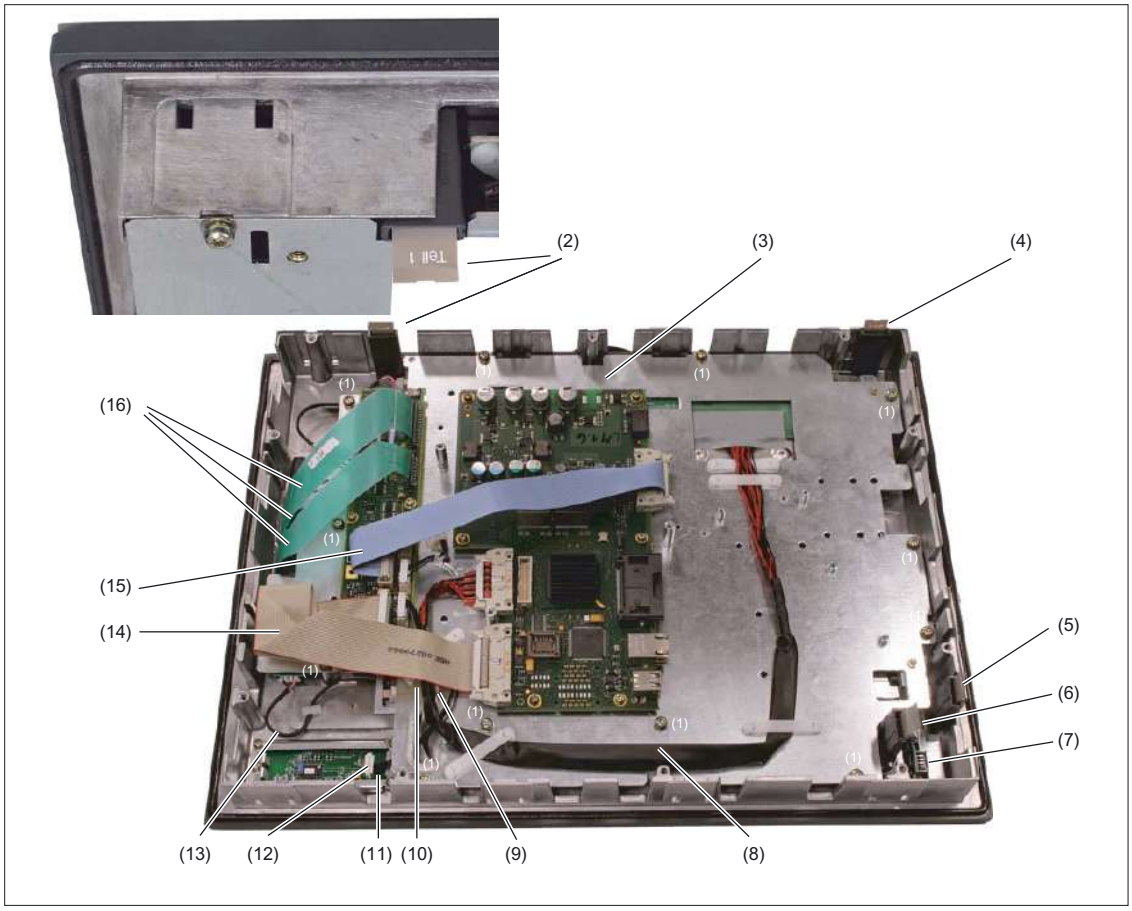

Figure 12-7 OP 015AT housing opened

(1) Screws (M4) for display support
(2) Slide-in strips (Part1)
(3) Display support
(4) Slide-in strips (Part2)
(5) Slide-in strips (Part3)
(6) Slide-in strips (Part4)
(7) USB interface
(8) Display cable
(9) Ribbon cable for keyboard controller / USB connection
(10) Retainer for the mouse / keyboard controller cable
(11) Port for the mouse
(12) Cable plug for mouse / keyboard controller
(13) Backlight inverter cable
(14) I/O USB cable
(15) Direct key cable
(16) Keyboard cable

Backlight inverter cable

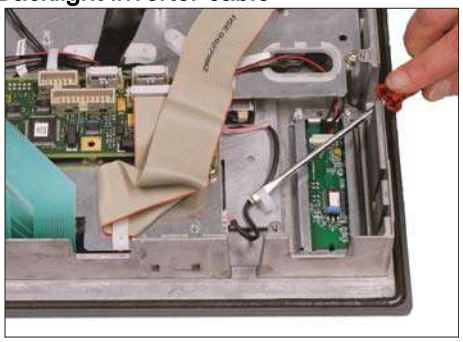

3. Remove the two cables to the backlight inverter (to the left and right of the display support) by raising the clips with a flat screwdriver and pulling out the cables.

Connection of keyboard controller / mouse

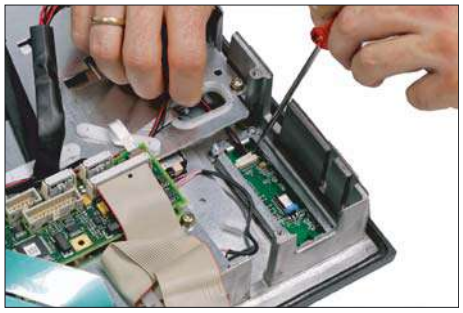

4. Disconnect the connection from the keyboard controller to the mouse by carefully pushing the plug back with a screwdriver.

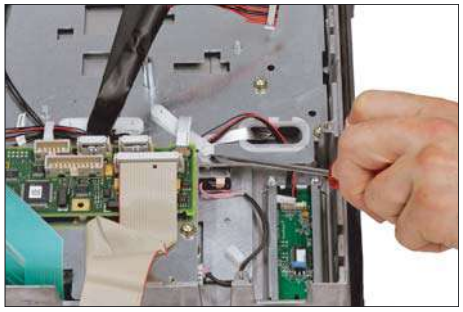

5. Remove the retainer for the cable from the keyboard controller to the mouse.

Connection of keyboard controller / USB port

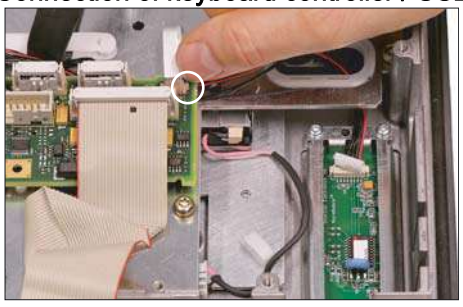

6. Disconnect the connection from the USB port to the keyboard controller by pulling back the terminal clamps to the left and right of the plug.

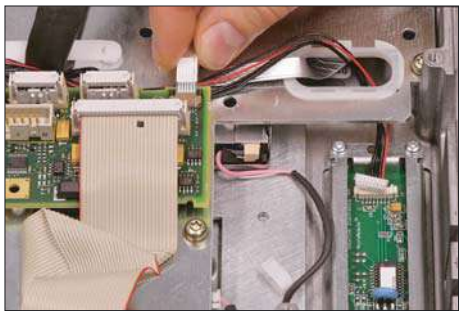

7. Remove the plug of the USB cable from the keyboard controller.

Keyboard cable

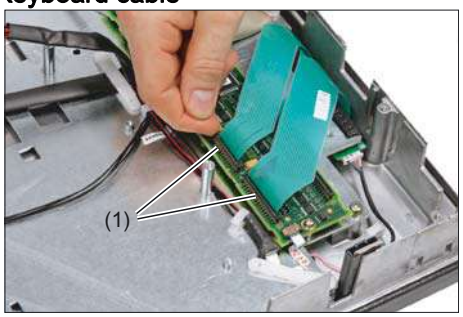

8. Disconnect the 3 keyboard cables by pushing up the terminal holders (1) on the keyboard controller and pulling the keyboard cables from the bracket.

   For detailed information about removal and insertion of membrane connectors, see also chapter: "Connection conditions" → "Handling membrane connectors".

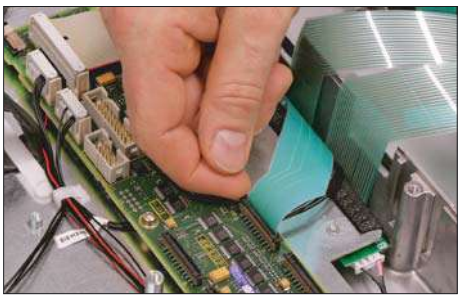

Display support

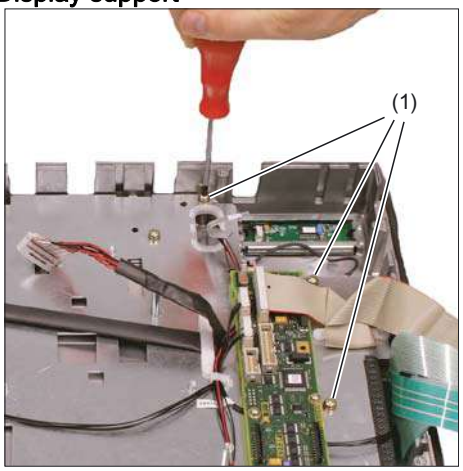

9. Remove the 12 screws (1) from the display support.
   For the arrangement of the screws on the display support, refer to figure: "OP 015AT housing opened".

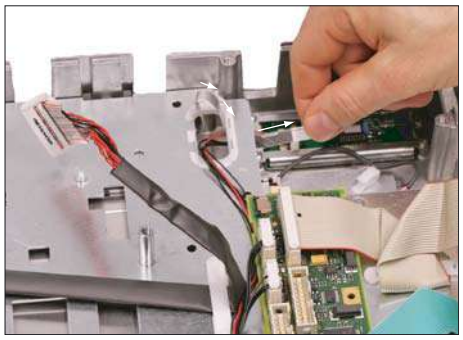

10. Insert the USB ribbon cable in the direction of the arrow through the opening and pull it out.
11. Lift off the display support.

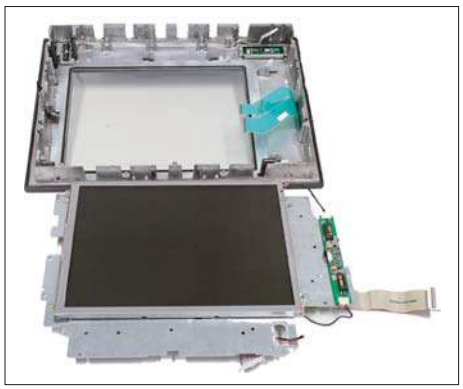

12. Place the display support on its back side to avoid damaging the display.

USB board



13. Remove the USB port by sliding up both retaining clamps and pulling out the board.

Mouse board

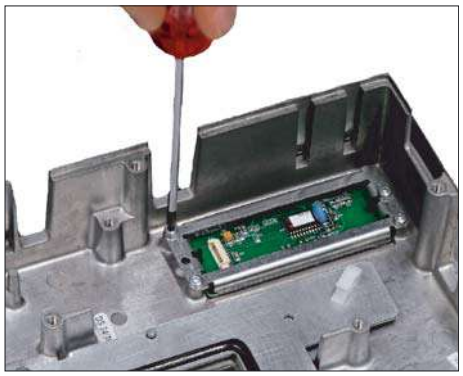

14. Loosen the 4 screws (M3) on the bracket for the mouse board. Lift off both the bracket and the mouse board.

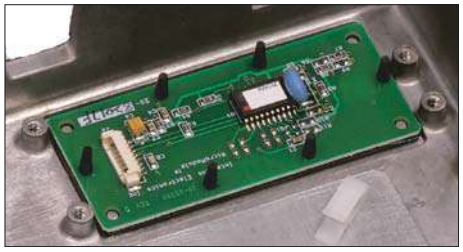

Installing the individual parts of the operator panel front

1. Remove the transportation safety precautions (adhesive strip for securing cables) and the screen protective sheeting from the inside.
2. Install the components in the new operator panel front in the order indicated:

14. Mouse board and bracket

13. USB board

Press the USB board into place until you hear it lock into the retaining clamps.

Check the secured position of the USB cable behind the guide pins (1).

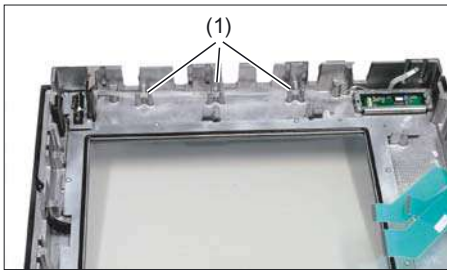

12. - 9. Display support

12. Bend the keyboard cables (1) back slightly before inserting the display support.
    Otherwise, the keyboard cables could become squeezed or damaged, thus rendering them inoperable.

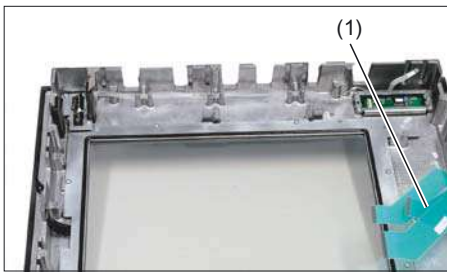

10. Insert the USB ribbon cable against the direction of the arrow through the opening and pull it out.

8. Keyboard cable

7. - 6. Connection of keyboard controller / USB port

7. Ensure that the contact side (1) of the USB plug faces up.

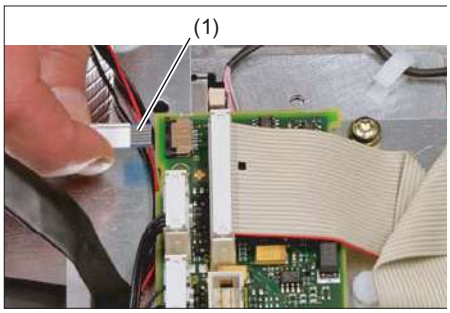

5. - 4. Connection of keyboard controller / mouse

3. Backlight inverter cable

2. - 1. Cover

Note

Pay attention to the torques when tightening the screws (see section: "Technical specifications").

Operator panel front: TP 015AT 13

13.1 Description

The SINUMERIK TP 015AT operator panel front with 15" TFT color display, 1024 x 768 pixels (XGA), and touch screen enables the distributed installation of the operator panel front and the controller. It features a membrane keyboard with 62 keys and 2 x (8 + 2) horizontal and 2 x 8 vertical softkeys and an integrated mouse. The distance to the operator panel fronts is determined by the maximum distance between two network nodes/access points (100 m/328 ft).

The TP 015AT operator panel front is connected to the PCU/NCU via Ethernet as a Thin Client in its own subnet (via DHCP server to PCU/NCU).
Mixed operation with additional TCUS and an operator panel connected directly to the PCU is possible.

The operator panel front is secured from the rear using special clamps supplied with the panel.

Validity

The description below applies to operator panel front TP 015AT
(Order No. 6FC5203–0AF08–1AB0)

Features

- Ethernet 10/100 Mbit/s
- 3 x USB 1.1 (2 x rear, 1 x front)
- 15" TFT flat screen (color) with resolution 1024 x 768 pixels
- Membrane keyboard with alphabetic, numeric, cursor, and control keypad
- Soft keys/direct keys:
  - 2 x (8 + 2) horizontal rows of keys with softkey function
  - 2 x 8 vertical rows of keys with softkey and direct key functions (can be used with SINUMERIK 840D sl /840Di sl)
- Shift key for switchover to the second key level (not for switching over the letters, since they are uppercase only)
- Integrated mouse
- Status LEDs for power supply and overtemperature
- Slight mounting depth
- Panel cutout (W x H): 450 x 335 mm
- IP65 protection rating
- Attachment: tension jacks at the rear

The SINUMERIK TP 015AT operator panel front can be used for:

- SINUMERIK 810D/840D

SINUMERIK PCU 50/PCU 70	•	with Windows XP and PCU Base software Thin Client as from 7.4	
		MLFB	6FC5253-7CX10-4XA8
			6FC5253-7CX11-5XU8
	•	with Windows XP SP2	
		MLFB	6FC5253-7CX11-5XU8
			6FC5253-7CX10-5XU8

- SINUMERIK 840 D sl
  - NCU 710.1 / NCU 720.1 / NCU 730.1
  - SINUMERIK PCU 50.3
- SINUMERIK 840 Di sl

13.2 Operator controls and display elements

13.2.1 View

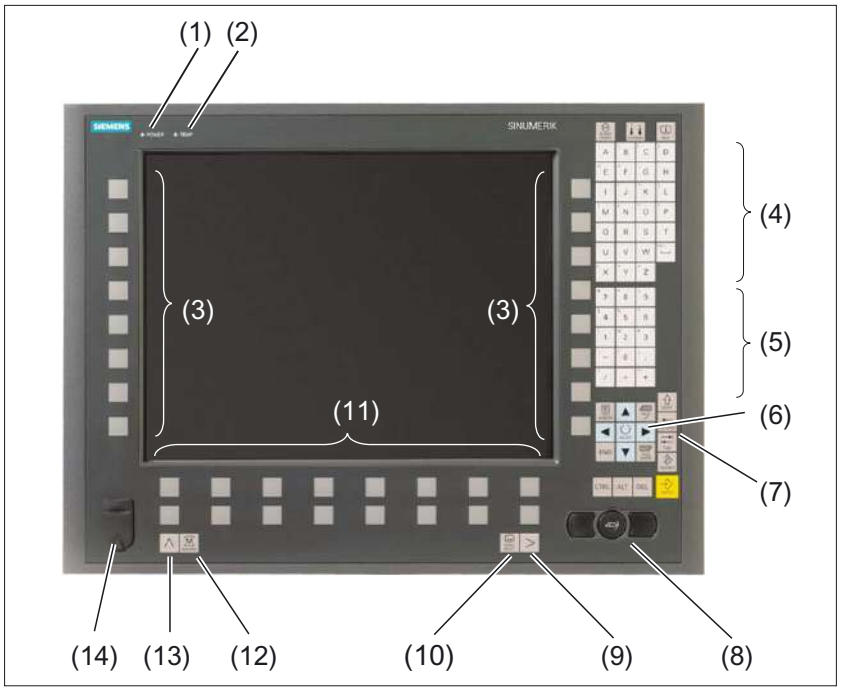

Figure 13-1 Front view of the TP 015AT operator panel front

(1) Status LED: POWER
(2) Status LED: TEMP
(illuminated LEDs indicate increased wear)
(3) Softkeys and direct keys
(4) Alphabetic key group
(5) Numeric key group
(6) Cursor key group
(7) Control key group
(8) Mouse
(9) Etc. key
(10) Area switchover
(11) Softkeys
(12) Machine area
(13) Recall
(14) Front USB interface

13.2.2 Operation

The operator panel front is operated by

- using the touch screen to select the application-specific functions, e.g. by touching one of the displayed buttons.
- Softkeys
- Keys
- Mouse

CAUTION
Do not touch the operating elements with pointed or hard objects. This may considerably reduce their service lives.

13.2.3 Keyboard and display

Keyboard

Several keys and key pads are installed on the operator panel front:

- The alphabetic key group contains the letters A - Z and the space character for entering text.
- The numeric key group contains the digits 0 – 9, the "–", "+", "=" characters, the slash "/", and the decimal point for entering numeric characters and operators.
- The cursor key group is used to navigate on the screen.
- The control key group includes special functions.
- The mouse comprises the actuation field (corresponds to the function of a tracker ball) and two mouse keys for navigation.
- The area switchover shows the area menu.
- The etc. key allows for an expansion of the horizontal softkey bar in the same menu.
- The softkeys call up functions that are available on screen via a menu bar.
- The machine area key switches directly into the "Machine" operating area.
- The recall key jumps back to the superordinate menu. One window is closed.

The key symbols used on the operator panel front appear below along with the corresponding function keys on the PC keyboard.

Key	Function corresponds to PC key function	Key	Function corresponds to PC key function
ALARM CANCEL	Esc	END	End
1...n CHANNEL	F11	BACKSPACE	Backspace
HELP	F12	TAB	Tab
␣	Space	SHIFT	(only intended for internal keyboard changeover)
NEXT WINDOW	Home	CTRL	Ctrl key
PAGE UP	Page up	ALT	Alt key
PAGE DOWN	Page down	DEL	Delete
▲	Cursor up	INSERT	Insert
◀	Cursor left	INPUT	Enter
▶	Cursor right	∧	F9
▼	Cursor down	MENU SELECT	F10
SELECT	5 (in numeric key group)	A, ..., Z	<Shift> A, ..., Z
>	<Shift> F9	M MACHINE	<Shift> F10

You will find information about softkeys in

- \BAD\ Operator's Guide HMI Advanced
- \BEM\ Operator's Guide HMI Embedded

Display

Note

Pixel error acc. to DIN EN ISO 13406-2 Class II.

13.2.4 Screen saver

If a screen with high contrast is displayed unchanged for longer than 1 hour, the screensaver must be activated (screen switched dark) to protect the TFT display from "burn-in" of the last displayed screen.

For more information see:

/BEM/: HMI Embedded Operator's Guide

/IAM/: IM2 Installation and Start-up HMI Embedded; IM4 Installation and Start-up HMI Advanced

CAUTION
You may do irreversible damage to your TFT display if the screen saver is not activated.

13.3 Interfaces

13.3.1 Overview

The TP 015AT operator panel front has the following interfaces:

Front

USB 1.1 to connect an external keyboard, mouse, or USB FlashDrive (see Fig.: "Front view of TP 015AT operator panel front" in Section: "Control and display elements" → "View")

Note

Note that the electromagnetic compatibility of commercially available peripheral devices operated via the USB port is usually rated for office use only.

For industrial use, components with a higher degree of certification are recommended.

Rear side

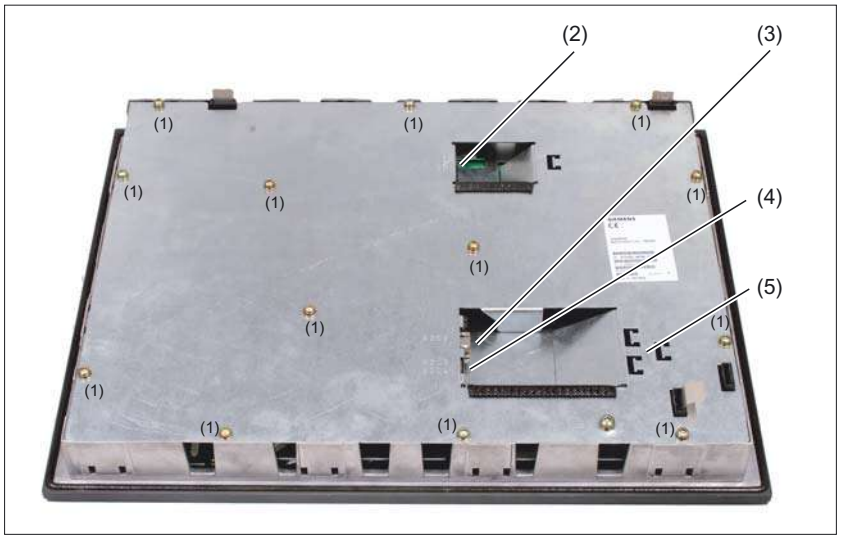

Figure 13-2 TP 015AT - Rear with interfaces

(1)		Blanking plate screws (M4)
(2)	X206	Power Supply
(3)	X202	Ethernet port
(4)	X203 / X204	USB interfaces
(5)		Strain relief for connecting cable

13.3.2 Description

Signal type

BI	Bi-directional
V	Supply voltage
O	Output
I	Input

Ethernet interface X202

Interface:	Ethernet
Connector designation:	X202
Type:	8-pole RJ45 socket
Cable length max.:	100 m (shielded twisted pair)

Pin	Name	Type	Meaning
1	TxD+	O	Transmit data +
2	TxD-		Transmit data -
3	RxD+	I	Receive data +
4/5	GND	-	terminated internally with 75 Ω; not required for data transmission
6	RxD -	I	Receive data -
7/8	GND	-	terminated internally with 75 Ω; not required for data transmission

Note

The direct keys are also led out through this interface.

USB interfaces

Front:

The USB interface on the front side of the operator panel front can be loaded with 500 mA.

Rear panel: X203 / X 204

Interface:	USB
Connector designation:	X203 / X204
Type:	2 x 4-way USB socket, type A (one of the interfaces can be loaded with 500 mA (high current), the other of the two, with 100 mA.)
Cable length max.:	Mouse, keyboard: 5 m if hub used: 3.5 m *)

*) Length incl. supply lead to hub and connected terminal unit; max. 1 hub permissible. Please note that some keyboards already include a hub.

Pin	USB port	Name	Type	Meaning
A1	2	USB_P5	V	+ 5V fused
A2	2	USB_1M	BI	Data-
A3	2	USB_1P		Data +
A4	2	USB_GND	V	Ground (reference potential)
B1	3	USB_P5		+ 5V fused
B2	3	USB_2M	BI	Data-
B3	3	USB_2P		Data +
B4	3	USB_GND	V	Ground (reference potential)

Power supply X206

The pin assignment of this interface can be found in Section: "Connection conditions" →"Secondary electrical conditions" → "Pin assignments of the interfaces".

13.4 Assembly

13.4.1 Mounting

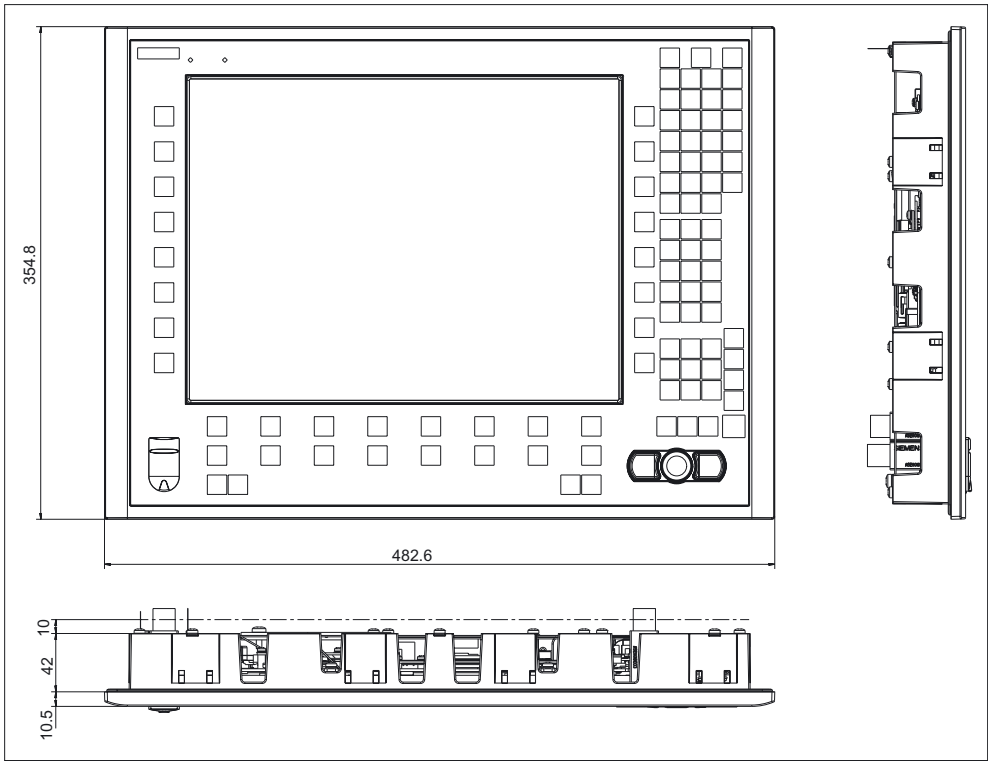

Figure 13-3 TP 015AT with TCU (integrated)

Thanks to the tension jacks on the TP 015AT, drill-holes or screw holes are not needed.

This retaining method also affords a degree of protection IP65 (but only in conjunction with a circumferential seal and when the protective USB cap is fitted).

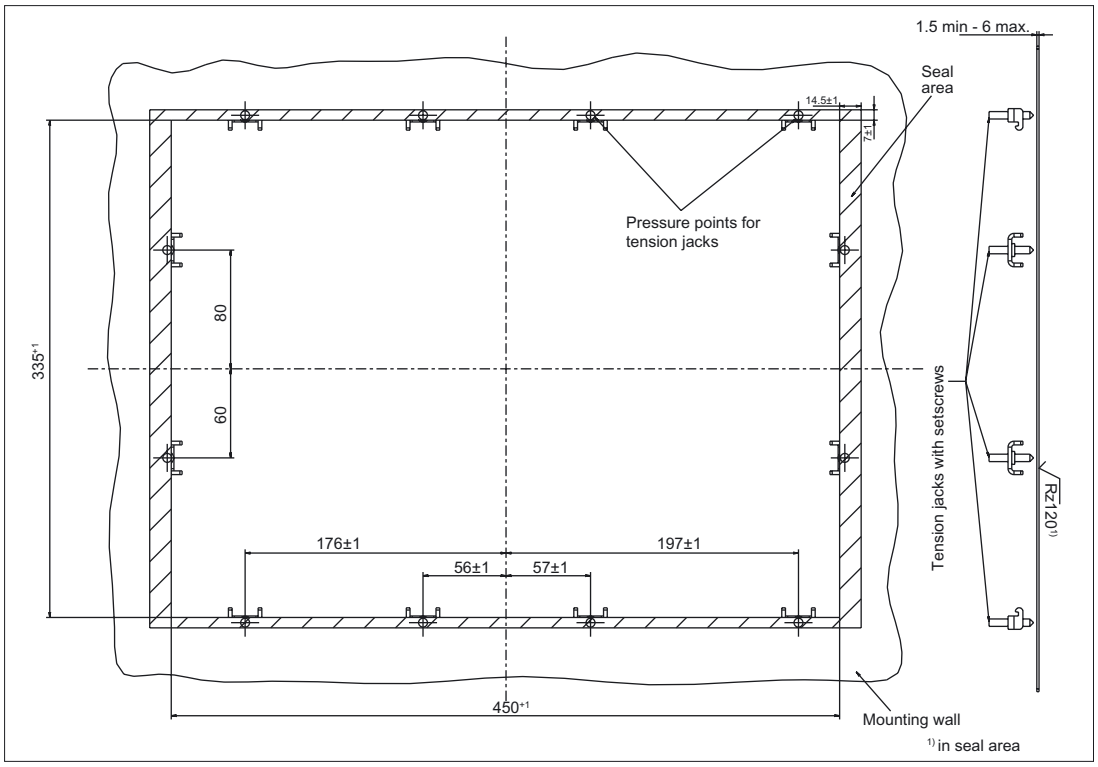

Figure 13-4 Dimension sheet for installing the TP 015AT operator panel front

13.4.2 Touchscreen calibration

Whenever a new operator panel front is connected the touchscreen must be calibrated.

Procedure

For a description of calibration, refer to Chapter: "PCU 50.3", section: "Start-up" → "Calibration of the touch screen".

13.4.3 Softkey labeling

User-specific functions can be assigned to the horizontal and vertical softkey bars. Printed labeling strips can be used to label the softkeys.

Blank labels are already installed on delivery.

To make the vertical labels, DIN-A4 film is available (Order No., see Section: "Spare parts").

Note

Use the "Arial" font to format text. This font is comparable to the "Univers S57" font, used by Siemens for the key labeling.

Proceed as follows

1. Letter the mat side of the film using a laser printer.
2. Cut the printed labels along the preprinted lines.
3. Insert the labeling strips into the slits provided at the rear of the operator panel front (refer to Fig.: "TP 015AT Housing open" in Section: "Spare parts" → "Replacement").

13.5 Technical data

Safety			
Safety class	III; PELV acc. to EN 50178		
Degree of protection to EN 60529	Front: IP65	Rear side: IP00	
Certificates and approvals	CE / cULus		
Electrical data			
Power Supply	24 V DC		
Current input	Typical, approx. 0.9 A	Max. approx. 1.5 A	
Power consumption	Typical, approx. 22 W	Maximum approx. 36 W	
Mechanical data			
Dimensions	Width: 483 mm Height: 355 mm Depth: 53 mm	Mounting depth: 42 mm	
Weight	Approx. 7.6 kg		
Tightening torques, max.	Tension jack screws: 0.5 Nm	M3 screws: 0.8 Nm	M4 screws: 1.8 Nm
Mechanical ambient conditions	**Operation**	**Transport** (in transport packaging)	
Vibration stressing	10 – 58 Hz: 0.074 mm 58 – 200 Hz: 1g	5 – 9 Hz: 3.1 mm 9 – 200 Hz: 1g	
Shock stressing	5 g, 30 ms, 18 shocks	30 g, 6 ms, 18 shocks	
Climatic environmental conditions			
Cooling	By natural convection		
Condensation, spraying water and icing	Not permitted		
Air inlet	Without caustic gases, dusts and oils		
	Operation	**Storage/shipping** (in transport packaging)	
Applicable standards	EN 60721-3-3	EN 60721-3-1 / -3-2	
Climate class	3K5	1K3 / 2K4	
Temperature limits	0 ... 45 ºC (at front) 0 ... 55 ºC (at rear)	-20 ... 60 ºC (cyclic)	
Temperature change	Max. 10 K/h	Max. 18 K/h	
Limits for relative humidity	5 ... 65% (annual average)	10 ... 95% at 25°C	
Permissible change in the relative air humidity	Max. 6%/h		
Display			
Size / resolution	15 " TFT / 1024 x 768 pixels		
MTBF backlight	typ. 50 000 h at 25 ºC (dependent on the temperature)		

13.6 Spare parts

13.6.1 Overview

The diagram shows the TP 015AT operator panel front disassembled into its individual parts. The components provided with an order number are available as individual spare parts.

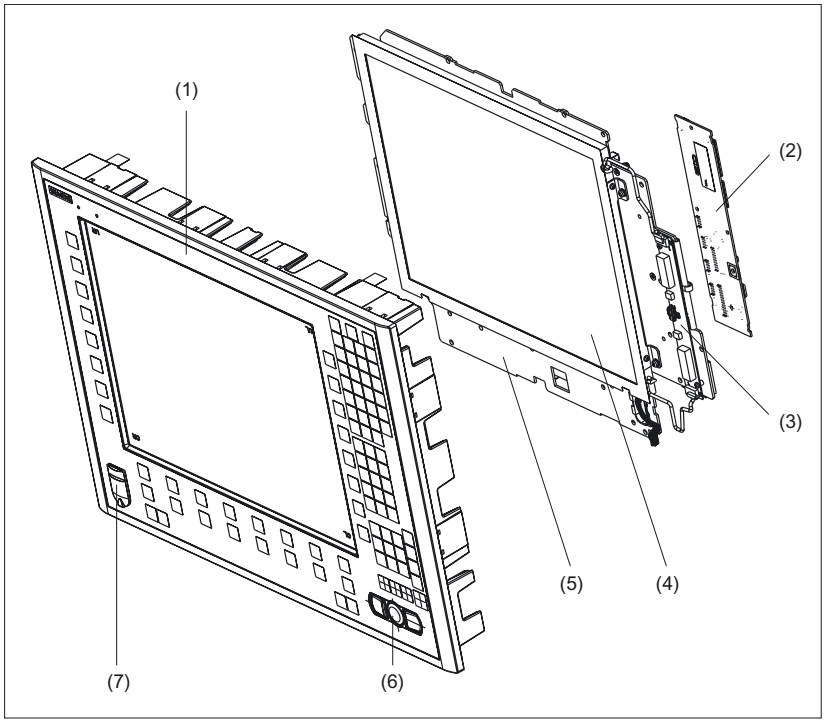

Figure 13-5 Individual parts for the TP 015AT operator panel front

	Spare parts	Order No.:	Comment
(1)	Operator panel front	6FC5248-0AF17-0AB0	Without LCD unit, mouse, USB port and keyboard controller
(2)	Keyboard controller		
(3)	Background lighting with backlight inverter		
(4)	LCD unit		
(5)	Display support		
	Spare parts	**Order No.:**	**Comment**
(6)	USB mouse	6FC5247-0AF01-0AA0	
(7)	Cap for the USB port	6FC5248-0AF05-0AA0	Set of 10
	Tension jacks	6FC5248-0AF14-0AA0	Set of 9
	Slide-in labels *) (DIN A4 films)	6FC5248-0AF24-0AA0	Set of 3

*) The dimensions for production of film slide-in labels for softkey labeling can be seen in the following diagram.

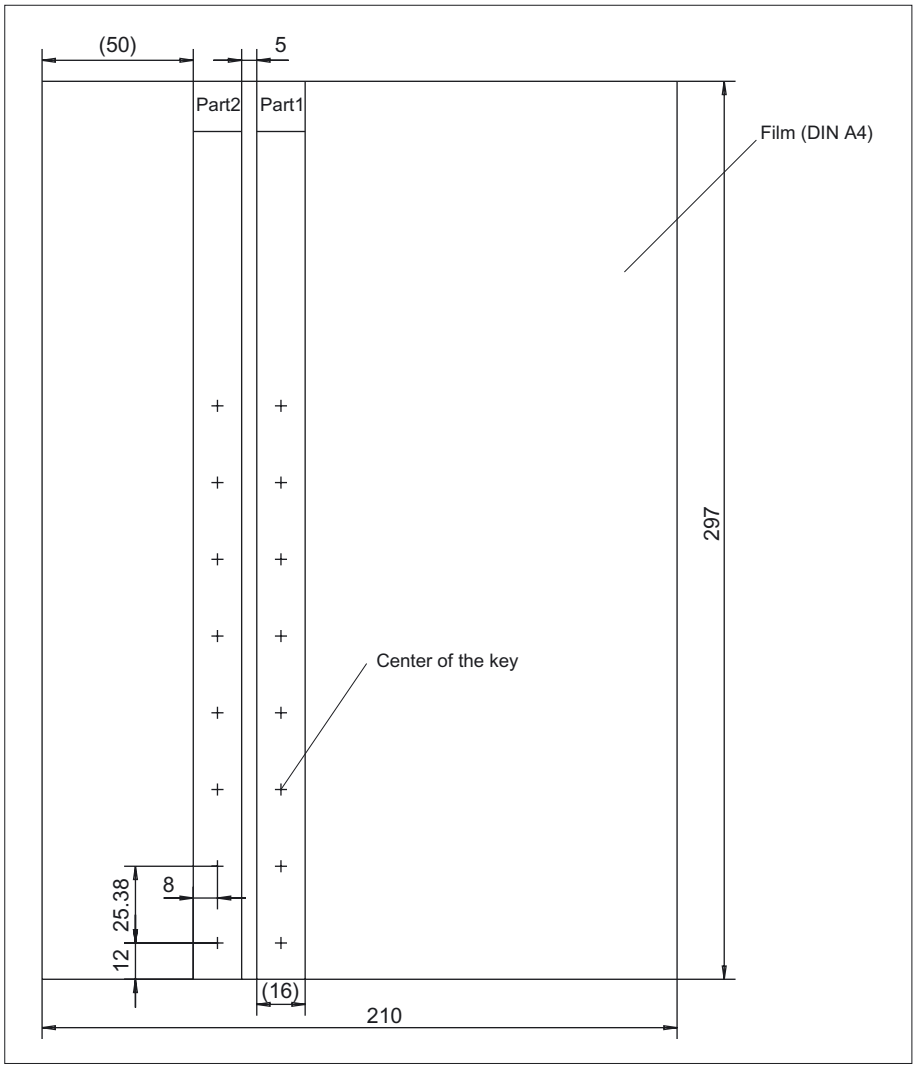

Figure 13-6 Dimensions for vertical slide-in labels

13.6.2 Replacement

CAUTION
Parts must only be replaced by trained personnel (danger of damage to sensitive components due to static electricity)!

USB cap / tension jack

The replacement of the USB sealing cap and tension jacks will not be described since it is simple and self-explanatory.

Operator panel front

When the operator panel front is replaced, the display, keyboard controller, touch controller, mouse and USB port can be used again. They are therefore disassembled and re-assembled after the front panel has been replaced.

Note

We recommend that the keypad controller be re-used so that the control parameters that have been programmed-in are not lost.

Dismounting individual parts from the operator panel front

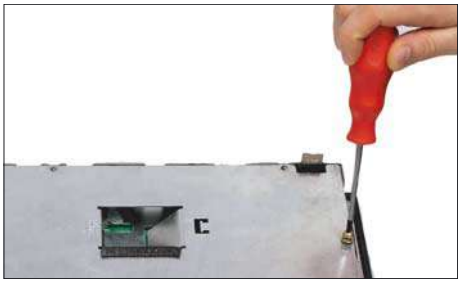

1. Place the TP 015AT on a soft horizontal surface. Remove the 13 casing screws (see also figure "TP 015AT rear view with interfaces" in Section: "Interfaces" → "Overview")
2. Lift off the cover.

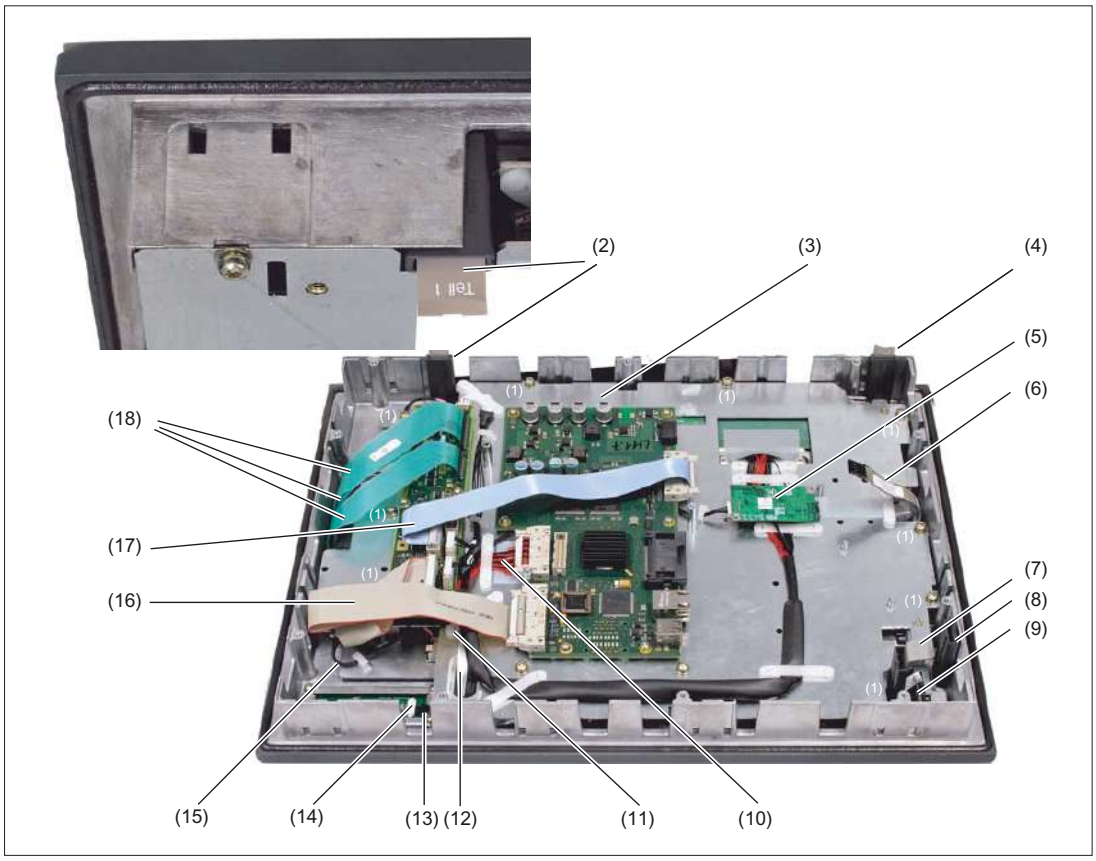

Figure 13-7 TP015AT housing opened

(1) Screws (M4) for display support
(2) Slide-in strips (Part1)
(3) Display support
(4) Slide-in strips (Part2)
(5) Touch controller
(6) Cable of the touch controller
(7) Slide-in strips (Part4)
(8) Slide-in strips (Part3)
(9) USB interface
(10) Display cable
(11) Retainer for the mouse / keyboard controller cable
(12) Ribbon cable for keyboard controller / USB port
(13) Port for the mouse
(14) Cable plug for mouse / keyboard controller
(15) Backlight inverter cable
(16) I/O USB cable
(17) Direct key cable
(18) Keyboard cable

Touch controller

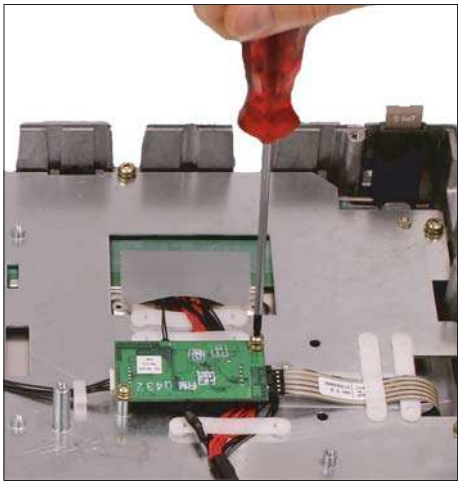

3. Remove the screws (M3) that are holding the touch controller to the display support. Do this with a TX10 screwdriver.

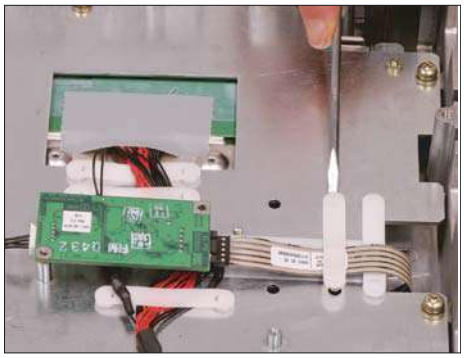

4. Remove the retainer of the touch screen/touch controller cable with a flat screwdriver.

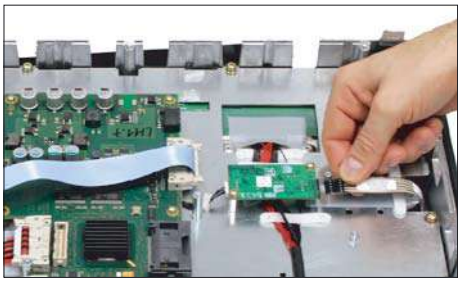

5. Remove the plug connectors from the touch controller by pushing in the retaining lug.

Backlight inverter cable



6. Remove the two cables to the backlight inverter (to the left and right of the display support) by raising the clips with a flat screwdriver and pulling out the cables.

Connection of keyboard controller / mouse

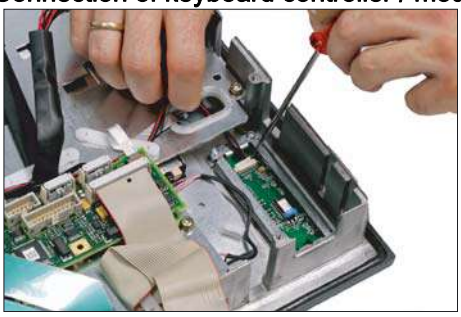

7. Disconnect the connection from the keyboard controller to the mouse by carefully pushing the plug back with a screwdriver.

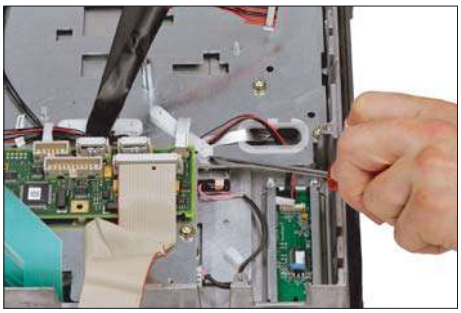

8. Remove the retainer for the cable from the keyboard controller to the mouse.

Connection of keyboard controller / USB port

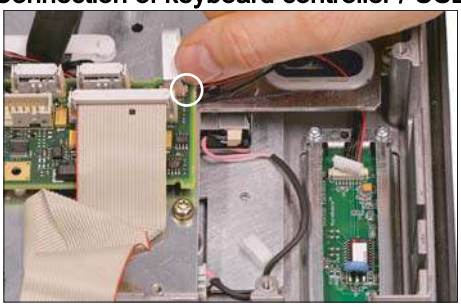

9. Disconnect the connection from the USB port to the keyboard controller by pulling back the terminal clamps to the left and right of the plug.

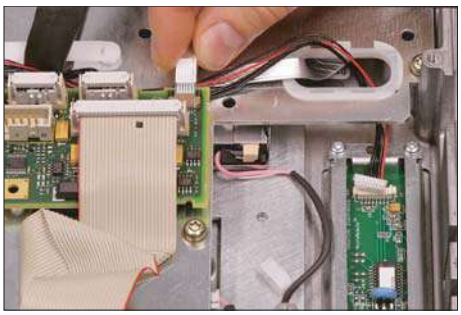

10. Remove the plug of the USB cable from the keyboard controller.

Keyboard cable

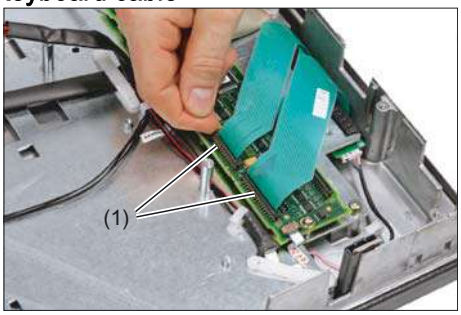

11. Disconnect the 3 keyboard cables by pushing up the terminal holders (1) on the keyboard controller and pulling the keyboard cables from the bracket.

    For detailed information about removal and insertion of membrane connectors, see also chapter: "Connection conditions" → "Handling membrane connectors".

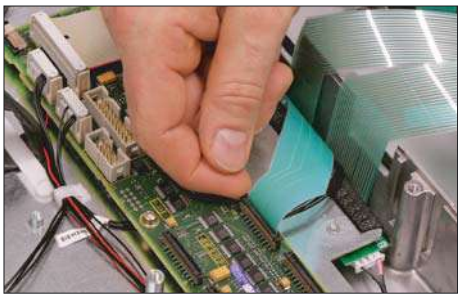

Display support

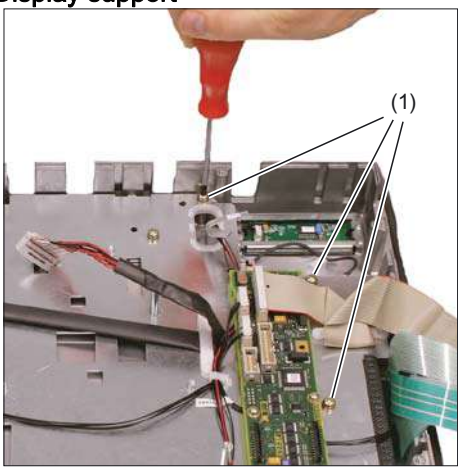

12. Remove the 12 screws (1) from the display support.
    For the arrangement of the screws on the display support, refer to figure: "TP 015AT housing open".

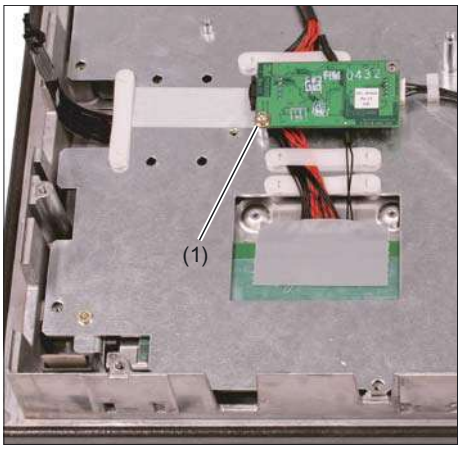

13. Before removing the display support, secure the touch controller with a screw (1) that you tighten by hand.
This ensures that the touch controller is protected when storing the display support. Otherwise, the touch controller could get squeezed or damaged, thus rendering it inoperable.

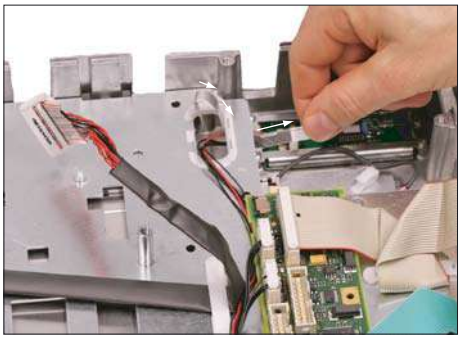

14. Insert the USB ribbon cable in the direction of the arrow through the opening and pull it out.
Lift off the display support.

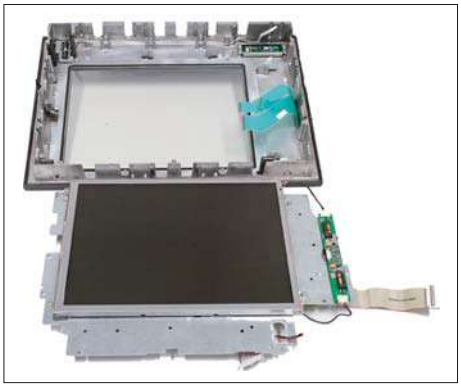

15. Place the display support on its back side to avoid damaging the display.

USB board



16. Remove the USB port by sliding up both retaining clamps and pulling out the board.

Mouse board

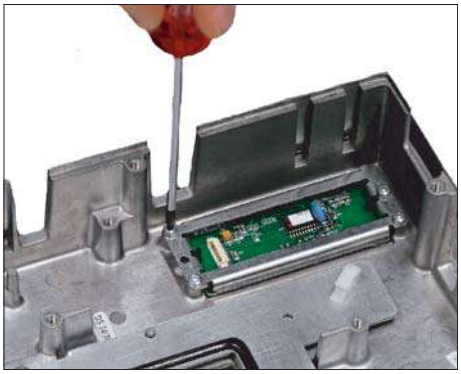

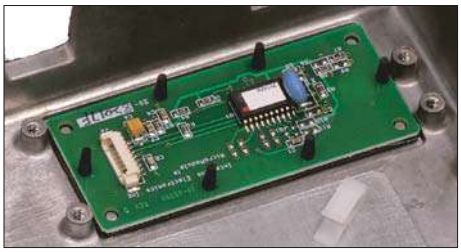

17. Loosen the 4 screws (M3) on the bracket for the mouse board. Lift off both the bracket and the mouse board.

Installing the individual parts in the operator panel front

1. Remove the transportation safety precautions (adhesive strip for securing cables) and the screen protective sheeting from the inside.
2. Install the components in the new operator panel front in the order indicated:

17. Mouse board and bracket

16. USB board

Press the USB board into place until you hear it lock into the retaining clamps.

Check the secured position of the USB cable behind the guide pins.

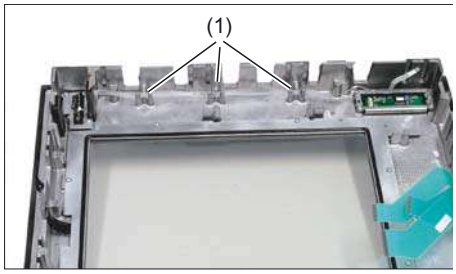

15. - 12. Display support

14. Bend the keyboard cables (1) back slightly before inserting the display support.
Otherwise, the keyboard cables could become squeezed or damaged, thus rendering them inoperable.

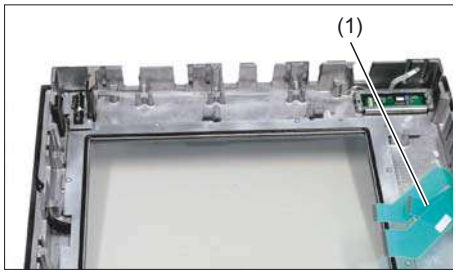

Insert the USB ribbon cable against the direction of the arrow through the opening and pull it out.

11. Keyboard cable

10. - 9. Connection of keyboard controller / USB port

10. Ensure that the contact side (1) of the USB plug faces up.

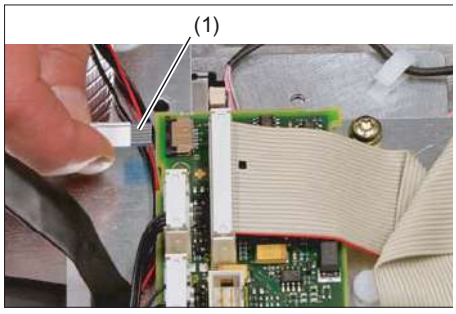

8. - 7. Connection of keyboard controller / mouse

6. Backlight inverter cable

5. - 3. Touch controller

2. - 1. Cover

Note

Pay attention to the torques when tightening the screws (see section: "Technical specifications").

Operator panel 15" TFT with VLE

14

14.1 Description

14.1.1 Validity

The following description applies to the following components:

Description	Properties	Order No.:
SINUMERIK operator panel front 15" TFT, width 416 mm, with mech. buttons with a videolink receiver	For integrated installation	6FC5203-0AF50-0AA0
	For distributed installation up to 10 m	6FC5203-0AF50-1AA0
	For distributed installation up to 20 m	6FC5203-0AF50-2AA0
SINUMERIK 810D/840D machine control panel, 416 mm wide	Variant *Milling*, mech. keys, rapid traverse and feed override, mouse, standard / US layout	6FC5203-0AF50-3AA0
	Variant *Turning*, mech. keys, handwheel and feed override, mouse, standard / US layout	6FC5203-0AF50-4AA0
SINUMERIK operator panel front, videolink transmitter for distributed installation	1 – 10 m	6FC5247-0AF20-0AA0
	1 – 20 m	6FC5247-0AF21-0AA0
SINUMERIK 810D / 840D mounting bracket for mounting PCU and Videolink transmitter for distributed configuration	Flat mounting	6FC5248-0AF20-0AA0
	Upright mounting	6FC5247-0AF20-1AA0
SINUMERIK 810D/840D mounting bracket	Mounting of PCU behind operator panel front	6FC5247-0AF20-2AA0
Videolink cable for connection between display unit and Videolink transmitter with detachable connection housing	10 m	6FX2002-1VL01-1BA0[1])
	15 m	6FX2002-1VL00-1BF0[1])
	20 m	6FX2002-1VL00-1CA0[1])

[1]) ...-1XX0: XX is the length code: A = 0, B = 1, etc.

14.1.2 Overview

The 15" TFT operator panel (416 mm wide) comprises

- an operator panel front with preassembled videolink receiver,
- a machine control panel (MCP) with CNC keyboard (QWERTY) with integrated mouse.

The PCU belonging to the overall system (see Section: "Operating and Display Elements" → "View of Function Blocks") is mounted separately from the operator panel (distributed configuration).

CAUTION
The PCU should not be mounted in the "air flow downward" position (i.e. the interfaces at the top) to prevent heat accumulation.

Communication is implemented between the NC controller and PCU, operator panel front and MCP using MPI, USB and videolink transmission technology (see Section: "Control and Display Elements" --> "View of Function Blocks").

Note

Where the Windows NT operating system is used, the USB interface only supports keyboards and mouse units.

If other USB devices are used, the noise immunity of the entire system may be reduced. The end user takes responsibility for the use of such devices.

The operator panel front consists of a 15" display with horizontal and vertical softkeys (in the form of short-stroke keys) with preinstalled videolink receiver.

In the case of turning and milling technologies, the MCP keys are labeled differently, the displays on the operator panel front are different and a handwheel instead of the second override switch is provided for the turning variant.

14.1.3 System Features

Operator panel

The operator panel (see Section: "Control and Display Elements" --> "View of Function Blocks") consists of

- an operator panel front with integrated operator control functions in the form of vertical and horizontal softkeys and a preinstalled videolink receiver, and
- a machine control panel with integrated CNC keyboard

Communication

Since the PCU is installed physically separated from the operator panel (distributed configuration), a data transmission path has been created:

- The operator panel (operator panel front + MCP) communicates with the PCU via a cable and a videolink transmitter. The image data is transmitted by means of videolink technology and the keyboard data by USB technology.

  As a result, the PCU and operator panel can be installed up to 20 m apart (XGA resolution).
- The NC and MCP functions on the operator panel communicate via MPI.
- NC and PCU also communicate by means of MPI.
- Only TFT displays (12" and 15") are supported
- Hardware support for USB only for Version 1.1 and earlier

EMERGENCY STOP key

There is an EMERGENCY STOP button on the operator panel. This also has to be wired up (see Fig: "Block diagram of emergency stop button", paragraph: "Mechanical Design" → "Machine Control Panels")

Power Supply

The operator panel and PCU must be supplied with 24V.

Note

To prevent error messages when the PCU is booted, the operator panel front and PCU should be switched on **simultaneously** using the 24V supply.

14.1.4 Mechanical design

14.1.4.1 Operator panel front

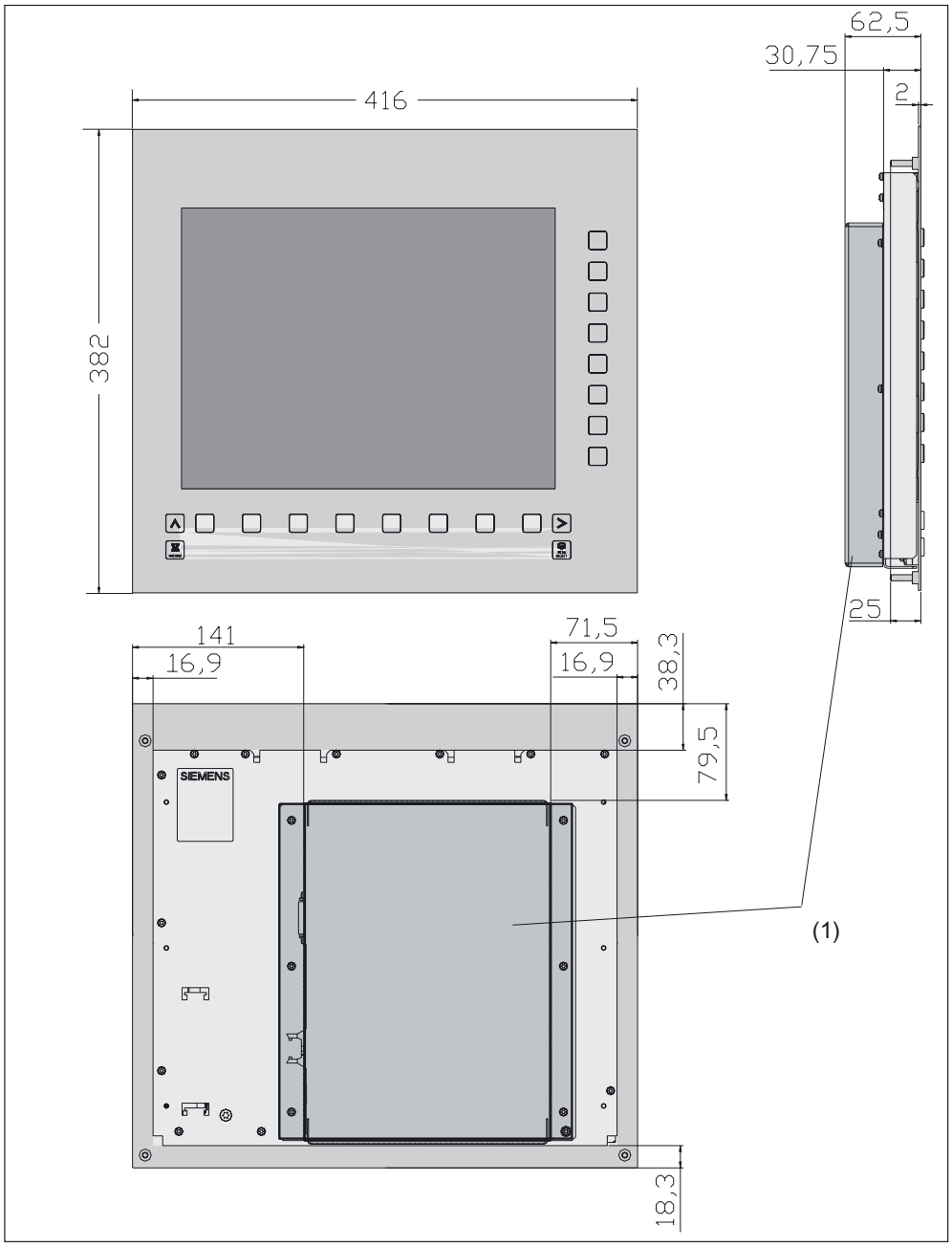

Figure 14-1 Front, side and rear views

(1) Video link receiver

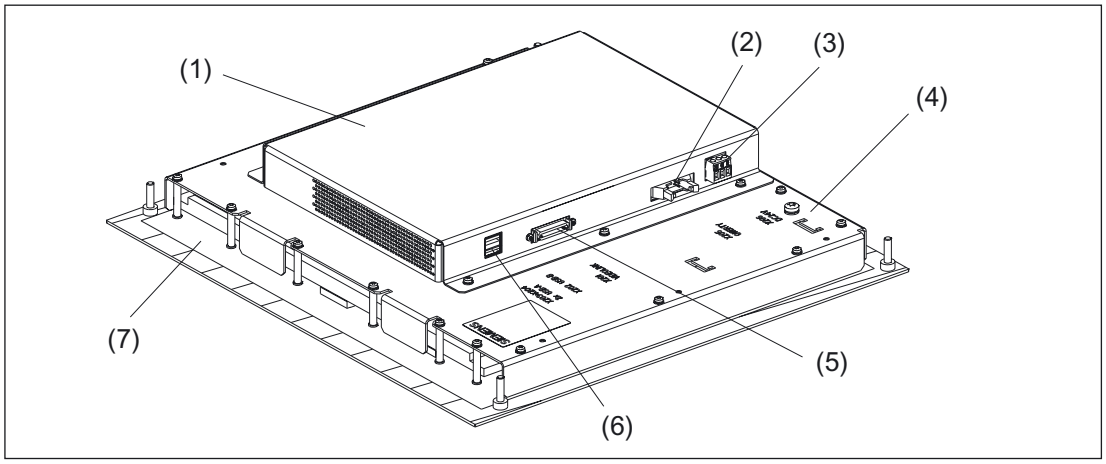

Figure 14-2 Rear view of the operator panel front with premounted videolink receiver

(1) Video link receiver
(2) Keyboard interface
(3) Power Supply
(4) Supporting plate
(5) Sockets for video link cables
(6) 2x USB-A
(7) Operator panel front

14.1.4.2 Machine control panels

Milling MCP

Front and side view

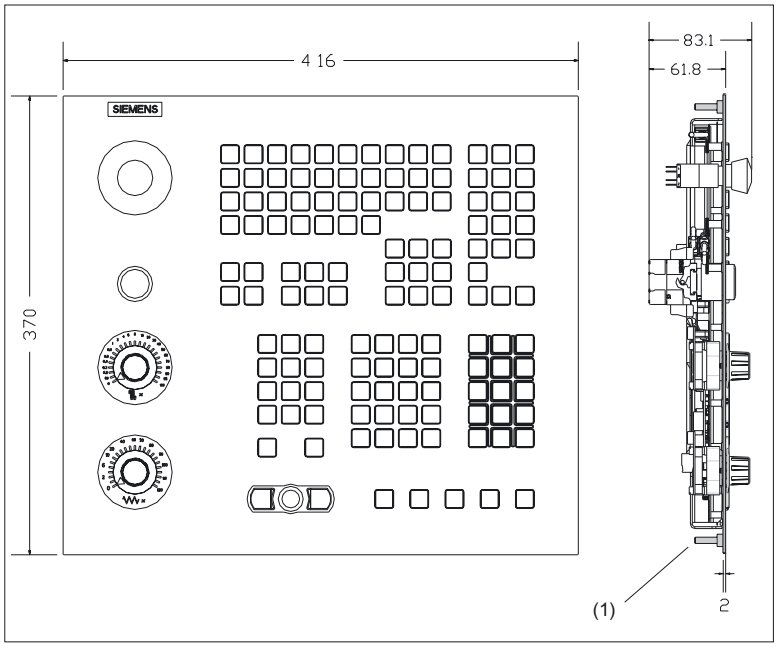

Figure 14-3 "Milling" MCP

(1) Threaded bolt M5 (for detailed view, see "Threaded Bolts")

The following figure shows the rear view of the milling MCP and the turning MCP with the position of the connections, the S3 programming switch and the status LEDs H1 to H4

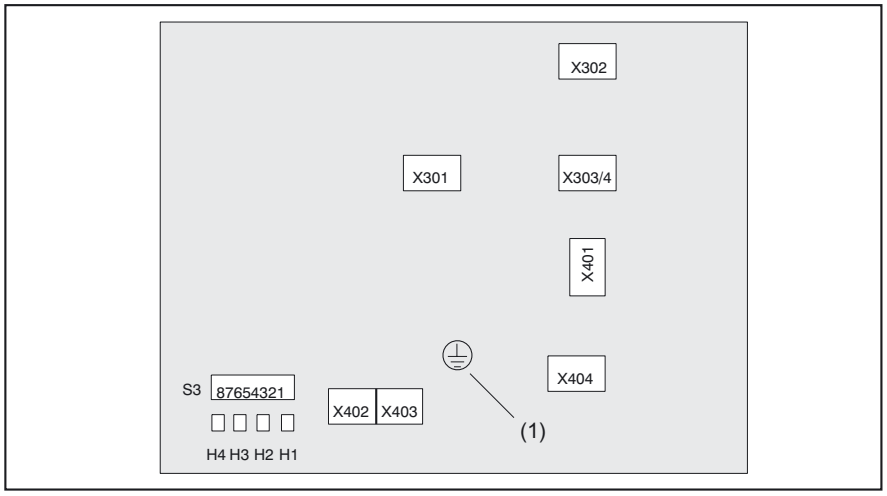

Figure 14-4 Rear view of the milling MCP and turning MCP

(1) Ground connection (M5 threads)

The meaning of the status LEDs and assignment of DIP-fix switch S3 is given in the tables below.

Table 14-1 Meaning of status LEDs

No.	Color	Meaning
H1	Red	Hardware faults
H2	Red	Temperature error
H3	Green	Power OK
H4	yellow	Interface operator panel front active

Table 14-2 Assignment of DIP Fix switch S3

1	2	3	4	5	6	7	8	Meaning / value	Meaning / value
								Baud rate	
On Off								1.5 MBaud 187.5 kBaud	
								Transmission cycle time	Reception monitoring
	on off off	off on off						200 ms 100 ms 50 ms	2400 ms 1200 ms 600 ms
								Bus address	
			off	off	off	Off		0	
						on		1	
					on	Off		2	
						on		3	
				on	off	Off		4	
						on		5	
					on	Off		6	
						on		7	
			on	off	off	Off		8	
						on		9	
					on	Off		10	
						on		11	
				on	off	Off		12	
						on		13	
					on	Off		14	
						on		15	
							On Off	Interface MPI customer operator panel Series HW	

Threaded bolt

Welded threaded bolts are used instead of drill holes with press-in sleeves to secure the operator panel front and the MCP.

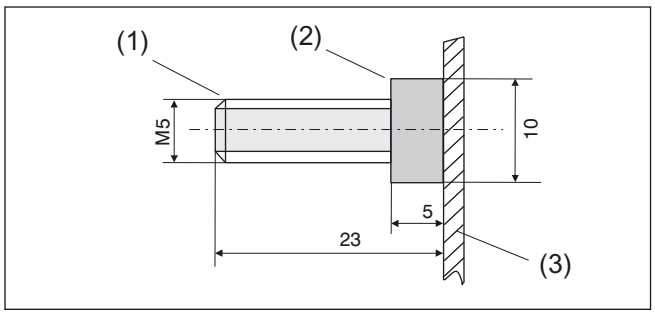

Figure 14-5 Bolt for securing operator panel front and MCP

(1) Threaded bolt M5
(2) Spacer ring
(3) Front panel

EMERGENCY STOP key

The emergency stop key wiring is shown in the block diagram below.

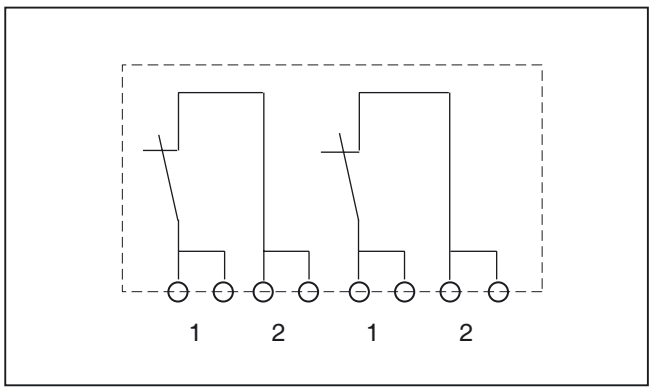

Figure 14-6 Block diagram of emergency stop button

Turning MCP

The turning MCP only differs from the milling MCP by

- a handwheel in place of the second override switch and
- different keys

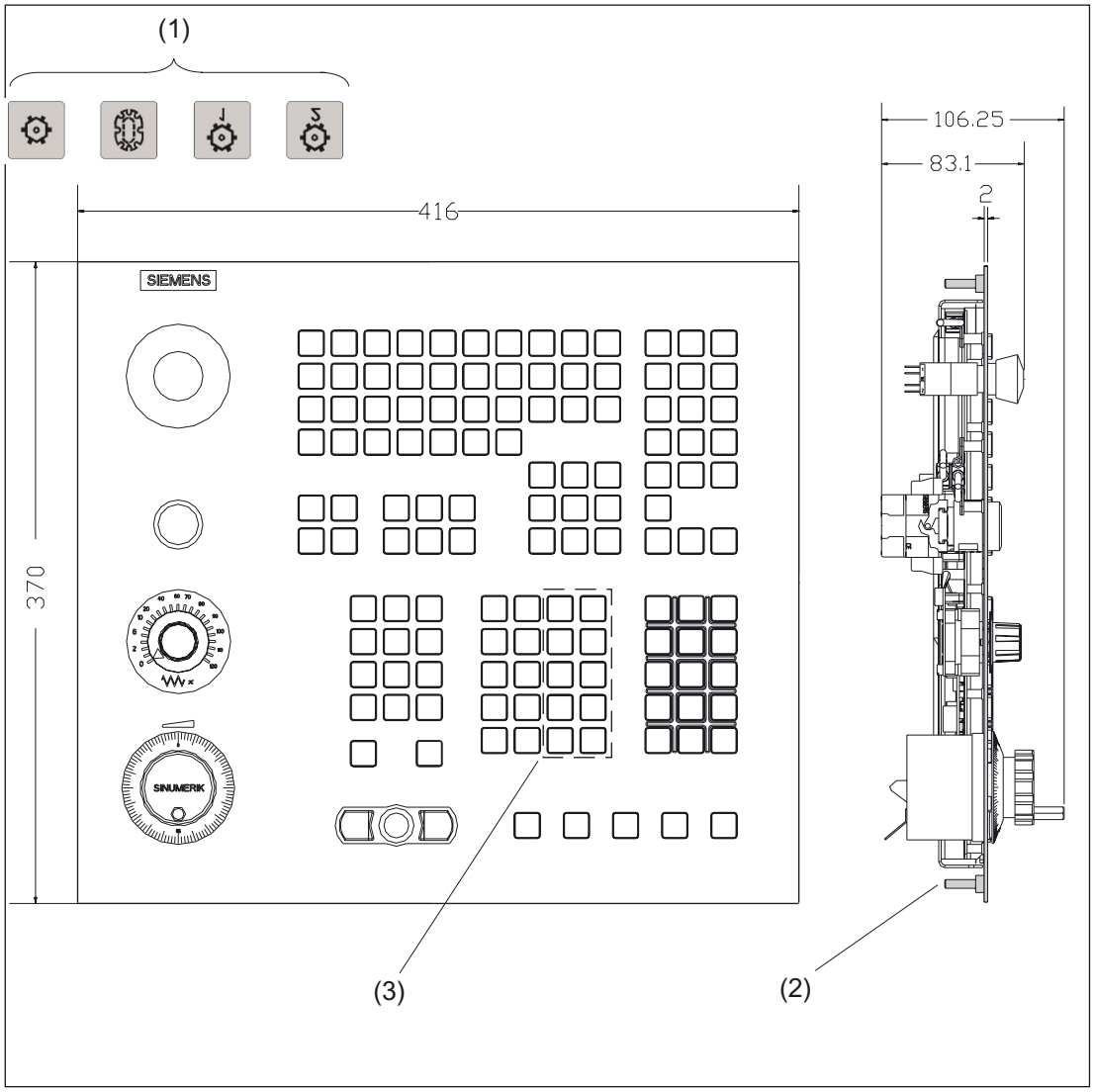

Figure 14-7 "Turning" MCP

(1) Exchangeable keys
(2) Threaded bolt M5 (for detailed view, see "Threaded Bolts")
(3) Exchangeable key caps

14.1.4.3 Videolink transmitter

PCU 50 with attached videolink transmitter

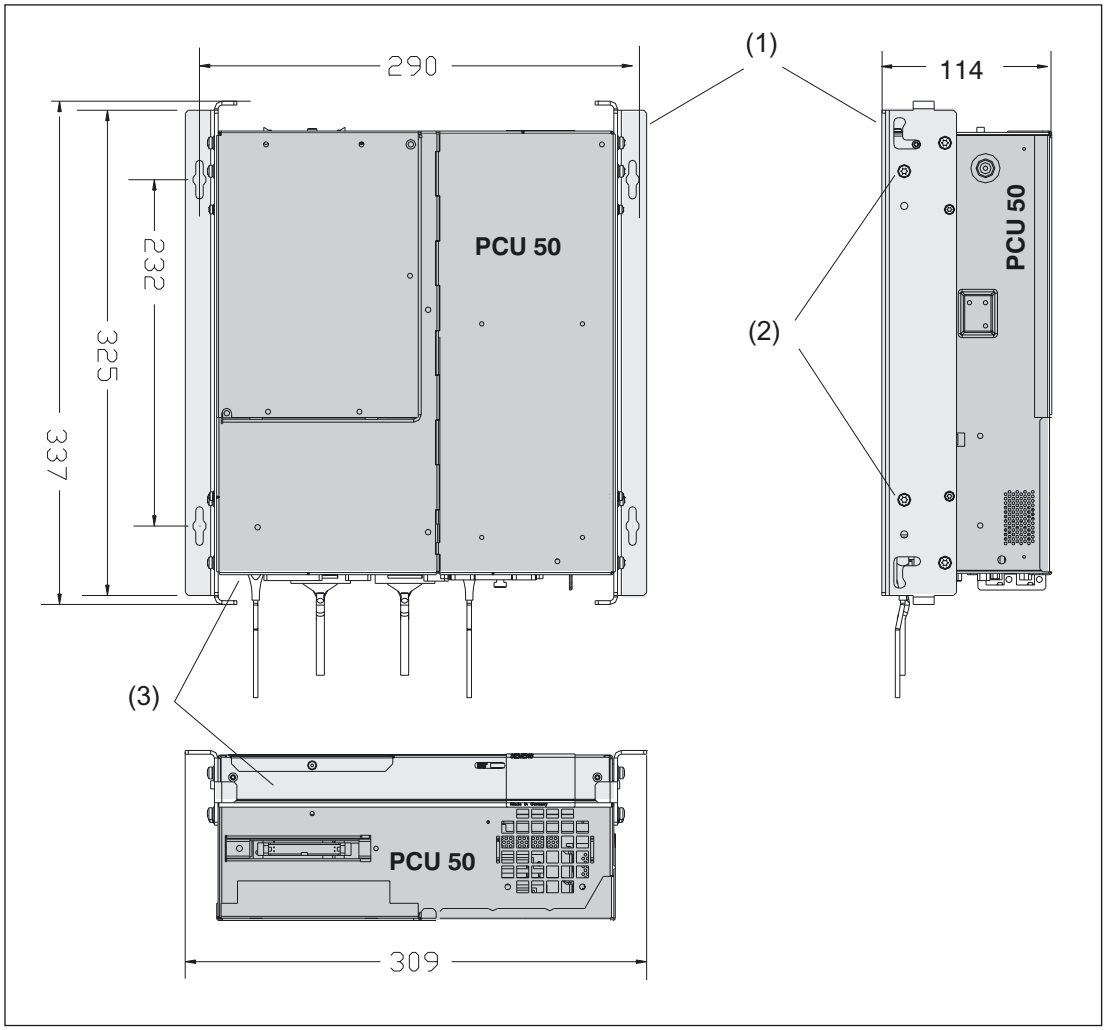

(1) Mounting bracket
(2) Mounting screws for the video link transmitter
(3) Videolink transmitter

You can find the mounting instructions in the section: "Mounting" → "Videolink transmitter".

14.1.4.4 Cable

1. **Video link cable**
   - 10 m: Order No. 6FX2002-1VL01-1BA0
   - 15 m: Order No. 6FX2002-1VL00-1BF0
   - 20 m: Order No. 6FX2002-1VL00-1CA0
2. **MPI cable**
   - MPI/PROFIBUS cable (cut-to-length) and connector from Siemens
3. **USB connection cable between X205 (operator panel front) and X301 (MCP):**
   - 10-pole ribbon cable with fitted socket connectors (supplied with operator panel front)

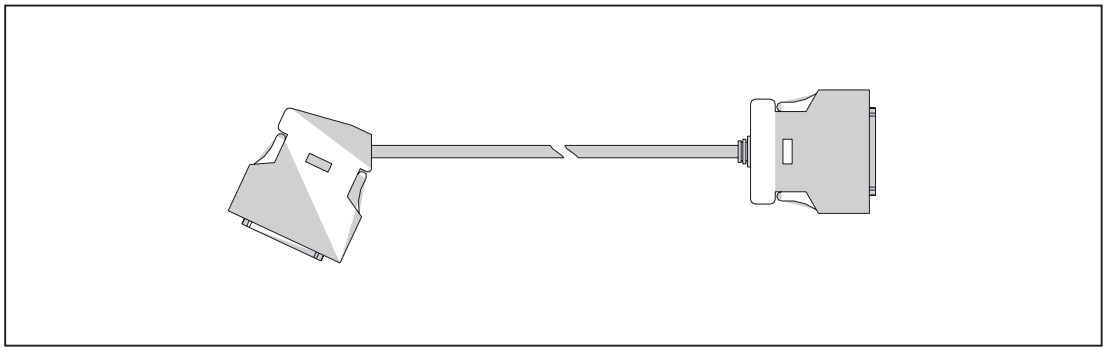

Figure 14-8 Video link cable

14.2 Operator controls and indicators

14.2.1 View of function blocks

The entire system is shown in the schematic diagram in the figure.

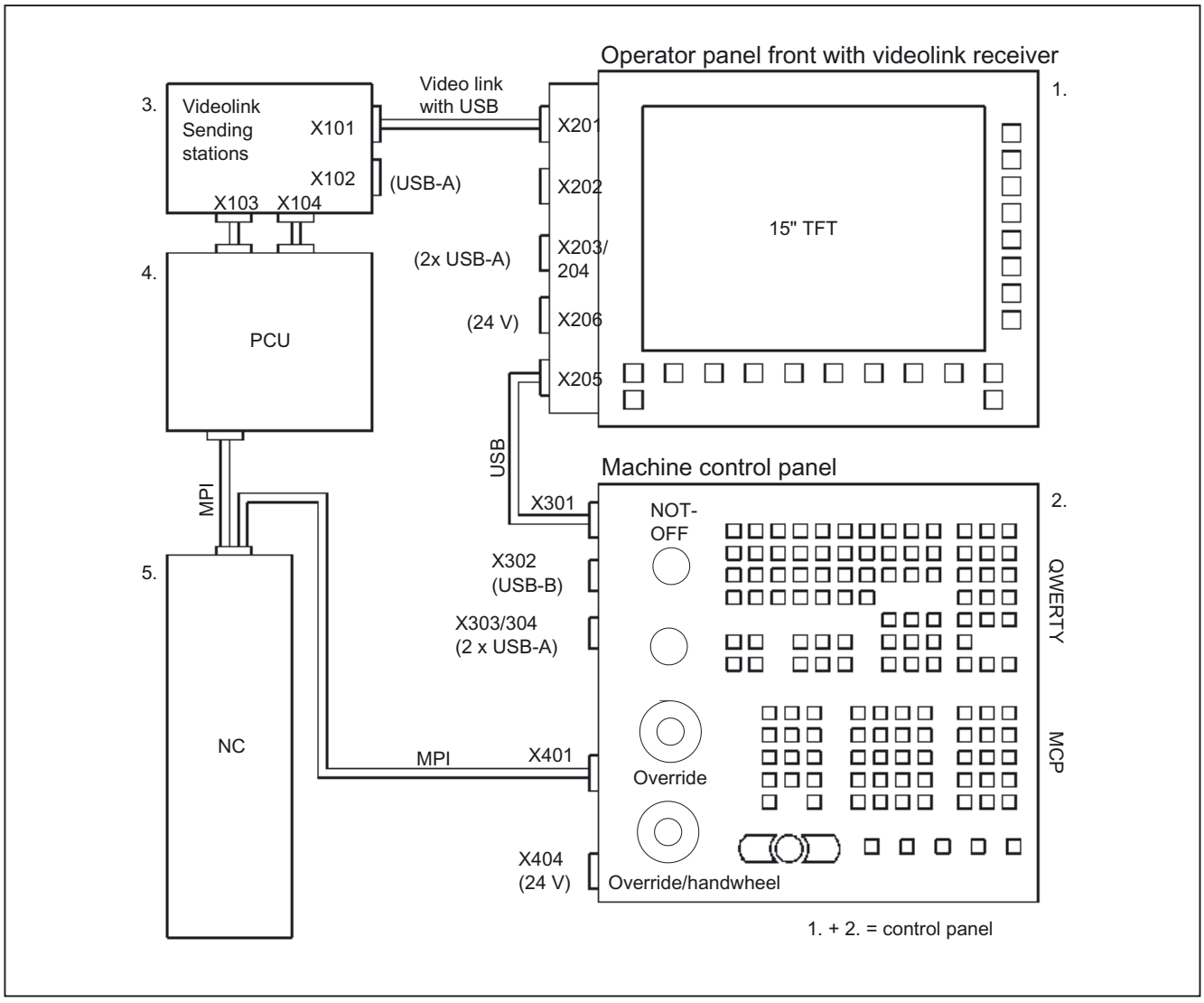

Figure 14-9 Function blocks of SINUMERIK operator panel 15" TFT (width 416 mm)

1. Operator panel front with videolink receiver behind the operator panel front (not visible in the figure)
2. MCP with QWERTY keyboard and machine control panel (MCP)
3. Videolink transmitter
4. PCU
5. NC unit

Function blocks 1 to 3 are the subject of this hardware description.

14.2.2 Description of the function blocks

14.2.2.1 Operator panel front

• Resolution:	XGA (1024x768 pixels), 15" TFT
• Control elements:	Horizontal and vertical softkeys
• Interfaces:	Inputs: - 1 x videolink MDR 36 - 1 x USB B - 1 x 24V power supply, 3-pole terminal Outputs: - 1 x plug connector 2x5-pole with interlock - 2 x USB-A
• Dimensions:	WxHxD (in mm): 416 x 382 x 65
• Edge of support:	Top/bottom: 18 mm Right/left: 16 mm
• Attachment:	Four welded-on threaded bolts M5
• Seal:	To be provided by customer
• Degree of protection:	Max. IP54 at front / IP00 at rear

14.2.2.2 Machine control panel for turning and milling

1. **QWERTY keyboard area**

   The QWERTY keyboard features:
   - MF2 keyboard (without function keys)
   - Operating area keys: MACHINE, PROGRAM, OFFSET, PROGRAM MANAGER, ALARM and CUSTOM
   - Other keys: ALARM CANCEL, HELP, GROUP CHANNEL, INSERT, SELECT and NEXT WINDOW
   - Integrated mouse

2. **MCP area**

   The MCP features:
   - 54 keys (technology-specific and manufacturer-specific)
   - Turning:
     – 1 x feed override (0 - 120%, 23 latched positions)
     – 1 x handwheel (100 pulses/revolution), approx. 60 mm wheel diameter
   - Milling:
     – 1 x feed override (0 - 120 %, 23 latched positions)
     – 1 x rapid traverse override (0 -100%, 23 latched positions)

3. **Other components of the machine control panel**
   - 1 x emergency stop button, 2-channel (small)
   - 1 x illuminated pushbutton, machine 'ON' (22 mm system)

4. **Interfaces**
   - Inputs:
     – 1 x plug connector (2x5-pole) with lock
     – 1 x USB B 2
     – 1 x MPI interface, Sub-D, 9-pole
     – 1 x 24V power supply: terminal (3-pole)
   - Outputs:
     – 2x USB-A
     – 2 x 4-pole (reserved for optional interfaces, not equipped in series production)

5. **Dimensions**
   - W x H x D (mm): 416 x 370 x 107 (turning) / 84 (milling)

6. **Mounting**
   - Four welded-on threaded bolts M5

7. **Seal**
   - To be provided by customer

8. **Degree of protection**
   - Max. IP54 at front, IP00 at rear

14.2.2.3 Videolink transmitter

1. **Videolink transmitter 1 ... 10 m**
   - Function: Transmitter module for video transmission
   - Interfaces:
     - Inputs:

       1 x plug connector (20-pole) with lock

       1 x plug connector (26-pole) with lock
     - Outputs:

       1 x videolink MDR 36 for 1, ..., 10 m (max. 20 m) (video data plus USB signals)

       1 x USB A

2. **Videolink transmitter 1 ... 20 m**
   - Function: As above, plus ExtremeUSB for 20 m and branch for second operator panel front with videolink output for 1 to 20 m
   - Interfaces:
     - Outputs

       2 x videolink MDR 36 for 1, ..., 15 m (max. 20 m)

       2x USB-A

14.2.2.4 Internal operating displays (LEDs)

The following tables give an overview of the LEDs for indicating the operating statuses of the transmitter and receiver.

Sending stations

Table 14-3 Operating status indicators on the transmitter

Description	Color	Source	Meaning
+ 3V3	Red	On ExtremeUSB module at X21/22/23	+ 3.3 V supply OK
+5V	Red		+ 5 V supply OK
H1	Green	ExtremeUSB module at X21/22/23	Host OK
H2	Green		Link OK
+ 3V3	Red	On ExtremeUSB module at X11/12/13	+ 3.3 V supply OK
+5V	Red		+ 5 V supply OK
H3	Green	ExtremeUSB module at X11/12/13	Host OK
H4	Green		Link OK

When the ExtremeUSB line is operating properly, both green LEDs of the transmitter module (LEX) and both green LEDs of the receiver module (REX) light up on the videolink transmitter.

Receiver

Table 14-4 Operating status indicators on the receiver

Description	Color	Source	Meaning
+ 3V3	Red	On the ExtremeUSB module	+ 3.3 V supply OK
+5V	Red		+ 5 V supply OK
H1	Green	ExtremeUSB module	USB port OK
H2	Green		Link OK
H3	Green	OpenLDI receiver	Video interface (OpenLDI) active
H4	Green	+ 12 V, + 3.3 V, + 5 V of the power unit	Power o.k.

When the ExtremeUSB line is operating properly, both green LEDs of the transmitter module (LEX) and both green LEDs of the receiver module (REX) light up on the videolink receiver.

14.2.3 Screen saver

If a screen with high contrast is displayed unchanged for longer than 1 hour, the screensaver must be activated (screen switched dark) to protect the TFT display from "burn-in" of the last displayed screen.

For more information see:

/BEM/: HMI Embedded Operator's Guide

/IAM/: IM2 Installation and Start-up HMI Embedded; IM4 Installation and Start-up HMI Advanced

CAUTION
You may do irreversible damage to your TFT display if the screen saver is not activated.

14.3 Interfaces

14.3.1 Hardware

14.3.1.1 Overview

Table 14-5 Overview of hardware interfaces

Interfaces			
Type	**Function**	**Designation**	**Type**
Operator panel front	Videolink interface (incl. USB)	X201	MDR 36
	USB input (reserved)	X202	USB-B
	2 x USB output	X203/204	2x USB-A
	USB output	X205	Plug connector, 2 x 5-pole, with lock
	24V voltage supply	X206	Terminal 3-pole
MCP (QWERTY keyboard)	USB input	X301	Plug connector, 2 x 5-pole, with lock
	USB input (reserved – as an option to X301)	X302	USB-B
	USB output	X303/304	2x USB-A
MCP	MPI	X401	SUB-D, 9-pole
	Optional interface (input reserved)	X402	Plug connector, 1 x 4-pole
	Option interface (input reserved)	X403	Plug connector, 1 x 4-pole
	24V voltage supply	X404	Terminal 3-pole
Videolink transmitter 1 to 10 m	Videolink (incl. USB)	X101	MDR 36
	USB interface	X102	USB-A
	LVDS input	X103	Plug connector, 2 x 10-pole
	I/O interface for panel fronts from the PC	X104	Plug connector, 2 x 13-pole
	LVDS output	X107	Plug connector, 2 x 10-pole
	I/O interface to local operator panel front	X108	Plug connector, 2 x 13-pole
Videolink transmitter 1 to 20 m	As videolink transmitter 1 to 10 m; plus: second videolink (incl. USB)	X105	MDR 36
	USB interface	X106	USB-A
Cable	Videolink transmitter <=> Display unit	Video link	5 m: 6FX2002–1VL01–1AF0 10 m: 6FX2002–1VL01–1BA0 15 m: 6FX2002–1VL01–1BF0 20 m: 6FX2002–1VL01–1CA0
	Videolink transmitter <=> PCU	LVDS	Flat ribbon, 20-pole
	Videolink transmitter <=> PCU	I/O	Flat ribbon, 26-pole
	Display unit <=> Operator panel front	USB	Flat ribbon, 10-pole
	NC <=> Operator panel front	MPI	Standard Profibus

Signal types

Meaning of the abbreviations in table column "Signal type" for the interface assignments of the individual components:

I	Input
O	Output
B	Bi-directional
V	Power supply
OC	Open Collector

14.3.1.2 Interface assignment for operator panel front

X201 (videolink incl. USB)

Connector designation: X201; mini D ribbon (MDR), socket connector, 36-pole

Table 14-6 X201 pin assignments

Pin	Signal name	Signal type		Meaning
1	A0M	I	}	OPENLDI data
2	A0P	I		
3	A1M	I	}	
4	A1P	I		
5	A2M	I	}	
6	A2P	I		
7	CLK1M	I	}	OPENLDI clock
8	CLK1P	I		
9	ENVCC_12V	I	}	Enabling of LCD power supply (12V level)
10	M_12V	VI		Reference ground for signals with 12V level
11	Shield			Shield for twisted pair cables; connected to ground
12, ..., 21				Reserved
22	M (GND)			Reserved (ground)
23			}	Reserved
24	M (GND)			Reserved (ground)
25	M (GND)	V		Ground
26	Shield			Shield for the twisted pair cables

Pin	Signal name	Signal type		Meaning
27	RX_A / USB_M	I/B	}	Received data A (Extreme USB) / USB data -
28	RX_B / USB_P	I/B		Received data B (Extreme USB) / USB data +
29	TX_A	O	}	Transmitted data A (Extreme USB)
30	TX_B	O		Transmitted data B (Extreme USB)
31	BL_ON_12V	I	}	Backlight ON (12V signal)
32	M_12V	VI		Ground
33	XRESET_HUB	I	}	RESET to hub (low active, 12V signal)
34	M_12V			Ground
35	XPAN-PRES	O	}	Operator panel front is present
36	XPAN-PRES	I		Ground of videolink transmitter, transmitted to Pin 35

} Twisted Pair (shielded)

X202 (USB interface input)

Connector designation: X202; USB socket, 4-pole, type B

Table 14-7 X202 pin assignments

Pin	Signal name	Signal type	Meaning
1			reserved (capacitive connection to ground)
2	USB_DM	B	Data-; USB channel 0
3	USB_DP		Data+; USB channel 0
4	USB_GND	V	Ground for external USB interface

X203 / 204 (USB interface output)

Connector designation: X203/ 204; USB socket, 2 x 4-pole, type A

Table 14-8 X203 / 204 pin assignments

Pin	Signal name	Signal type	Meaning
A1	P5V_3_fused	VO	+ 5 V (fused) for external USB interface
A2	USB_D3M	B	Data-; USB channel 3
A3	USB D3P		Data+; USB channel 3
A4	USB_GND	V	Ground for external USB interface
B1		VO	+ 5 V (fused) for external USB interface
B2	USB_D4M	B	Data-; USB channel 4
B3	USB_D4P		Data+; USB channel 4
B4	USB_GND	V	Ground for external USB interface

X205 (QWERTY interface)

Connector designation: X205; plug connector, 2 x 5-pole, grid 2.54 mm
Interface is designed as a "high current USB" (500 mA).

Table 14-9 X205 pin assignments

Pin	Signal name	Signal type	Meaning
1	P5V_fused	VO	+ 5 V (fused) for external USB interface
2	USB_DM	B	Data-; USB channel 0
3	USB_DP		Data+; USB channel 0
4 / 5	M (GND)	V	Ground
6, ..., 10	N.C.		Not connected

X206 (24 V power supply)

Connector designation: X206; terminal block, 3-pole

Table 14-10 X206 pin assignments

Pin	Signal name	Signal type	Meaning
1	P24	V	24V potential
2	M24		Ground 24V
3	Shield		Shield connection

Coding switch S1

Accessible internally only

- with "Extreme USB": both switches set to 1 (factory setting)
- without "Extreme USB": both switches set to 2

14.3.1.3 Interface assignment for QWERTY keyboard

The QWERTY keyboard has a total of five USB ports, four of which can be used by the user (see figure in Section: "Control and Display Elements" --> "View of Function Blocks").
The integrated mouse is connected to the fifth USB port (X305).

- Interface X301 connects the keyboard to the videolink receiver.
  The max. cable length is 10 m.
- The keyboard can be connected to the PCU using interface X302 and a cable of max. 5 m in length.
- The two interfaces X303 and X304 are accessible by means of a two-tier USB-A connector.

X301 / X302

The two interfaces X301 and X302 (see Fig. in Section: "Operating and display elements" →"View of function blocks") are switched in parallel and designed as a "high powered interface" with max. 500 mA, 5 V.

- X301 is used to form the connection to the videolink receiver.
  Max. permissible ribbon cable length: 1 m.
- X302 supports a standard USB cable with length of max. 5 m. This cable can be used to form a direct connection to, for example, the PCU (e.g. for loading customer-specific keyboard tables).

⚠CAUTION

The two interfaces X301 and X302 should **not be used simultaneously** because they are connected in parallel.

Connector designation: X301; plug connector 2 x 5-pole with lock

Table 14-11 X301 pin assignments

Pin	Signal name	Signal type	Meaning
1	P5	V	Power supply 5 V
2	USB_P	B	Data +
3	USB_M		Data-
4/5	M (GND)	V	Ground
6/7/8	N.C.		Unassigned
9	SDA	B	Serial data for EEPROM
10	SCL	I	Clock for EEPROM

Table 14-12 X302 pin assignments

Pin	Signal name	Signal type	Meaning
1	P5	V	Power supply + 5 V
2	USB_DM0	B	Data-; channel 0
3	USB_DP0		Data+; channel 0
4	M (GND)	V	Ground

X303 / X304

X303 / 304 is a double standard USB A connector (see Figure in Section: "View of Function Blocks").
X303 and X304 are configured as "low powered interfaces" with max. of 100 mA, 5 V.

Connector designation: X303; USB-A connector, 4-pole

Table 14-13 X303 pin assignments

Pin	Signal name	Signal type	Meaning
A1	1P5	V	+ 5 V power supply for external USB device
A2	USB_DM2	B	Data-; channel 2
A3	USB_DP2		Data+; channel 2
A4	M (GND)	V	Ground

Connector designation: X304; USB-A connector, 4-pole

Table 14-14 X304 pin assignments

Pin	Signal name	Signal type	Meaning
B1	2P5	V	+ 5 V power supply for external USB device
B2	USB_DM3	B	Data-; channel 0
B3	USB_DP3		Data+; channel 0
B4	M (GND)	V	Ground

14.3.1.4 Interface assignment for MCP

X401 (MPI)

The MCP is connected to the MPI of the NC by means of interface X401.

Connector designation: X401; 9-pole Sub-D socket

Table 14-15 X401 pin assignments

Pin	Signal name	Signal type	Meaning
1/2	N.C.		Unassigned
3	RS_OPI	B	RS-485 data
4	ORTSAS_OPI	O	Output Request to Send, user interface
5	M5EXT	V	5 V external ground
6	P5EXT		5 V external potential
7	N.C.		Unassigned
8	XRS_OPI	B	RS-485 data
9	IRTSPG_OPI	I	In Request to Send PG

Baud rate (max. of 1.5 Mbaud) and station address of the MCP at the MPI bus are set at DIP switch S3 of the keyboard controller.

X402 / X403

Not available

X404 (power supply)

see X206 Section: "Interface assignment for operator panel front"

X11 / X12 (axis override interface)

Depending on the variant, the operator panel front has one or two axis override switches. These switches are connected to the MCP by means of ribbon cables.

Connector X11 is used to connect the rotary selector switch for feedrate override (32 graduations), irrespective of its installation position.

- With the "milling" version, the rotary selector switch for rapid traverse (32 graduations) is connected to X12.
- With the "turning" version, a handwheel is fitted in place of the rotary selector switch. The handwheel is directly connected to the NC controller.

Connector designation: X11; plug connector, 2 x 5-pole, with lock

Table 14-16 X11 pin assignments

Pin	Signal name	Signal type	Meaning
1/2	N.C.		Unassigned
3/4	M (GND)	V	Ground
5	N.C.		Unassigned
			Setting of override rotary selector switch
6	IN3_4	I	Significance 16
7	IN3_3		Significance 8
8	IN3_2		Significance 4
9	IN3_1		Significance 2
10	IN3_0		Significance 1

Connector designation: X12; (optional interface for "milling" variant)
Plug connector, 2 x 5-pole, with lock

Table 14-17 X12 pin assignments

Pin	Signal name	Signal type	Meaning
1/2	N.C.		Unassigned
3/4	M (GND)	V	Ground
5	N.C.		Unassigned
			Setting of override rotary selector switch
6	IN7_4	I	Significance 16
7	IN7_3		Significance 8
8	IN7_2		Significance 4
9	IN7_1		Significance 2
10	IN7_0		Significance 1

14.3.1.5 Interface assignment for videolink transmitter

X101/X105 (videolink incl. USB)

Connector designation: X101/105; mini D ribbon (MDR), socket connector, 36-pole

Table 14-18 X101/105 pin assignments

Pin	Signal name	Signal type		Meaning
1	A0M	O	}	OPENLDI data
2	A0P	O		
3	A1M	O	}	
4	A1P	O		
5	A2M	O	}	
6	A2P	O		
7	CLK1M	O	}	OPENLDI clock
8	CLK1P	O		
9	ENVCC_X		}	Enabling of LCD power supply (12V level)
10	M (GND)			Ground
11	Shield			Shield for twisted pair cables; connected to ground
12, ..., 22				Reserved
23			}	
24				
25	M (GND)	V		Ground
26	Shield			Shield for the twisted pair cables
27	TX_A / USB_M	O/B	}	Transmitted data A (Extreme USB) / USB data -
28	TX_B / USB_P	O/B		Transmitted data B (Extreme USB) / USB data+
29	RX_A	I	}	Received data A (Extreme USB)
30	RI_B	I		Received data B (Extreme USB)
31	BL_ON_x	O	}	Backlight On (12V signal)
32	M_	O		Ground
33	XRESET_HUB	O	}	RESET to downstream hub (low active, 12 V signal)
34	M (GND)			Ground
35	XPAN-PRES_x		}	Operator panel front is present
36	M (GND)	V		Ground

} Twisted Pair (shielded)

X102 / X106 (USB downstream)

Interface is configured as high-current USB (500 mA).

Connector designation: X102 / X106; USB socket, 4-pin, type A

Table 14-19 X102 or X106 pin assignments

Pin	Signal name	Signal type	Meaning
1	USB_P5V_fused	VO	+ 5 V (fused) for external USB interface
2	USB_D0M	O	Data-; USB channel 0
3	USB_D0P		Data+; USB channel 0
4	USB_GND	V	Ground for external USB interface

Note

X106 is not available at present.

Connector designation: X103; plug connector, 2 x 10-pin, grid 2.54 mm

Table 14-20 X103 pin assignments

Pin	Signal name	Signal type	Meaning
1/2	P5V	VI	+ 5 V
3	RXIN0-	I	LVDS input signal Bit 0 (-)
4	RXIN0+		LVDS input signal Bit 0 (+)
5/6	P3V3	VI	+ 3.3 V
7	RXIN1-	I	LVDS input signal Bit 1 (-)
8	RXIN1+		LVDS input signal Bit 1 (+)
9/10	GND	V	Ground
11	RXIN2-	I	LVDS input signal Bit 2 (-)
12	RXIN2+		LVDS input signal Bit 2 (+)
13/14	GND	V	Ground
15	RXCLKIN-	I	LVDS clock signal (-)
16	RXCLKIN+		LVDS clock signal (+)
17/18	GND	V	Ground
19/20			Reserved

X104 (I/O interface for operator panel fronts from the PC)

Connector designation: X104; plug connector, 2-row, grid 2.54 mm

Table 14-21 X104 pin assignments

Pin	Signal name	Signal type	Meaning
1	GND	V	Ground
2	P12V	VI	Power supply for inverter (max. 1.1 A)
3	BL_ON	I	Backlight On (5 V ... 12 V = On)
4	P5V_fused	VI	+ 5 V VCC (fused)
5	GND	V	Ground
6	P3V3_fused	VI	+ 3.3 V VCC (fused)
7, ..., 10			Reserved
11	P5V_fused	VI	+ 5 V VCC (fused)
12	USB_D1M	B	USB data– Channel 1
13	USB_D1P		USB data+ Channel 1
14	GND	V	Ground
15	LCDSEL0	O	Display type-Select signal 0
16	LCDSEL1		Display type-Select signal 1
17	LCDSEL2		Display type-Select signal 2
18	LCDSEL3		Display type-Select signal 3
19	RESET_N		Reset signal (low active, with pull-up resistor set to high)
20			(Port for system loudspeaker)
21			(HD LED) *)
22			(MIP/DP LED) *)
23			(Ethernet LED) *)
24	TEM_ERR	O	(Temperature error LED) *)
25			(Watchdog error LED) *)
26			(Watchdog OK LED) *)

*) Anode with 1kΩ in series on mainboard

X107 (LVDS output to operator panel)

Connector designation: X107; plug connector, 2 x 10-pin, grid 2.54 mm

Table 14-22 X107 pin assignments

Pin	Signal name	Signal type	Meaning
1/2	P5V	VO	+ 5 V
3	TXOUT0-	O	LVDS output signal Bit 0 (-)
4	TXOUT0+		LVDS output signal Bit 0 (+)
5/6	P3V3	VO	+ 3.3 V
7	TXOUT1-	O	LVDS output signal Bit 1 (-)
8	TXOUT1+		LVDS output signal Bit 1 (+)
9/10	GND	V	Ground
11	TXOUT2-	O	LVDS output signal Bit 2 (-)
12	TXOUT2+		LVDS output signal Bit 2 (+)
13/14	GND	V	Ground
15	TXCLKOUT-	O	LVDS clock signal (-)
16	TXCLKOUT+		LVDS clock signal (+)
17/18	GND	V	Ground
19/20			Reserved

X108 (I/O interface for local operator panel front)

Connector designation: X108; plug connector, 2 x 13-pin, grid 2.54 mm

Table 14-23 X108 pin assignments

Pin	Signal name	Signal type	Meaning
1	GND	V	Ground
2	P12V	VI	Power supply for inverter (max. 1.1 A)
3	BL_ON	I	Backlight On (5 V ... 12 V = On)
4	P5V_fused	VI	+ 5 V VCC (fused)
5	GND	V	Ground
6	P3V3_fused	VI	+ 3.3 V VCC (fused)
7, ..., 10	N.C.		Not connected
11	P5V_fused	VI	+ 5 V VCC (fused)
12	USB_D1M	B	USB data- Channel 1
13	USB_D1P		USB data+ Channel 1
14	GND	V	Ground
15, ..., 23	N.C.		Not connected
24	TEMP_ERR	O	(LED temperature drift; anode with 1 kΩ in series on the mainboard)
24/26	N.C.		Not connected

Rotary selector switch S1

Factory setting for the choice of display type:
Position 9 corresponds to the 15” TFT display.

Note

All the displays used in a system must be of the same type
(e.g. 3 times 15" TFT XGA resolution).

If the setting is incorrect, the display may be irreparably damaged in a short time.

DIP switch S2

- 10 m transmitter variant (1 x Videolink):
  - 1 and 3 = any or S2 not equipped
  - 2, 4 – 8 = OFF
- 20 m transmitter variant (2 x Videolink):
  - 1 and 3 = ON
  - 2. 4 – 8 = OFF

14.3.2 Software

Key layout of the MCP

Layout of the machine control keys (applies to "turning" and "milling")

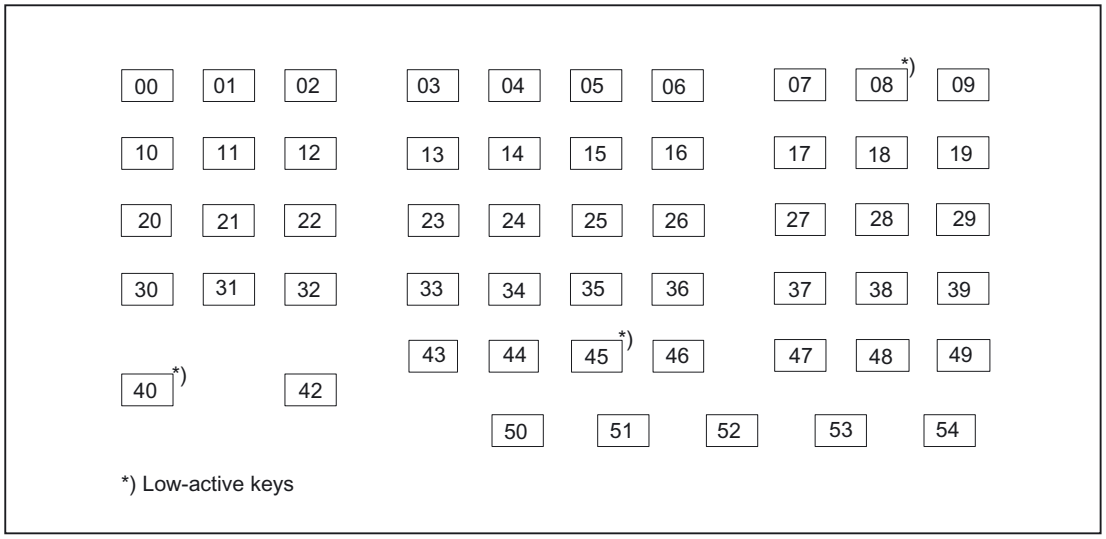

Input screen of the MCP

Table 14-24 Assignment of the input words/bytes to the machine control keys
(the number keys 00 - 54 correspond to the key numbers in the figure above)

Input	Bit7 (MSB	Bit6	Bit5	Bit4	Bit3	Bit2	Bit1	Bit0 (LSB)
Word 0 Low	Key 40 *)	Key 36	Key 35	Key 34	Key 30	Key 00	Key 10	Key 20
Word 0 High	Key 42	Key 09	Key 08 *)	Key 07	Key 04	Key 02	Key 01	Key 11
Word 1 Low	Key 46	Key 45 *)	Key 03	Key 05	Key 43	Key 33	Key 23	Key 13
Word 1' High	Key 31	Key 06	Key 14	Override 1 E	Override 1 D	Override 1 C	Override 1 B	Override 1 A
Word 2 Low	Key 49	Key 47	Key 28	Key 15	Key 16	Key 17	Key 19	Key 21
Word 2 High	Key 22	Key 24	Key 25	Key 26	Key 18	Key 38	Key 29	Key 27
Word 3 Low	Key 32	Key 37	Key 39	Key 44	Key 12	Key 48	Key 50	Key 51
Word3 High	Key 52	Key 53	Key 54	Override 2 E	Override 2 D	Override 2 C	Override 2 B	Override 2 A

*) Low-active keys

Remarks:

- The "Override2" function only exists in the "milling" version. This function does not exist in the "turning" version; the bits concerned are each set to 1.
- Significance with override: A = 1, B = 2, C = 4, D = 8, E = 16.

14.4 Mounting

14.4.1 Operator panel front with videolink receiver

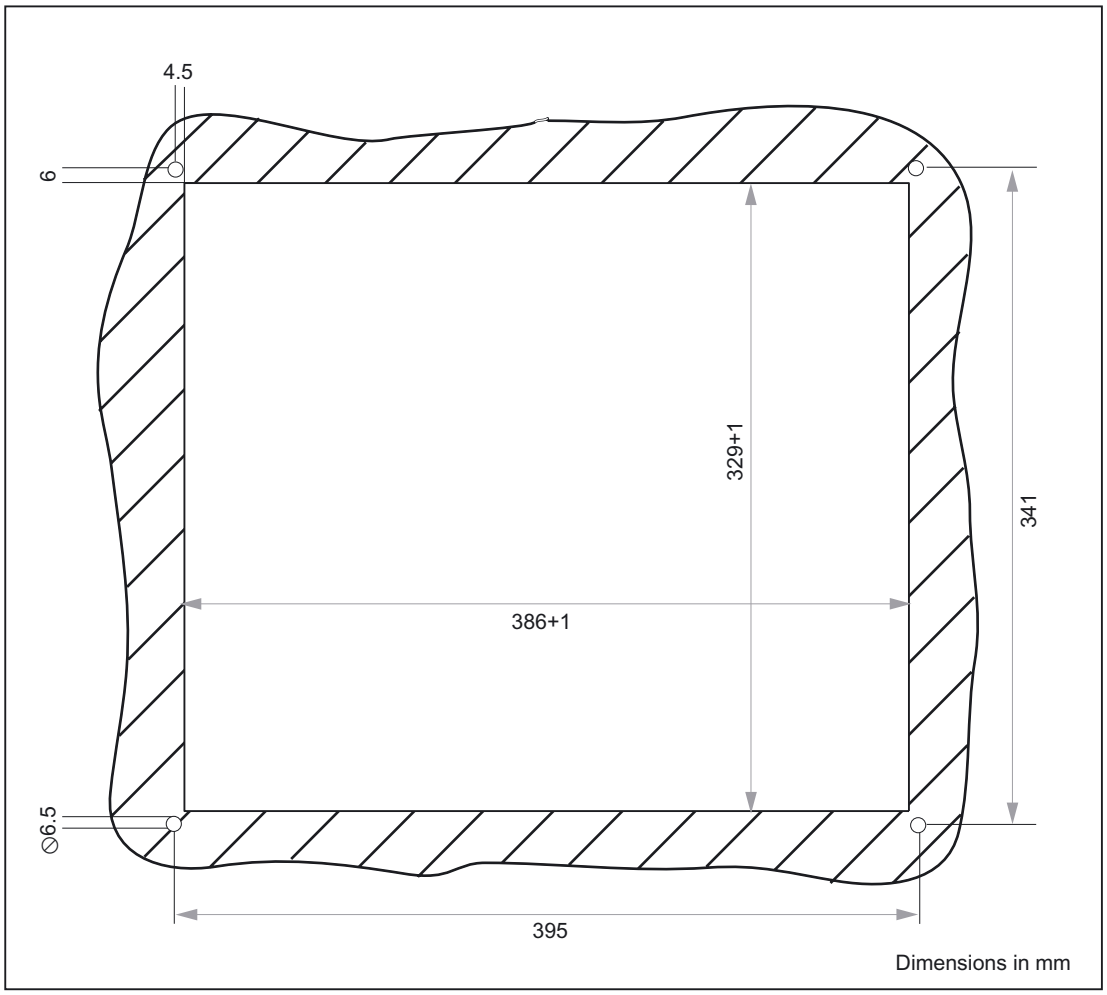

Figure 14-10 Panel cutout for operator panel front

The operator panel front is connected to the other components by means of cables (see Fig. Section: "Control and Display Elements" --> "View of Function Blocks")

Cable connections

- **Machine control panel (MCP)**
  - For noise immunity reasons, the USB ribbon cable connection from the operator panel front (interface X205) to the MCP (interface X301) must always be installed and secured close to the top side of the metal plate.
  - No other cables which could cause noise interference should be installed in the immediate vicinity.
- **Video link receiver**
  - The videolink cable connects interface X201 of the videolink receiver (mounted on the rear of the operator panel front) to interface X101 of the videolink transmitter (mounted on the rear of the PCU).
  - The cable is secured at the U-shaped panel cutouts on the rear of the operator panel front using cable ties (see picture below).

    Securing in this way also relieves the strain on connectors which do not have strong connector catches (e.g. USB).

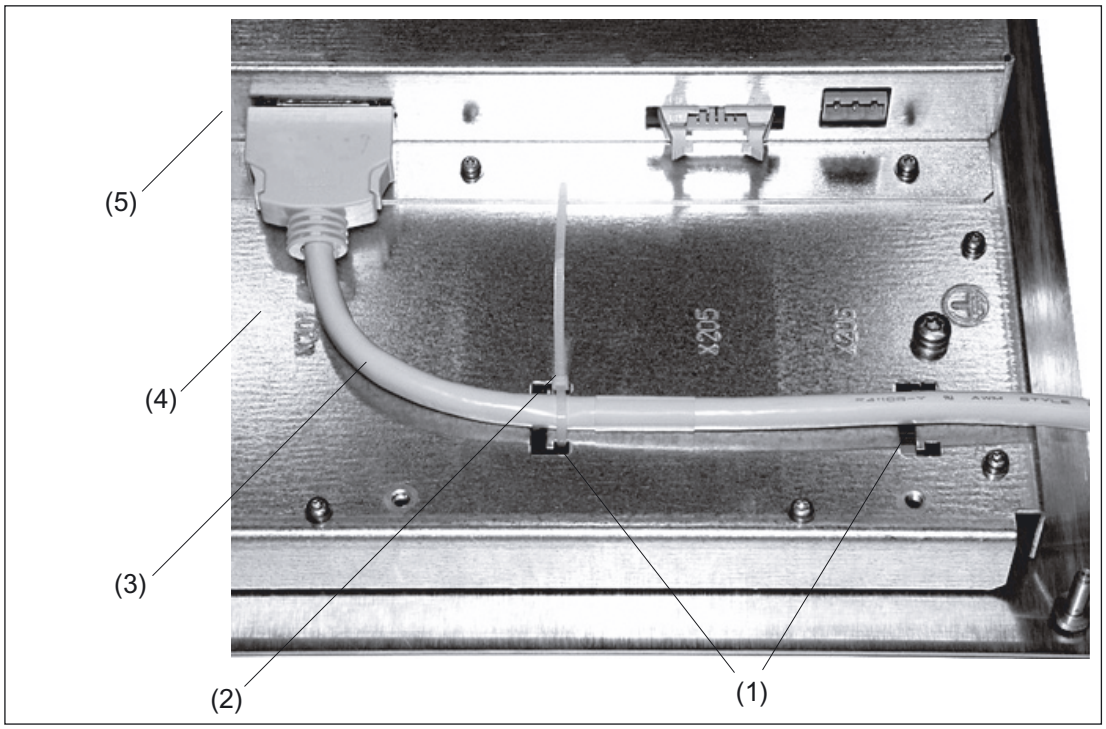

Figure 14-11 Cable attachment on rear of operator panel front

(1) Panel cutouts for cable attachment
(2) Cable tie
(3) Video link cable
(4) Back of operator panel front
(5) Video link receiver

Note

In cases where a high degree of noise interference is likely or the distance between the operator panel front and the MCP is relatively large, it is advisable to purchase USB cables with shielding. Interface X203 behind the front and interface X302 behind the machine control panel are then connected to each other. The ribbon cable does not need to be fitted in this case.

Connector X302 on the machine control panel (QWERTY keyboard) can also be connected directly to the PCU or a PC using a standard USB cable.

14.4.2 Machine control panel

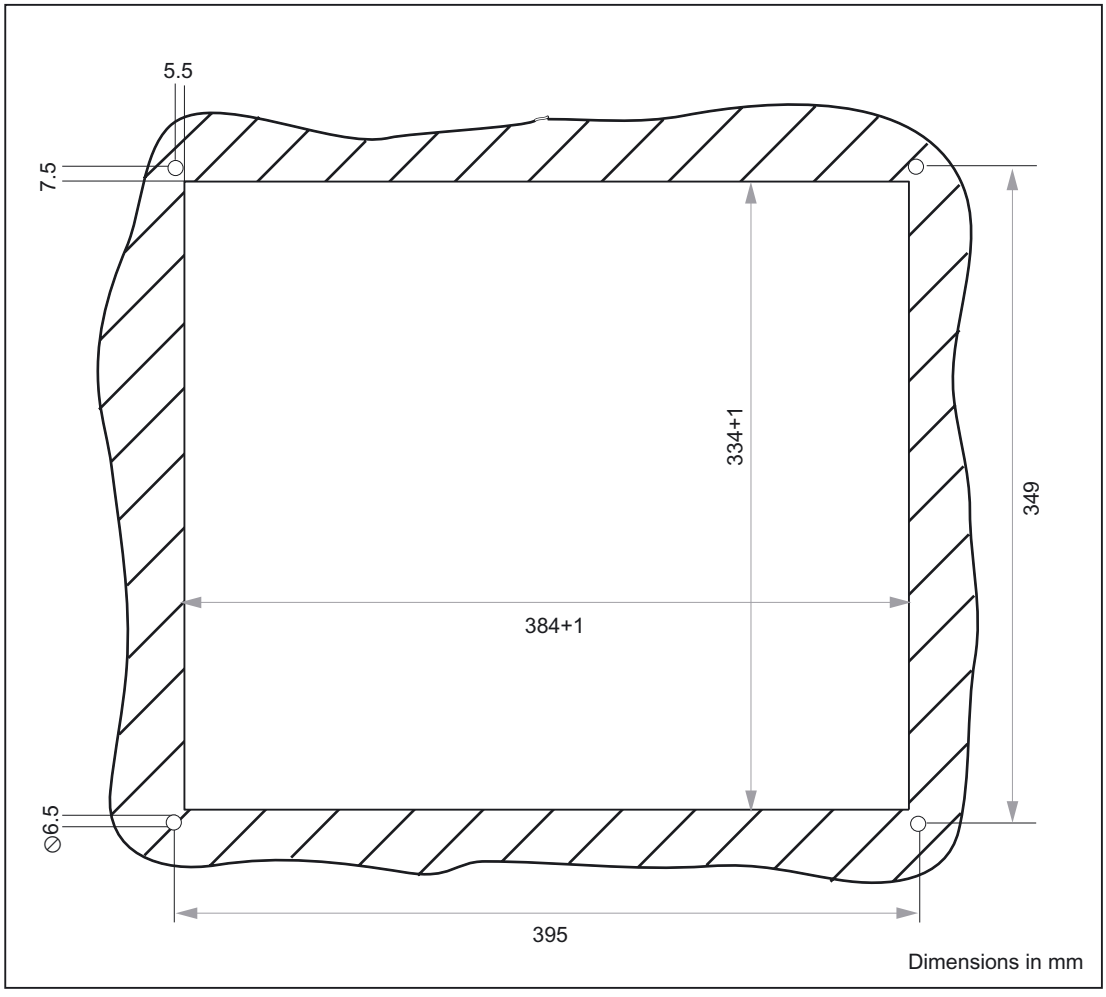

Figure 14-12 Panel cutout for machine control panel

Procedure

1. Insert the operator panel front with its four threaded bolts (see Fig. "MCP turning", Section: "Mechanical Design") into the mounting holes of the prepared mounting cut-out (picture above).

   The spacer rings ensure that the rubber seal is not squashed when installed.
2. Secure the operator panel front from the rear side using the M5 nuts and suitable circlips.
3. Attach the ground connection (see Figure below).
4. Connect all interfaces except for interface X404.
5. Connect interface X404 to the 24 V power supply.

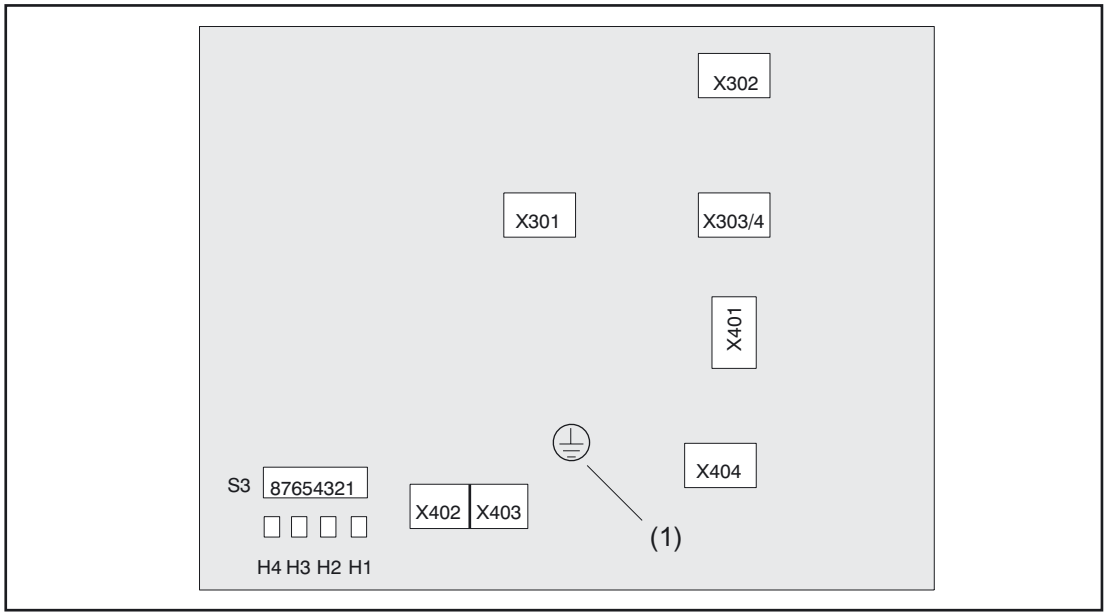

Figure 14-13 Rear view of MCP ("milling" and "turning") showing position of the connections, programming switch S3 and the status LEDs H1, ..., H4

14.4.3 Videolink transmitter

The videolink transmitter is mounted between the mounting brackets under the PCU (see Fig: "PCU 50 with videolink transmitter", Section: "Mechanical Design" → "Videolink Transmitter")

You will find the reference diagrams for the individual mounting stages at the end of the description of the procedure.

Procedure

1. Plug the supplied cables into the connectors of the videolink transmitter**(A)**.
2. Mount the first mounting bracket on the PCU **(B)**.
3. Hook the videolink transmitter into this mounting bracket **(D)**.

4. Mount the second mounting bracket after attaching it to the opposite hinge bolt **(A)** of the videolink transmitter.
5. Plug the connecting cable into the connectors on the PCU **(C)** .
6. Swivel the videolink transmitter into place on the PCU **(D)** .
7. Push the videolink transmitter forwards in the locking mechanism **(D**, see arrow, to the left**)** until it locks down into place **(E)**.
8. Secure the videolink transmitter to the mounting brackets with the screws supplied **(E)**.

The videolink transmitter is now firmly secured to the PCU mounting brackets **(F)** and can be correctly mounted with the PCU.

CAUTION
If it is necessary to dismantle the videolink transmitter, please release the fastening screws and slide the video transmitter horizontally before swiveling it away from the PCU, in accordance with step 7 **(D)**. Otherwise, damage is likely.

Reference diagrams

(A)

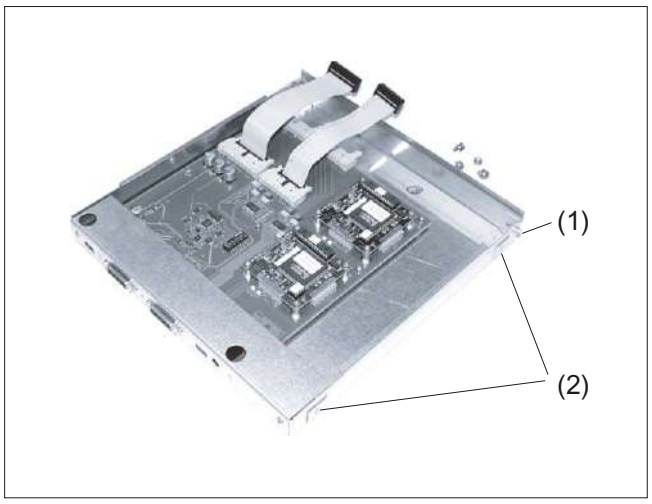

Figure 14-14 Videolink transmitter with connecting cables

(1) Hinge bolts
(2) Threaded holes for fastening screws

CAUTION
To prevent damages: Only plug the cable connectors into the sockets shown in the figure.

(B)



Figure 14-15 PCU 50 with mounting brackets

(1) Mounting bracket

(C)

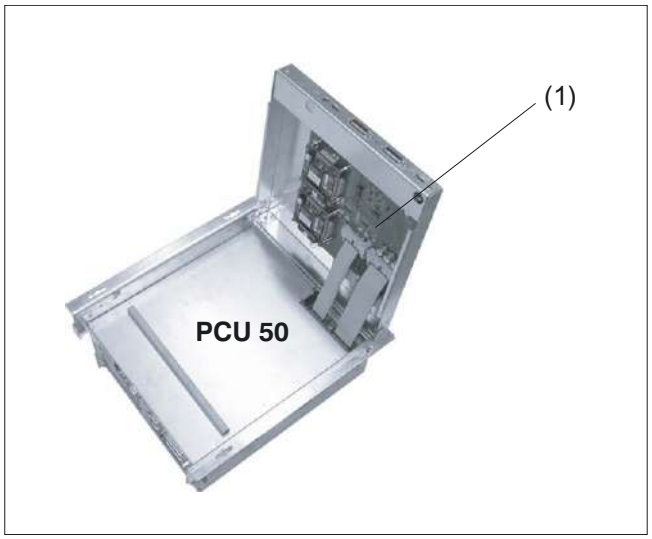

Figure 14-16 Videolink transmitter hooked into place with the hinge bolts

(1) Videolink transmitter

(D)

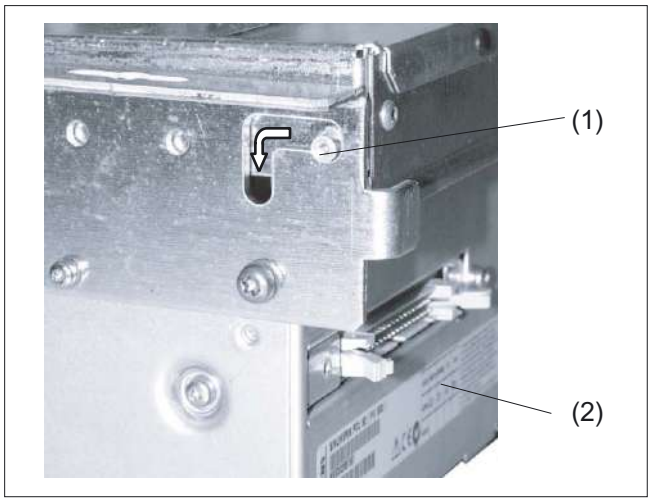

Figure 14-17 Hinge of the videolink transmitter before being locked in position

(1) Hinge bolts
(2) PCU 50

(E)

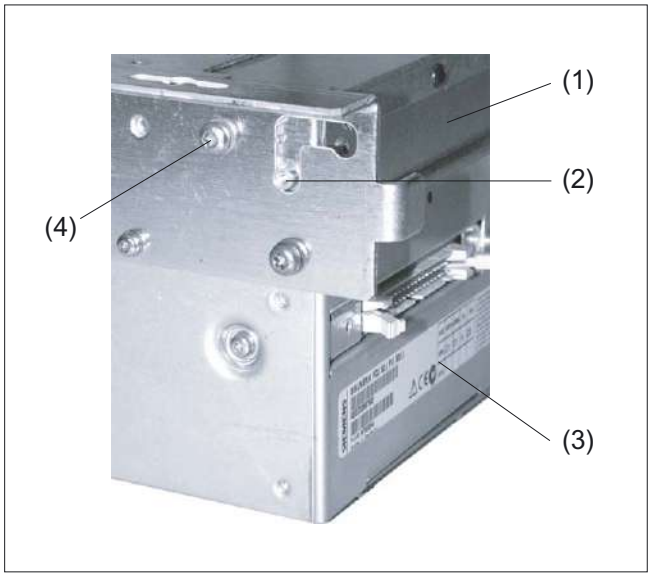

Figure 14-18 Videolink transmitter, locked in position and screwed tight

(1) Videolink transmitter
(2) Hinge bolts
(3) PCU 50
(4) Mounting screw

(F)

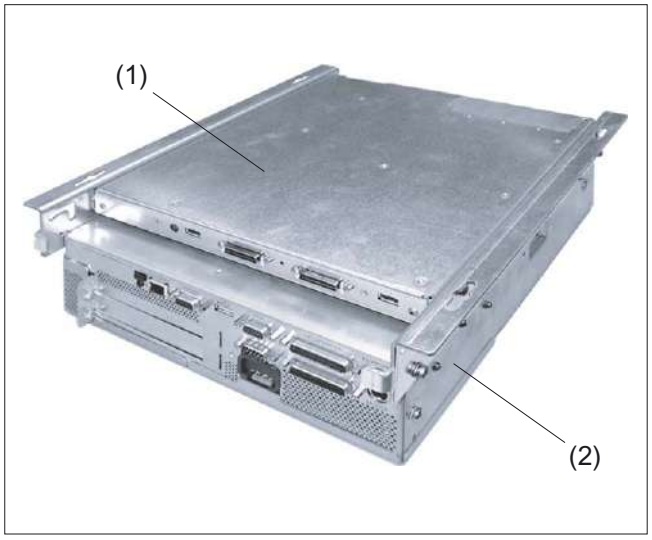

Figure 14-19 Videolink transmitter fully mounted to the PCU 50

(1) Videolink transmitter
(2) PCU 50

14.5 Technical specifications

14.5.1 Operator panel front

Table 14-25 Technical specifications for operator panel front

Dimensions (W°xH°x°D)	approx. 416 x 382 x 65mm	
Weight	Approx. 6.5 kg	
Display	15" TFT	
Keys	Vertical and horizontal softkeys (short-stroke keys)	
Voltage supply	Rated voltage 24 V, voltage range 19 – 31 V	
Power consumption	Approx. 19 W	
Interfaces	Videolink, USB, 24 V terminal connection	
Degree of protection	Front: IP54	Rear side: IP00
Ambient temperature during operation	External: 0 °C to 45 °C (on the display)	Internal: 0 °C to 55 °C
Ventilation	Free convection, without fan	
Casing	Front panel: Stainless steel, brushed diagonally (grain 240)	Rear side: Galvanized steel plate

14.5.2 Machine control panel

Table 14-26 Technical data for MCP

Dimensions (W°xH°x°D)	Turning: approx. 416 x 370 x 107 mm	Milling: approx. 416 x 370 x 84 mm
Mounting depth	Max. 65 mm	
Weight	Approx. 4.4 kg	
Keys	Mechanical short-stroke keys	
Voltage supply	Rated voltage 24 V, voltage range 19 – 31 V	
Power consumption	Approx. 19 W	
Interfaces	USB, MPI, 24 V terminal connection	
Degree of protection	Front: IP54	Rear side: IP00
Ambient temperature during operation	External: 0 °C to 45 °C (due to display)	Internal: 0 °C to 55 °C
Ventilation	Free convection, without fan	
Casing	Front panel: Stainless steel, brushed diagonally (grain 240)	Rear side: Galvanized steel plate

14.5.3 Videolink transmitter

Table 14-27 Technical data for videolink transmitter

Dimensions (W°xH°x°D)	approx. 265 x 277 x 35 mm	
Weight	approx. 2.2 kg with two brackets, without PCU	
Voltage supply	Videolink transmitter is supplied with power from the PCU	
Power consumption	Approx. 19 W	
Interfaces	Videolink, USB, LVDS, keyboard and special interface	
Degree of protection	IP00	Mounted on PCU: IP20
Ambient temperature	0 °C to 55 °C during operation	
Ventilation	Free convection, without fan	
Casing	Galvanized steel plate	

14.6 Replacement parts

14.6.1 Overview

The following spare part kits are available for the operator panel front 15" TFT (width 416 mm):

Name	Description	Order number (MLFB)
Hand wheel	Handwheel for machine control panel, width 416mm, T-version	6FC5247-0AF50-0AA0
Rotary switch	Rotary selector switch for feedrate / rapid traverse override, 1x23G, grad=32, knob and cover	6FC5247-0AF50-1AA0
Mouse	USB mouse for front	6FC5247-0AF01-0AA0
EMERGENCY STOP [1])	Button	3SB2000-1AC01
	Holder	3SB2908-0AA
	Switching element	3SB2404-0C
Illuminated pushbuttons [1])	Complete	3SB3001-0AA71
	Switching element	3SB3400-0A
	Switching element with lamp	3SB3400-1D

[1]) Submit orders to SIEMENS Amberg

14.6.2 Replacement

14.6.2.1 Hand wheel

Removing the handwheel

1. Loosen the two opposing grub screws (6) of the rotary button (1).
2. Pull the rotary button from the shaft.
3. Loosen the three fastening screws M3 (4) with the Torx screwdriver T10.
4. Pull the handwheel (3) backward out of the front plate.
5. Remove the wiring.

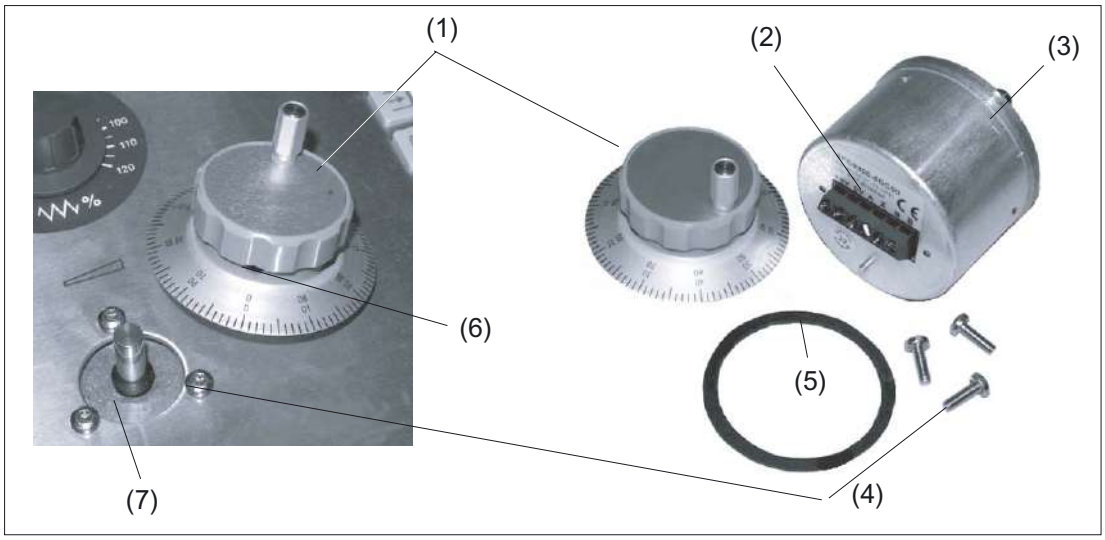

Figure 14-20 Removing the handwheel

(1) Rotary knob (detached on the right)
(2) Connection terminals
(3) Hand wheel
(4) Fastening screws M3
(5) O-ring
(6) Grub screw (Inbus)
(7) Handwheel shaft

Installing the handwheel

Installation is undertaken in reverse order.
Ensure that the O-ring (5) is seated correctly.

14.6.2.2 Rotary switch

Removing the rotary switch

1. Lever the cover (6) off of the rotary button (2) (snap-on connection!).
2. Remove the nut of the collet (1) with a wrench (width 10).
3. Remove the entire rotary button (2).
4. Remove the lock nut (4) on the shaft of the rotary switch (3) with a wrench (width 14).
5. Remove the connector on the end of the rotary switch cable from the socket.
6. Remove the rotary switch

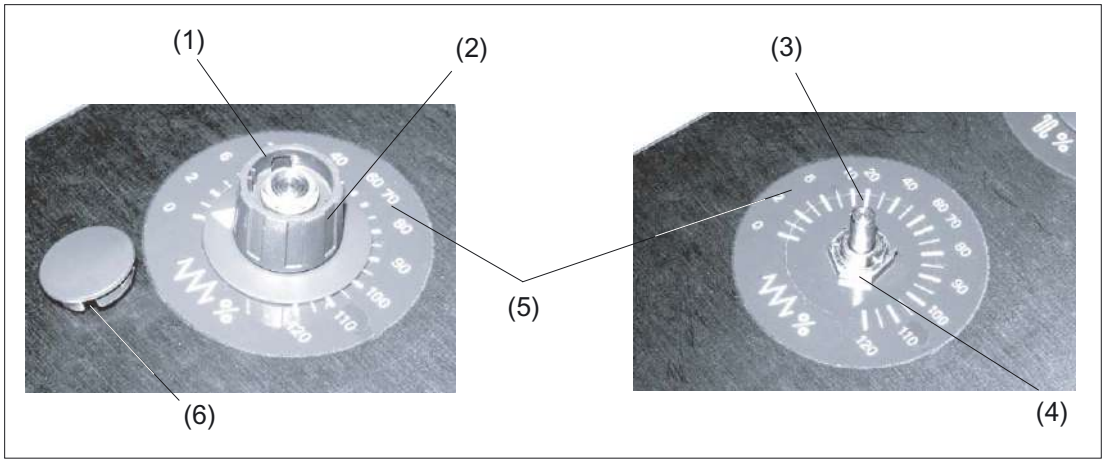

Figure 14-21 Removal of rotary switch

(1) Nut of the collet
(2) Rotary knob
(3) Rotary switch shaft
(4) Lock nut
(5) Scale
(6) Cap

Installing the rotary switch

1. Push the O-ring (1) onto the shaft of the new rotary switch as a seal.
2. Insert the rotary switch into the front cutout so that pressure is applied to the O-ring.
3. Screw the lock nut (4) on the shaft of the rotary switch from the front with a wrench (width 14).
4. Connect arrow ring (2) and rotary button (5).
5. Slide both parts onto the shaft of the rotary switch.
6. Tighten the collet nut of the rotary button with a wrench (width 10). Align the arrow point on the ring with position "0" on the scale.
7. Place the cover (3) on the rotary button and snap it into position.
8. Fold and fasten the connecting cable (6) as shown in the figure on the right.

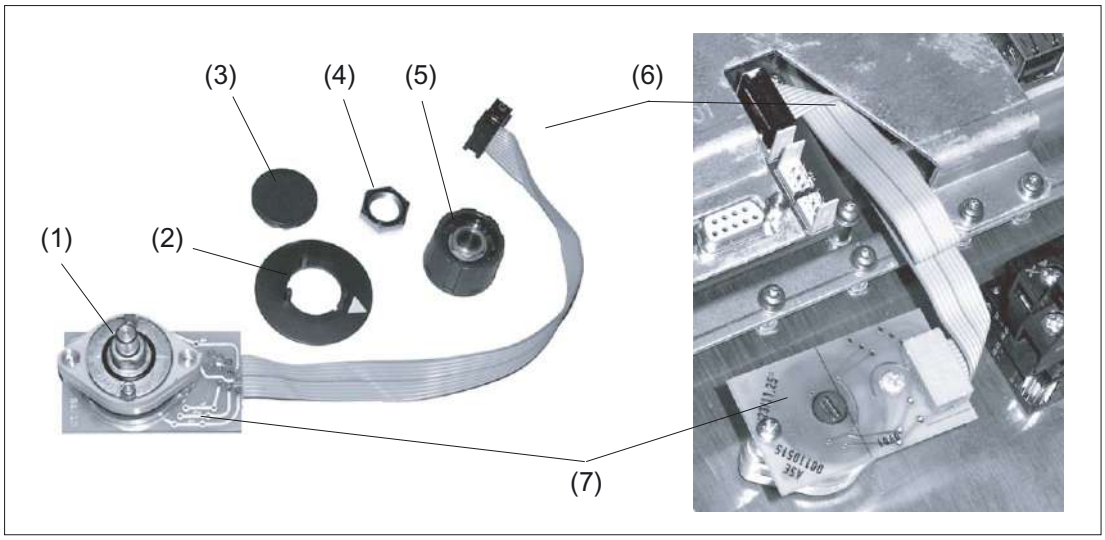

Figure 14-22 Installation of rotary switch

(1) O-ring
(2) Arrow ring
(3) Cap
(4) Lock nut
(5) Rotary knob
(6) Connecting cable
(7) Terminal board

When installing the second rotary switch, proceed in the same manner.
The recommended folding method for the cables is shown in the figure.

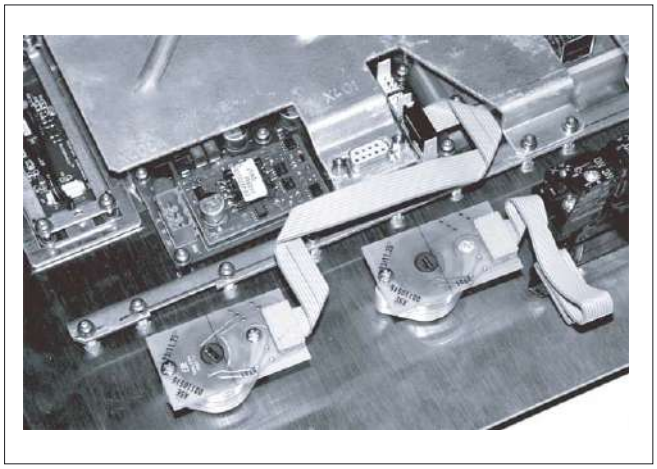

Figure 14-23 Both rotary selector switches installed (top switch [right] not yet connected)

14.6.2.3 Mouse

Removing the mouse

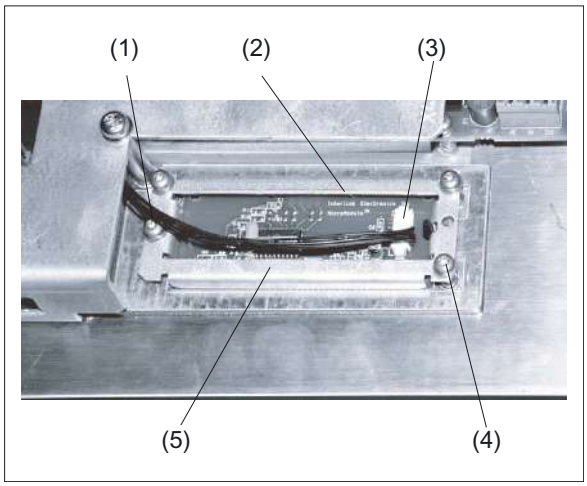

Figure 14-23 Mouse prior to removal

(1) Connecting cable
(2) Mouse board
(3) Cable connector
(4) Mounting screw
(5) Retainer frame

1. Remove the cable connector (3) from the mouse (2).
2. Loosen the four fixing screws M3x6 (4) on the retaining frame (5) using Torx screwdriver T10.
3. Remove the retaining frame.
4. Lift the mouse out of the front panel.

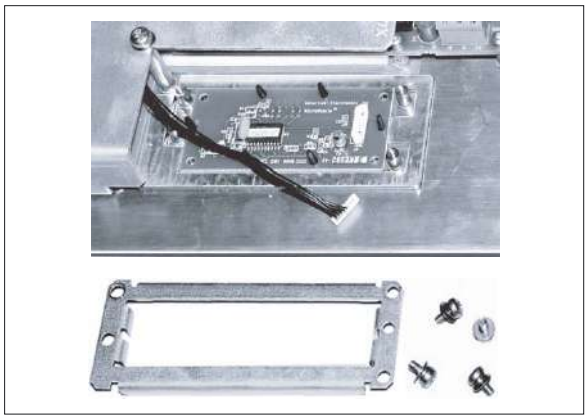

Figure 14-24 Mouse fastening released

Installing the mouse

The mouse is installed in reverse order.
Ensure the alignment is correct based on the mouse symbol.

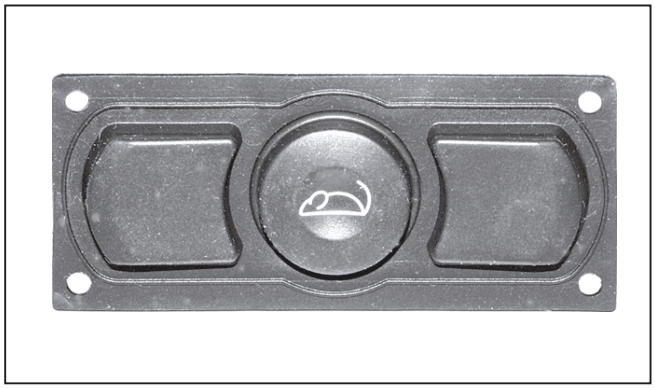

Figure 14-26 Removed mouse

Operator panel 15" TFT without VLE

15

15.1 Description

15.1.1 Validity

The following description applies to the following components:

Description	Properties	Order No.:
SINUMERIK operator panel front, width 416 mm	With mech. keys, without integrated videolink receiver	6FC5203-0AF50-0AA0
SINUMERIK machine control panel MCP 416C-M	Variant *Milling*, mech. keys, rapid traverse and feed override, mouse	6FC5203-0AF50-3AA1
SINUMERIK machine control panel MCP 416C-T	Variant *Turning*, mech. keys, handwheel and feed override, mouse	6FC5203-0AF50-4AA1

15.1.2 Overview

Overview

The operator panel consists of

- a 15" TFT operator panel front,
- a machine control panel (MCP 416C-M or T) with integrated CNC keyboard and mouse.

CAUTION
The PCU should not be mounted in the "air flow downward" position (i.e. the interfaces at the top) to prevent heat accumulation.

Note

The videolink receiver must be ordered separately.
Order No.: 6FC5247-0AF22-0AA0

15.1.3 System Features

Operator panel

The operator panel (see Section: "Control and Display Elements" --> "View of Function Blocks") consists of

- an operator panel front with 15" display and integrated operator control functions in the form of vertical and horizontal softkeys and
- a machine control panel with integrated CNC keyboard.
  The key labels and displays on the operator panel front are different for variants "T" (Turning) and "M" (Milling). The “T” variant has a handwheel instead of the second override switch.

Communication

A data transmission path has been created to allow the PCU to be installed at a distance (distributed configuration) from the operator panel:

- The operator panel (operator panel front + MCP) communicates with the PCU via a transmission chain: videolink - receiver - videolink - cable - videolink transmitter. The image data is transmitted by means of videolink technology and the keyboard data by USB technology.

  As a result, the PCU and operator panel can be installed up to 20 m apart (XGA resolution).
- The NC and MCP functions on the operator panel communicate via MPI.
- NC and PCU also communicate by means of MPI.
- Only TFT displays are supported.

  Hardware support for USB only for version 1.1 and earlier

EMERGENCY STOP key

There is an EMERGENCY STOP button on the machine control panel. This also has to be wired up (see Fig.). "Block diagram of emergency stop button," Section: "Mechanical Design" → "Machine Control Panels").

Power Supply

The machine control panel and PCU must be supplied with 24 V DC.

Note

To prevent error messages when the PCU is booted, the operator panel front and PCU should be switched on **simultaneously** using the 24V supply.

15.1.4 Mechanical design

15.1.4.1 Operator panel front

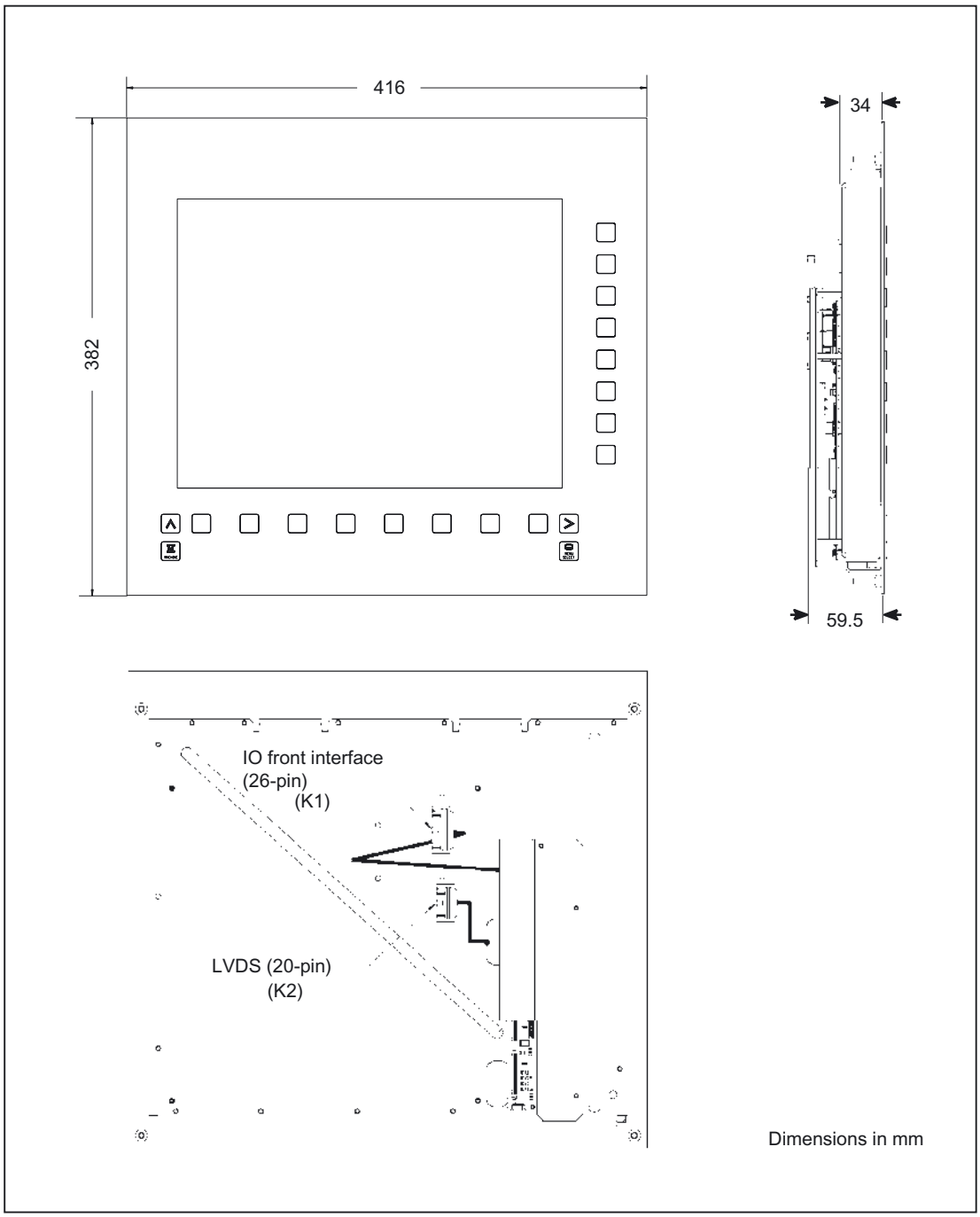

Figure 15-1 Front, side and rear views

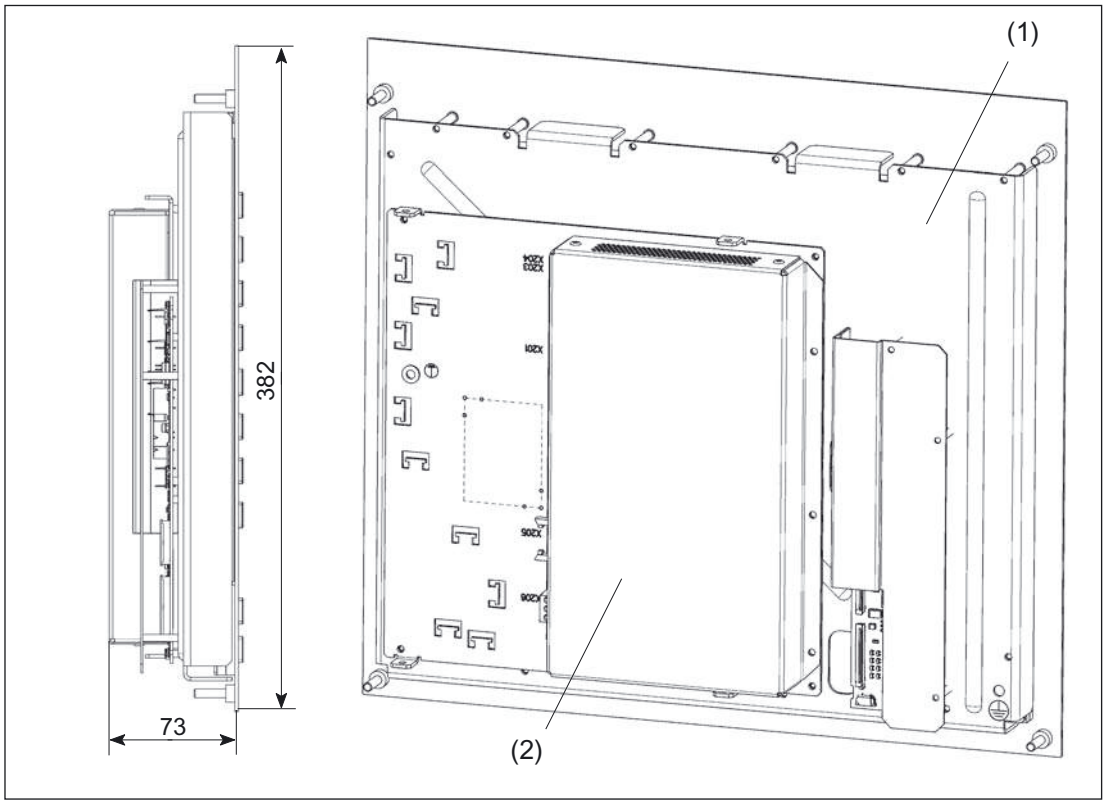

Figure 15-2 Example: Side and rear views of operator panel front with videolink receiver installed (for mounting see Chapter "Distributed Configuration with Videolink Receiver")

(1) Operator panel front
(2) Videolink receiver

15.1.4.2 Machine control panels

MCP 416C-M

The following diagrams show the "milling" machine control panel in front and side view and the position of the exchangeable key caps.

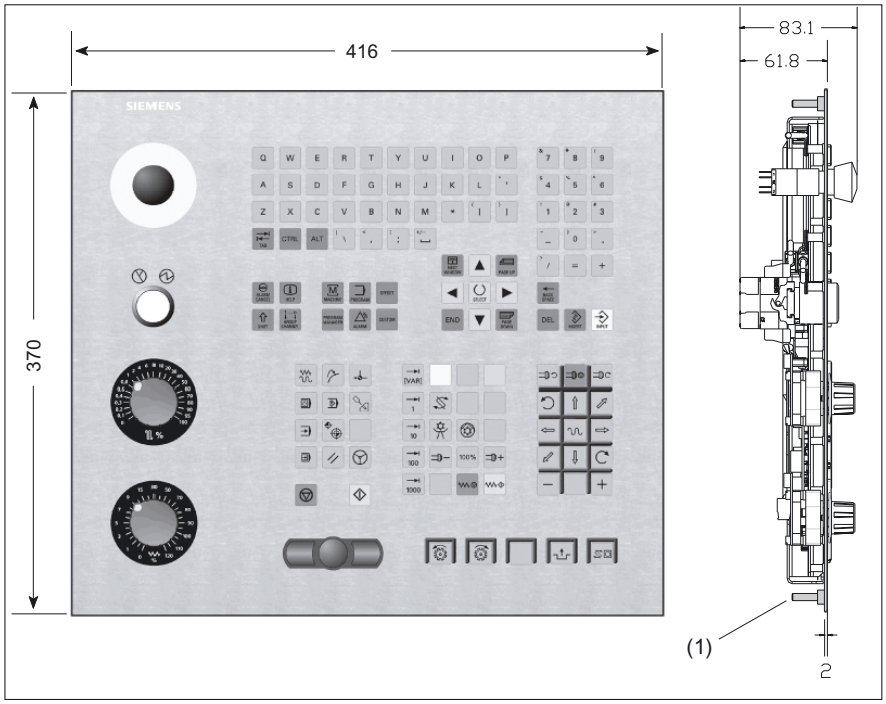

Figure 15-3 Front and side view of the MCP 416C-M

(1) Threaded bolt M5 (for detailed view, see "Threaded Bolts")

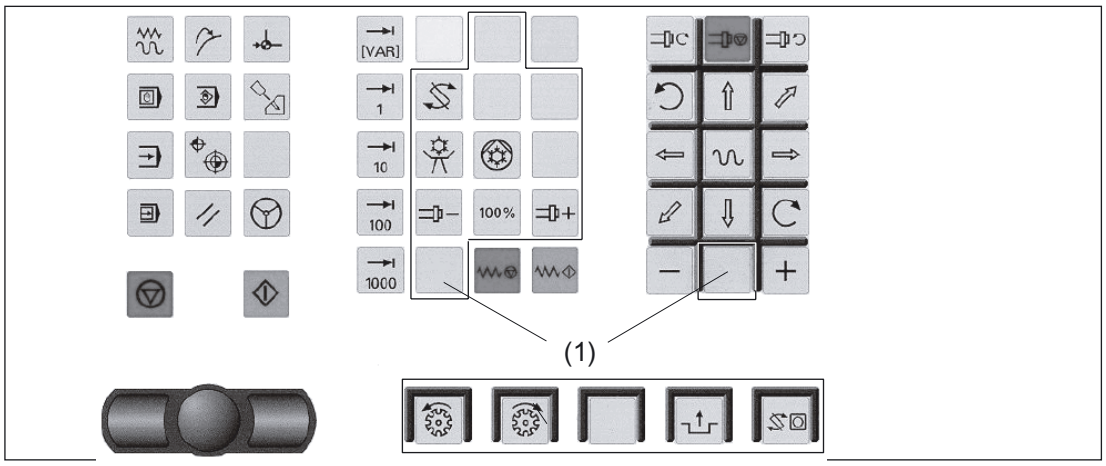

Figure 15-4 Exchangeable key caps (1)

The MCP 416C-M is supplied with 10 exchangeable key caps (color: light basic).
The printed symbols and there meaning are given in the table below.

Symbol	Meaning	Symbol	Meaning
i	Info (7155)	H	(6035)
	(7159)		Spray gun (7156)
	Chuck open/closed (7158)		Unlock door for workpiece conveyor (7162)
Axis 5...n	Axis switching (7154)		(7161)
	Acknowledgement (7158)		Chip conveyor (7160)

The following figure shows the rear view of the milling MCP and the turning MCP with the position of the connections, the S3 programming switch and the status LEDs H1 to H4.

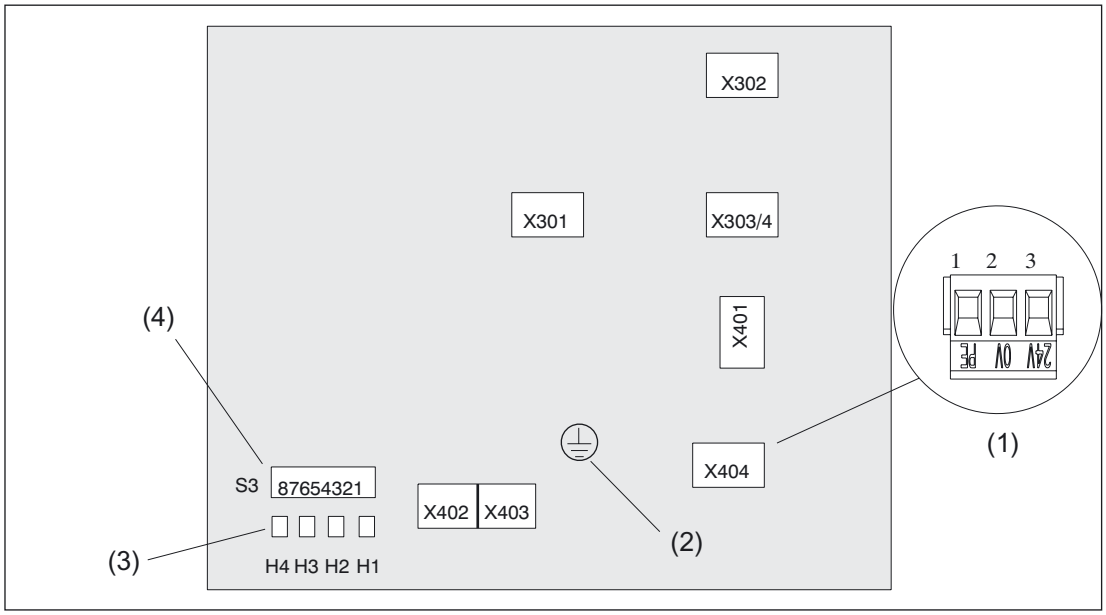

Figure 15-5 Rear of machine control panel (MCP 416C-M and MCP416C-T)

(1) X404 power supply unit (detailed view)
(2) Ground connection (M5 threads)
(3) Status LEDs
(4) Programming switch

The meaning of the status LEDs and assignment of DIP-fix switch S3 is given in the tables below.

Table 15-1 Meaning of status LEDs

No.	Color	Meaning
H1	Red	Hardware faults
H2	Red	Temperature error
H3	Green	Power OK
H4	yellow	Interface operator panel front active

Table 15-2 Assignment of DIP Fix switch S3

No.	Meaning	Default	
		Setting	Value
1	Baud rate	ON	1.5 Mbaud
2	Cycle	OFF	Cyclic transmit time frame: 100 ms Receipt monitoring: 1200 ms
3		ON	
4	Bus address	OFF	6
5		ON	
6		ON	
7		OFF	
8	HW platform	OFF	Standard hardware

Threaded bolt

Welded threaded bolts are used instead of drill-holes with press-in sleeves are used to secure the operator panel front and the MCP.

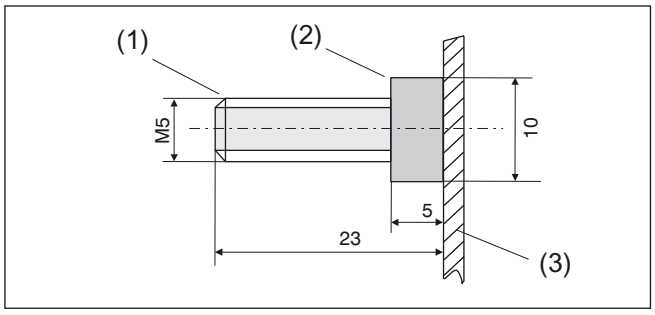

Figure 15-6 Bolt for securing operator panel front and MCP

(1) Threaded bolt M5
(2) Spacer ring
(3) Front panel

EMERGENCY STOP key

The emergency stop key wiring is shown in the block diagram below.

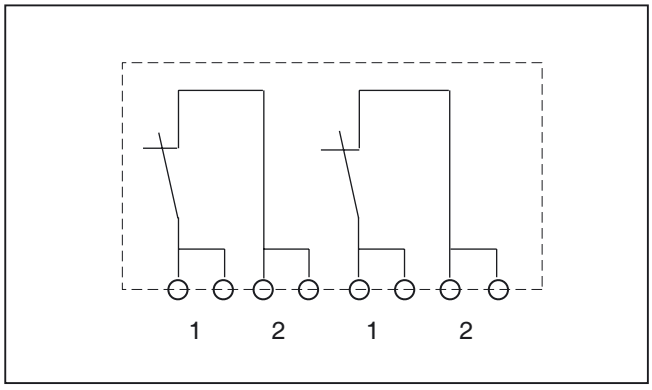

Figure 15-7 Block diagram of emergency stop button

MCP 416C-T

The MCP 416C-T only differs from the MCP 426C-M in that it has

- a handwheel in place of the second override switch and
- different keys.

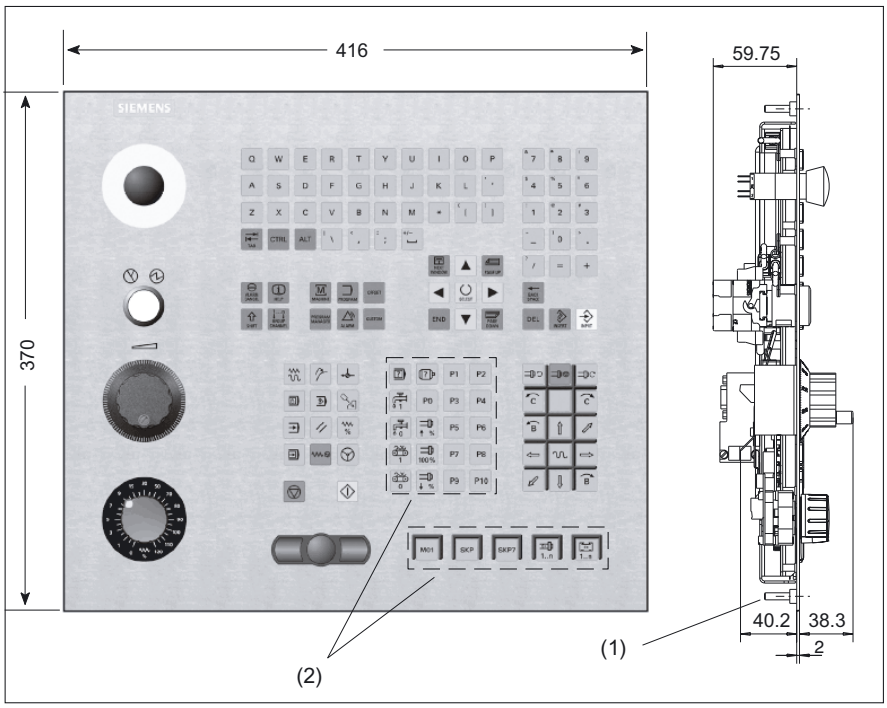

Figure 15-8 MCP 416C-T

(1) Threaded bolt M5 (for detailed view, see "Threaded Bolts")
(2) Exchangeable key caps

The MCP 416C-T is supplied with 30 exchangeable key caps (color: light basic). The printed symbols and there meaning are given in the table below.

Symbol	Meaning	Symbol	Meaning
	Pick-up (7136)		Conveyor belt (7138)
	Minus (7111)		Plus (7112)
	Program control (7141)		Revolver (7092)
	Revolver_2 (7095)		Chuck_4 (7147)
	Spindle (7148)	P8	P8 (7068)
	Revolver_1 (7094)		Teststop_Safety (7149)
	Workpiece_counter (7152)		Tool_monitor_Artis (7136)
	Control_switching (7137)		Workpiece_time (7153)
	Oil_trap (7140)	P1	P1 (7055)
P7	P7 (7067)	P2	P2 (7056)
	Tailstock (7143)	P3	P3 (7059)
	Chuck_3 (7146)	P4	P4 (7060)
	Bar_feed (7150)	P5	P5 (7063)
	Workpiece_changer (7093)	P6	P6 (7064)
	Tool_monitor_Leukhardt (7151)		unlabeled

15.1.4.3 Cable

1. **Videolink cable**
   - see section: "Distributed configuration with videolink receiver"
2. **MPI cable**
   - MPI/PROFIBUS cable (cut-to-length) and connector from Siemens
3. **USB connection cable between X203/204 (videolink receiver) and X302 (MCP):**

15.2 Operator controls and indicators

15.2.1 View of function blocks

The figure shows the embedding of the individual components in an overall system with distributed configuration (see Section: "Distributed configuration with videolink receiver")

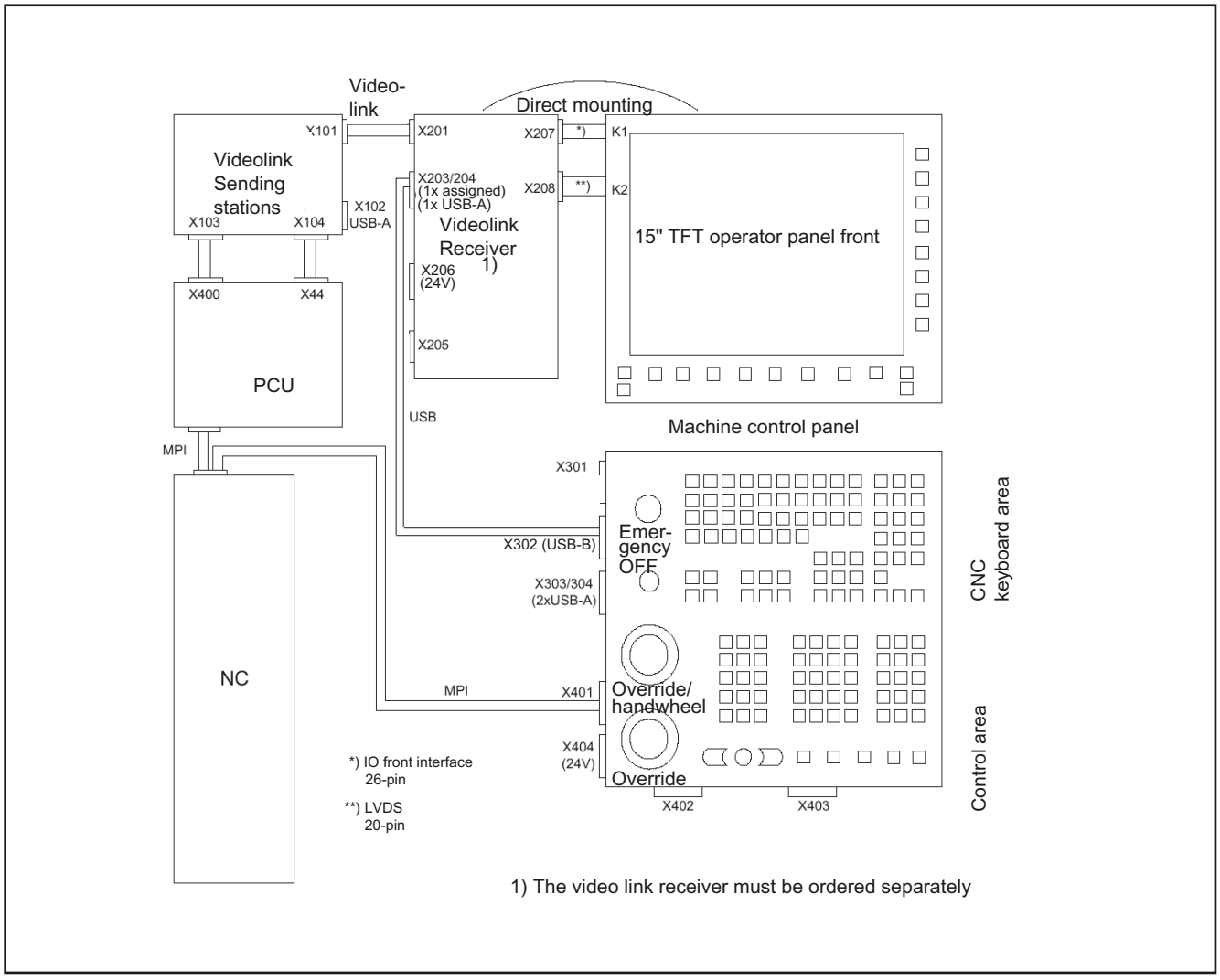

Figure 15-9 Configuration with SINUMERIK 15" TFT operator panel front, 416 mm wide, without integrated videolink receiver

The function blocks of the operator panel front and machine control panel are the subject of this hardware description.

15.2.2 Description of the function blocks

15.2.2.1 Operator panel front

- Control elements: Horizontal and vertical softkeys
- Interfaces: - I/O-interface cable K1 (connector 2 x 13 –pin)
  - Display cable K2 (connector 2 x 10-pole)
- Edge of overlay plate: Up/Down: 18 mm
  right/left: 16 mm
- Attachment: Four welded-on threaded bolts M5
- Seal: To be provided by customer

15.2.2.2 Machine control panel for turning and milling

1. CNC keyboard
   - MF2 keyboard (without function keys)
   - Operating area keys: MACHINE, PROGRAM, OFFSET, PROGRAM MANAGER, ALARM and CUSTOM
   - Other keys: ALARM CANCEL, HELP, GROUP CHANNEL, INSERT, SELECT and NEXT WINDOW
   - Integrated mouse

2. Operating elements of the MCP
   - 54 keys (technology-specific and manufacturer-specific)
   - Turning:
     – 1 x feed override (0 - 120 %, 29 latched positions)
     – 1 x handwheel (100 pulses/revolution), approx. 60 mm wheel diameter
   - Milling:
     – 1 x feed override (0 - 120 %, 29 latched positions)
   - 1 x rapid traverse override (0 -100 %, 23 latched positions)

3. Other Components of the Machine Control Panel
   - 1x EMERGENCY STOP button, 2 x NC contacts (16 mm system)
   - 1 x illuminated key, machine 'ON' (22 mm system)

4. **Interfaces**
   - Inputs:
     - 1 x plug connector (2x5-pole) with lock
     - 1 x USB B 2
     - 1 x MPI interface, Sub-D, 9-pole
     - 1 x 24V power supply: terminal (3-pole)
   - Outputs:
     - 2x USB-A
     - 2 x 4-pole (reserved for optional interfaces, not equipped in series production)

5. **Mounting**
   - Four welded-on threaded bolts M5

6. **Seal**
   - To be provided by customer

15.2.3 Screen saver

If a screen with high contrast is displayed unchanged for longer than 1 hour, the screensaver must be activated (screen switched dark) to protect the TFT display from "burn-in" of the last displayed screen.

For more information see:

/BEM/: HMI Embedded Operator's Guide

/IAM/: IM2 Installation and Start-up HMI Embedded; IM4 Installation and Start-up HMI Advanced

CAUTION
You may do irreversible damage to your TFT display if the screen saver is not activated.

15.3 Interfaces

15.3.1 Hardware

15.3.1.1 Overview

Table 15-3 Overview of hardware interfaces

Interfaces			
Type	**Function**	**Designation**	**Type**
Operator panel front	I/O interface cable	K1	Connector 2 x 13-pole
	Display interface cable	K2	Connector 2 x 10-pole
MCP	USB input	X301	Plug connector, 2 x 5-pole
	USB input (reserved – as an option to X301)	X302	USB-B
	USB output	X303	USB-A
	USB output	X304	USB-A
	MPI	X401	SUB-D, 9-pole
	Option interface (input reserved)	X402	Plug connector, 1 x 4-pole
	Option interface (input reserved)	X403	Plug connector, 1 x 4-pole
	24V voltage supply	X404	Terminal 3-pole

Signal types

Meaning of the abbreviations in table column "Signal type" for the connector interface assignments of the individual components:

- **I** Input
- **O** Output
- **B** Bi-directional
- **V** Power supply

15.3.1.2 Interface assignment for operator panel front

IO/USB and LVDS interface

Connecting cables K1 and K2 between the control panel front and the videolink receiver (s. Fig. in Section: "Control and Display Elements" --> "View of Function Blocks")

For details of the pin assignment of the IO/USB and LVDS interfaces, see Section: "Connection Conditions".

15.3.1.3 Interface assignment for MCP

X301 / X302

The two interfaces X301 and X302 (s. Fig. Section: "Operating and display elements" →"View of function blocks") are switched in parallel and designed as a "high powered interface" with max. 500 mA, 5 V.

- X301 is not assigned.
- The connection between the keyboard and videolink receiver (X203/204) is established via X302.

> **⚠ CAUTION**
>
> These two interfaces must **not** be used simultaneously because they are connected in parallel.

Connector designation: X301; plug connector 2 x 5-pole with lock

Table 15-4 X301 pin assignments

Pin	Signal name	Signal type	Meaning
1	P5	V	Power supply 5 V
2	USB_P	B	Data +
3	USB_M		Data-
4/5	M (GND)	V	Ground
6/7/8	N.C.	-	Unassigned
9	N.C.	-	Unassigned
10	N.C.	-	Unassigned

Connector designation: X302; USB-B connector (4-pole)

Table 15-5 X302 pin assignments

Pin	Signal name	Signal type	Meaning
1	P5	V	+ 5 V power supply for external USB device
2	USB_DM0	B	Data-; channel 0
3	USB_DP0		Data+; channel 0
4	M (GND)	V	Ground

X303 / X304

X303 / 304 are used to connect simple USB expansions such as a USB mouse or USB keyboard and are designed as a "low powered interface" with max. 100 mA, 5 V.

Connector designation: X303; USB-A connector, 4-pole

Table 15-6 X303 pin assignments

Pin	Signal name	Signal type	Meaning
A1	1P5	V	+ 5 V power supply for external USB device
A2	USB_DM2	B	Data-; channel 2
A3	USB_DP2		Data+; channel 2
A4	M (GND)	V	Ground

Connector designation: X304; USB-A connector, 4-pole

Table 15-7 X304 pin assignments

Pin	Signal name	Signal type	Meaning
B1	2P5	V	+ 5 V power supply for external USB device
B2	USB_DM3	B	Data-; channel 0
B3	USB_DP3		Data+; channel 0
B4	M (GND)	V	Ground

X401 (MPI)

The MCP is connected to the MPI of the NC by means of interface X401.

Connector designation: X401; 9-pole Sub-D socket

Table 15-8 X401 pin assignments

Pin	Signal name	Signal type	Meaning
1/2	N.C.		Unassigned
3	RS_OPI	B	RS-485 data
4	ORTSAS_OPI	O	Output Request to Send, user interface
5	M5EXT	V	5 V external ground
6	P5EXT		5 V external potential
7	N.C.		Unassigned
8	XRS_OPI	B	RS-485 data
9	IRTSPG_OPI	I	In Request to Send PG

X402 / X403

Option

X404 (power supply)

Connector designation:	X404; 3-pole Phoenix terminal block (see Section: "Mechanical Design" → Diagram: "Back of machine control panel")

Table 15-9 Assignments of connector X404

Pin	Signal name	Signal type	Meaning
1	PI	V	Shield connection
2	0 V		Ground
3	24V		Power supply +24 V

15.3.2 Software

Key layout of the MCP

Layout of the machine control keys (applies to "turning" and "milling")

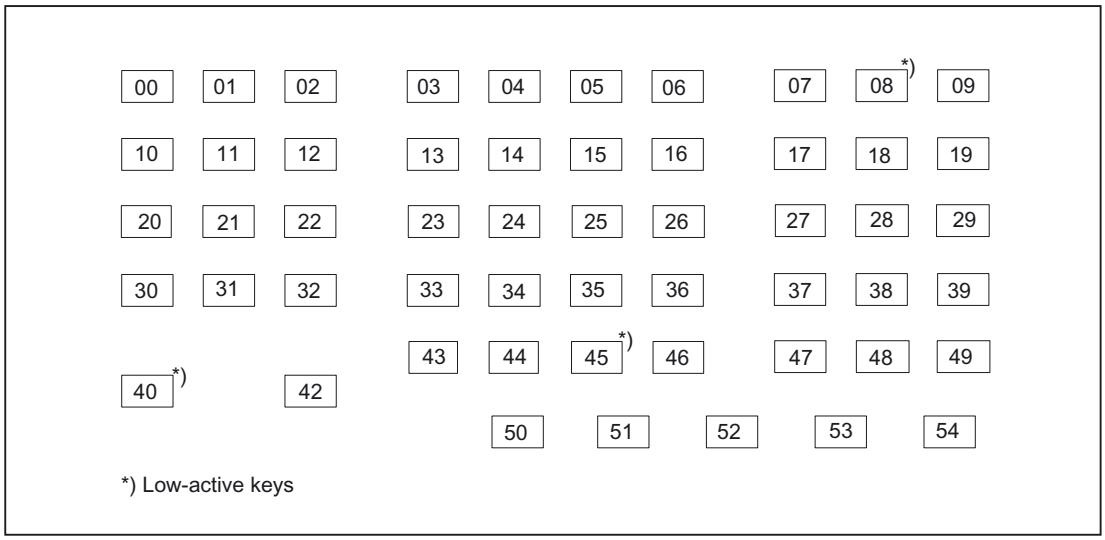

15.4 Mounting

Procedure

1. Insert the operator panel front and the machine control panel with their four threaded bolts into the mounting holes of the prepared panel cut-out [**(A)** and **(B)**].

   The spacer rings on the threaded bolts ensure that the rubber seal is not squashed when installed (required to ensure degree of protection IP54; not included in scope of delivery).
2. Secure the components from the rear side using the M5 nuts and suitable circlips (torque 1.8 Nm).
3. Make the ground connections **(C)**.
4. Connect the interfaces, except X404 **(C)**.
5. Connect X404 to the 24 V power supply**(C)**.

(A)

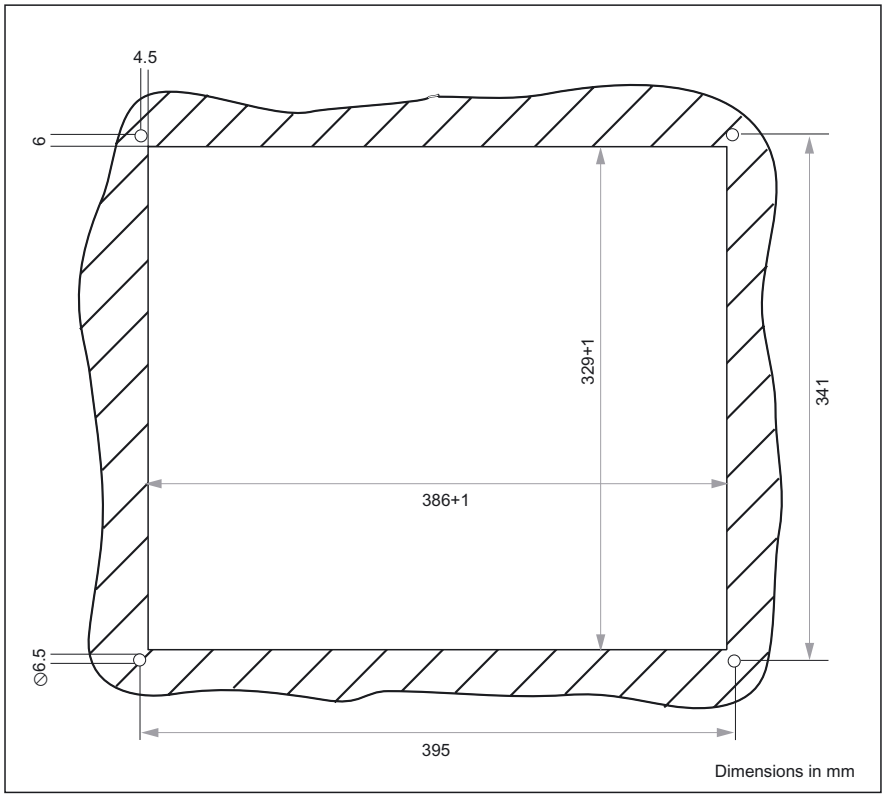

Panel cutout for operator panel front

(B)

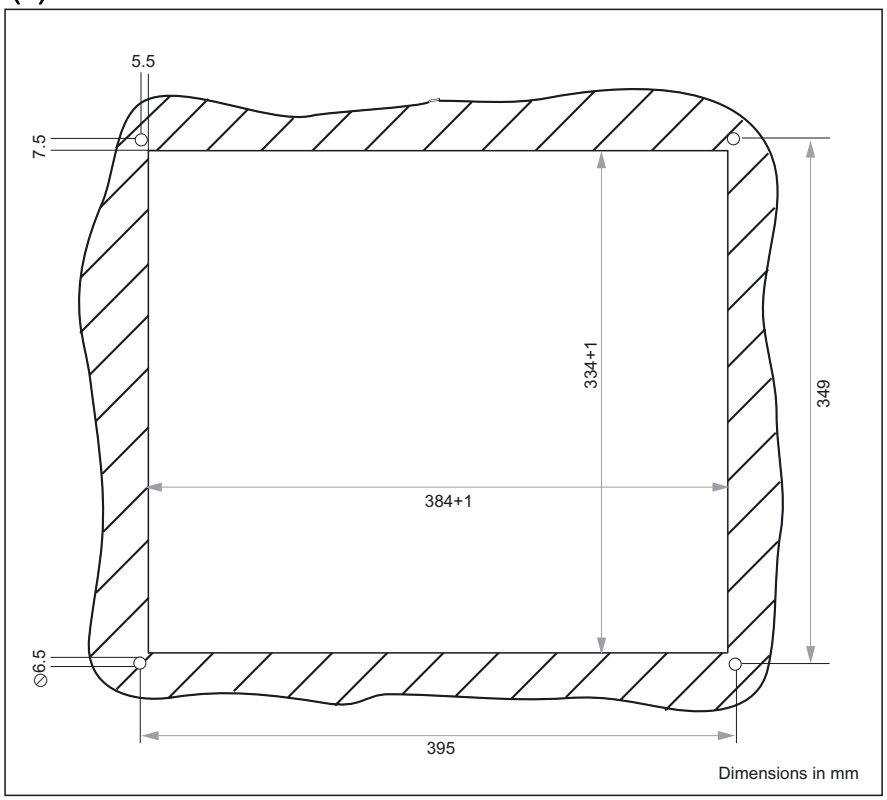

Figure 15-10 Panel cutout for machine control panel

(C)

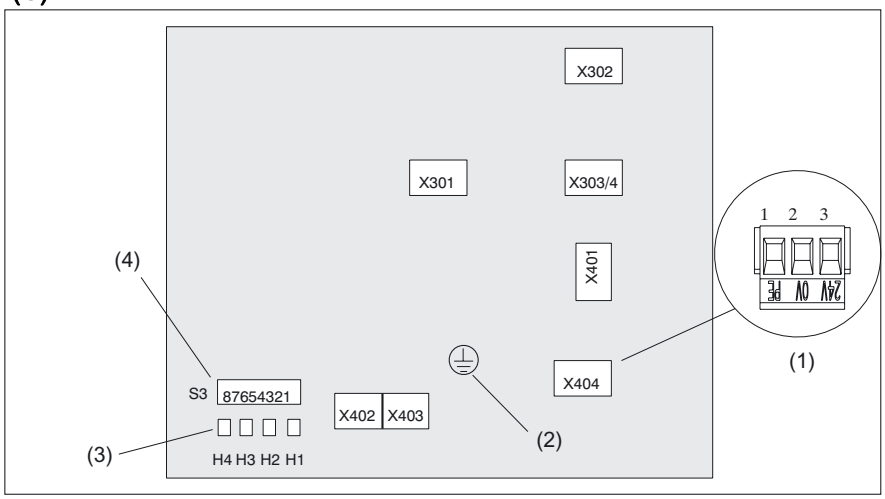

Figure 15-11 Rear of machine control panel (MCP 416C-M and MCP 416C-T)

(1) X404 (power supply) (detailed view)
(2) Grounding connection (M5 threads)
(3) Status LEDs
(4) Programming switch

15.5 Technical specifications

15.5.1 Operator panel front

Security			
Safety class	III; PELV acc. to EN 50178		
Degree of protection per EN 60529	Front panel IP54	Rear side IP 00	
Approvals	CE / UL		
Electrical specifications			
Power supply (via I/O USB cable and display cable)	Display	Backlight inverter	Logic / USB (with / without load)
Voltage Current (typ./max. mA; approx.)	5 V +/- 5% 420 / 600	12 V +/- 10% 900 / 1050	5.2 V +/- 2% 350 / 1000
Power consumption	Typical, approx. 15 W	Maximum approx. 24 W	
Mechanical data			
Dimensions	Width: 416 mm	Height: 382 mm	Depth: 59.5 mm
Weight	Approx. 6 kg		
Tightening torques, max.	Tension jack screws: 0.5 Nm	Weld bolts: M3: 0.45 Nm / M4: 1 Nm M5 : 1.8 Nm	
Mechanical ambient conditions (with PCU)	**Operation**	**Transport** (in transport packaging)	
Vibratory load	10 -58 Hz: 0.075 mm 58 -200 Hz: 9.8 m/s^2 3M4 per EN 60721-3-3	5 -9 Hz: 3.5 mm 9 -200 Hz: 9.8 m/s^2 2M2 per EN 60721-3-2	
Shock stressing	50 m/s^2, 30 ms, 18 shocks 3M2 per EN 60721-3-3	300 m/s^2, 6 ms, 18 shocks 2M2 to EN 60721-3-2	
Climatic ambient conditions			
Cooling	By natural convection		
Condensation, spraying water and icing	Not permitted		
Supply air	Without caustic gases, dusts and oils		
	Operation	**Storage/shipping** (in transport packaging)	
Applicable standards	EN 60721-3-3	EN 60721-3-1 / -3-2	
Climate class	3K5	1K3 / 2K4	
Temperature limits	0 ... 45 ºC (at front) 0 ... 55 ºC (at rear)	-25 ... 55 ºC	
Temperature change	Max. 10 K/h	Max. 18 K/h	
Limits for relative humidity	5 ... 80%	5 ... 95%	

Limits for relative humidity	5 ... 80%	5 ... 95%
Permissible change in the relative air humidity	max. 0.1% /min	
Display		
Size / resolution	15 " TFT / 1024 x 768 pixels	
MTBF backlight	typ. 50 000 h at 25 ºC (dependent on the temperature)	

15.5.2 Machine control panel

Security		
Safety class	III; PELV acc. to EN 50178	
Degree of protection per EN 60529	Front panel IP54	Rear side IP 00
Approvals	CE / UL	
Electrical specifications		
Input voltage	DC 24 V	
Power consumption, max.	2 W	
Mechanical data		
Dimensions	Width: 416 mm Height: 370 mm	Depth MCP-M: 84 mm Depth MCP-T: 100 mm
Mechanical ambient conditions (with PCU)	**Operation**	**Transport** (in transport packaging)
Vibratory load	10 -58 Hz: 0.015 mm 58 -200 Hz: 19.6 m/s^2 3M4 per EN 60721-3-3	5 -9 Hz: 3.5 mm 9 -200 Hz: 9.81 m/s^2 2M2 per EN 60721-3-2
Shock stressing	150 m/s^2, 11 ms, 18 shocks 3M2 per EN 60721-3-3	150 m/s^2, 11 ms, 18 shocks 2M2 per EN 60721-3-2
Climatic ambient conditions		
Cooling	By natural convection	
Condensation, spraying water and icing	Not permitted	
Supply air	Without caustic gases, dusts and oils	
	Operation	**Storage/shipping** (in transport packaging)
Applicable standards	EN 60721-3-3	EN 60721-3-1 / -3-2
Climate class	3K5	1K3 / 2K4
Temperature limits	0 ... 45 ºC (at front) 0 ... 55 ºC (at rear)	-25 ... 55 ºC
Temperature change	Max. 10 K/h	Max. 18 K/h
Limits for relative humidity	5 ... 80%	5 ... 95%
Permissible change in the relative air humidity	max. 0.1% /min	

15.6 Replacement parts

15.6.1 Overview

Name	Description	Order number (MLFB)
Hand wheel	Handwheel for machine control panel, width 416mm, T-version	6FC9320-5DM00
Rotary switch rapid traverse	1x23G, T=32, cap, button, pointer and dial	6FC5247-0AF21-0AA0
Rotary switch for feed	1x29G, T=32, cap, button and pointer	6FC5247-0AF21-0AA0
Mouse	USB mouse for front	6FC5247-0AF01-0AA0
Emergency stop	Button	3SB2000-1AC01
	Holder	3SB2908-0AA
	Switching element	3SB2404-0C
Illuminated pushbuttons	Complete	3SB3001-0AA71
	Switching element	3SB3400-0A
	Switching element with lamp	3SB3400-1D
Key covers with label fields	1 set of 90, ergo-gray and 20 each of red / green / yellow / mid-gray	6FC5248-0AF12-0AA0

15.6.2 Replacement

15.6.2.1 Hand wheel

Removing the handwheel

1. Loosen the grub screw (1) of the rotary button (6).
2. Pull the rotary button from the shaft.
3. Remove lock nut M15 (2).
4. Remove the washer.
5. Pull the handwheel backward out of the front plate.
6. Remove the wiring.

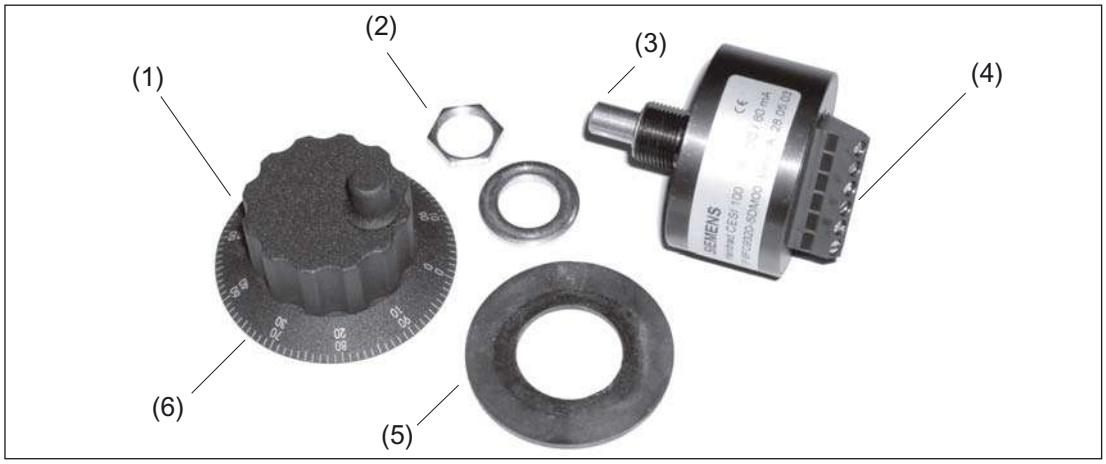

Figure 15-12 Mounting kit for handwheel

(1) Grub screw (socket-head) – not visible
(2) M15 lock nut
(3) Handwheel shaft
(4) Connection terminals
(5) Seal
(6) Rotary knob

Installing the handwheel

Installation is performed in the reverse order.
Make sure the seal is correctly positioned (5).

15.6.2.2 Rotary switch

Removing the rotary switch

1. Lever the cover (6) off of the rotary button (2) (snap-on connection!).
2. Remove the nut of the collet (1) with a wrench (width 10).
3. Remove the entire rotary button (2).
4. Remove the lock nut (4) on the shaft of the rotary switch (3) with a wrench (width 14).
5. Remove the connector on the end of the rotary switch cable from the socket.
6. Remove the rotary switch

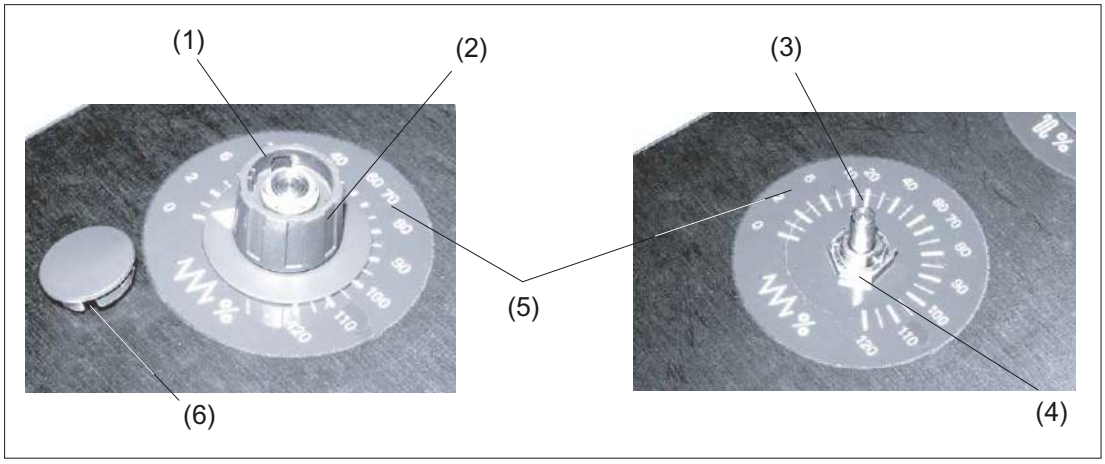

Figure 15-13 Removal of rotary switch

(1) Nut of the collet
(2) Rotary knob
(3) Rotary switch shaft
(4) Lock nut
(5) Scale
(6) Cap

Installing the rotary switch

1. Push the O-ring (1) onto the shaft of the new rotary switch as a seal.
2. Insert the rotary switch into the front cutout so that pressure is applied to the O-ring.
3. Screw the lock nut (4) on the shaft of the rotary switch from the front with a wrench (width 14).
4. Connect arrow ring (2) and rotary button (5).
5. Slide both parts onto the shaft of the rotary switch.
6. Tighten the collet nut of the rotary button with a wrench (width 10). Align the arrow point on the ring with position "0" on the scale.
7. Place the cover (3) on the rotary button and snap it into position.
8. Fold and fasten the connecting cable (6) as shown in the figure on the right.

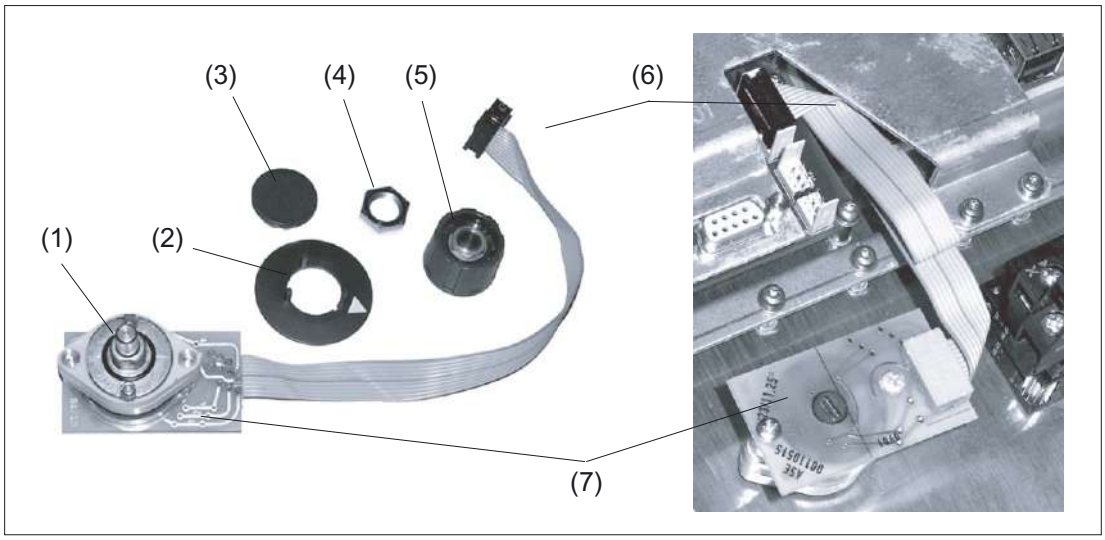

Figure 15-14 Installation of rotary switch

(1) O-ring
(2) Arrow ring
(3) Cap
(4) Lock nut
(5) Rotary knob
(6) Connecting cable
(7) Terminal board

When installing the second rotary switch, proceed in the same manner.
The recommended folding method for the cables is shown in the figure.

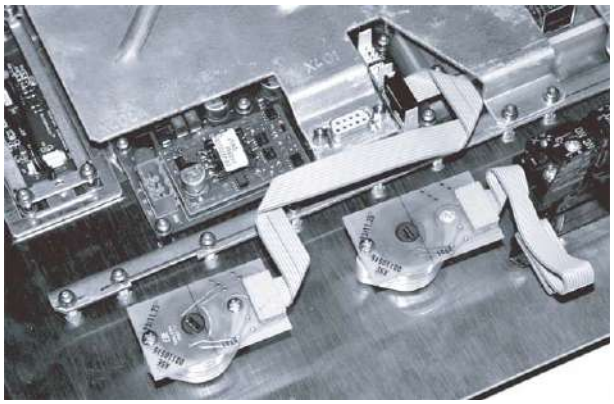

Figure 15-15 Both rotary selector switches installed (top switch [right] not yet connected)

15.6.2.3 Mouse

Removing the mouse

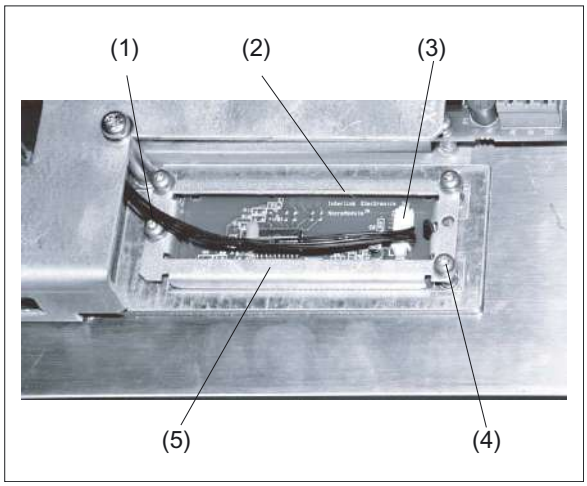

Figure 15-16 Mouse prior to removal

(1) Connecting cable
(2) Mouse board
(3) Cable connector
(4) Mounting screw
(5) Retainer frame

1. Remove the cable connector (3) from the mouse (2).
2. Loosen the four fixing screws M3x6 (4) on the retaining frame (5) using Torx screwdriver T10.
3. Remove the retaining frame.
4. Lift the mouse out of the front panel.

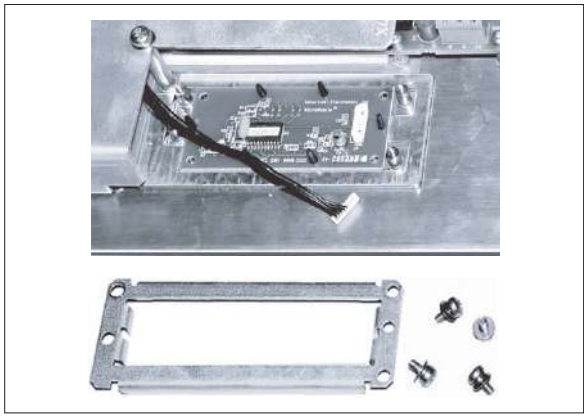

Figure 15-17 Mouse fastening released

Installing the mouse

The mouse is installed in reverse order.
Ensure the alignment is correct based on the mouse symbol.

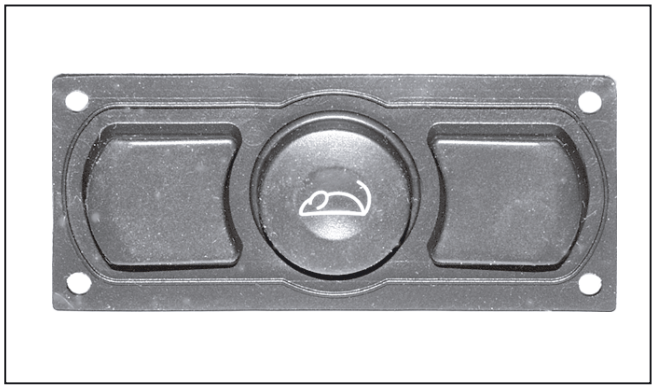

Figure 15-18 Removed mouse

Direct control key module

16

16.1 Description

The task of the direct control key module (DKM) is to directly transfer the operating signals for the two rows of keys on the sides of an operator panel front to SIMATIC without diversion through intermediate firmware. The signal-to-key assignments are shown in the table and figure in section: "Interfaces" → "Operator panel front."

The DKM can be combined with operator panel fronts of type OP 012, OP 012T, OP 015A or TP 015A.

The DKM converts the key signals to the PROFIBUS DP protocol by means of the ASIC LSPM2 (PROFIBUS DIN 19245 Part 1, 12 MBaud).

Power is supplied via the operator panel front. The PROFIBUS is completely isolated from the DKM/operator panel front by means of an opto-coupler and DC/DC converter.

The DKM operates as a slave on PROFIBUS. The address can be set between 1 and 99 using rotary switches. Two bytes of data are transferred.

In SIMATIC, the keys are handled as if they were 16 ordinary digital inputs.

Validity

This description applies to the following components

Name	Order number
Direct control key module (with kit for OP 012)	6FC5247-0AF11-0AA0
Direct key module mounting kit for OP 015A, TP 015A and OP 012T	6FC5247-0AF30-0AA0

16.2 Operating and display elements

On the front of the direct key module there are

- coding switches: unit places
- coding switches: decimal places
- LED: Bus error, Not connected
- LED: Diagnostics

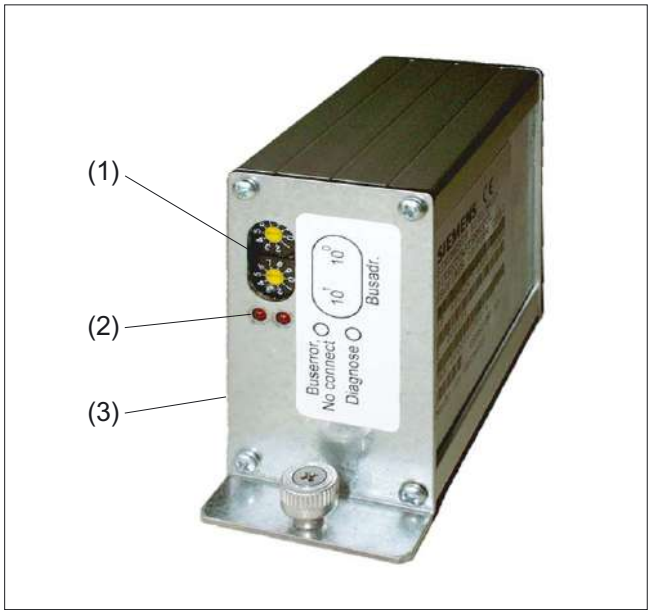

Figure 16-1 Direct control key module complete with coding switches and LEDs

(1) Top coding switches: Units digits
Bottom coding switches: Tens digits

(2) LEDs

(3) Connection for OP 012 cable (not visible)

16.3 Interfaces

The direct control key module has a

- Profibus connection **(1)** and a
- connection for the operator panel front **(2)**.

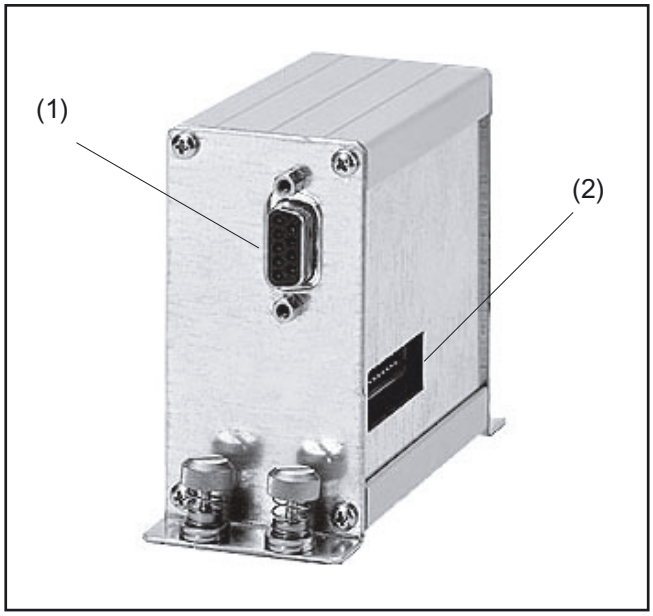

Figure 16-2 Direct control key module with connections

Operator panel connection

The ribbon cable for the operator panel front is inserted through the cut-out in the casing **(2)**.

Here, the switching states of the vertical direct control keys can be picked up without intermediate firmware. These signals can be evaluated in the direct control key module.

Direct control key interface X11 on the keyboard controller for the operator panel front: per DIN 41651, plug connector, cable length max. 0.5 m.

Table 16-1 Assignment of interface X11: 2 x 8 vertical direct control keys

Pin	Name	Type	Remarks
1, ..., 16	DT 1, ..., 16 Data	O	Data output, direct control key #1, ..., 16
17 / 18	PSV_D_fused	V	+ 5 V (fused)
19 / 20	GND		Ground

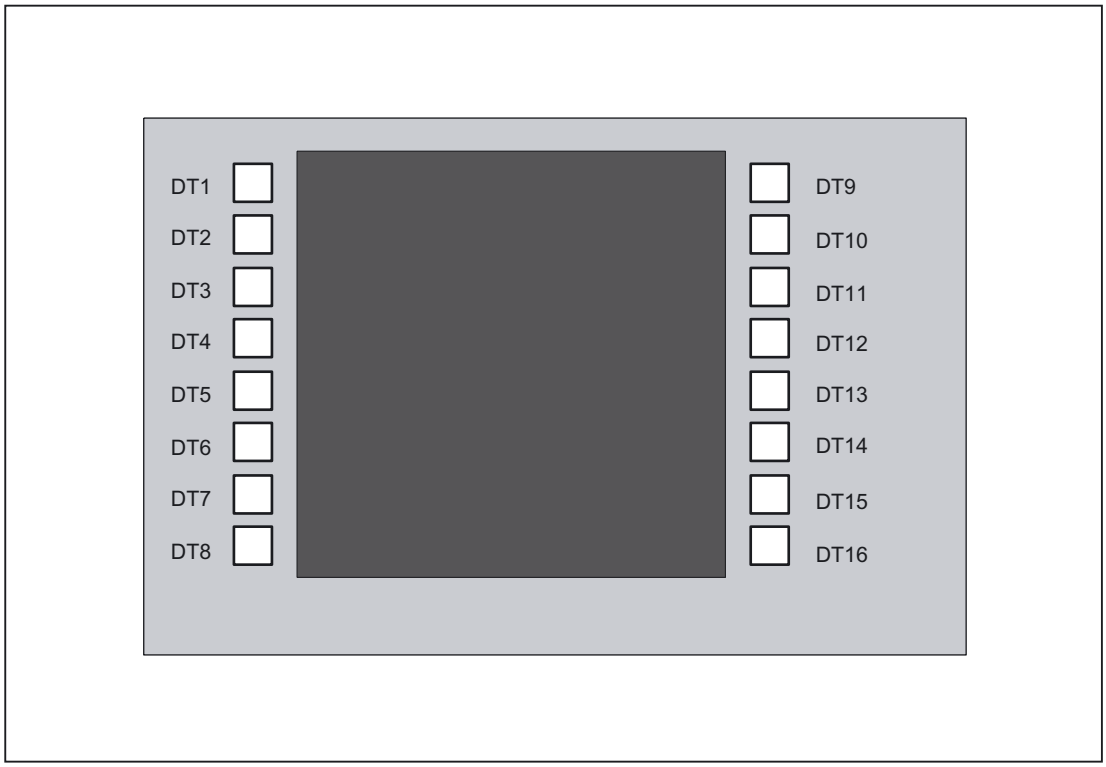

Figure 16-3 Assignment of direct control keys on an operator panel front

PROFIBUS connection

9-pin connector

Note

The Profibus cable used should have a connector with a straight outgoing cable.

16.4 Mounting

16.4.1 Overview

The DKM is installed to one side of the PCU on the operator panel front and connected to the keyboard controller via a short ribbon cable.

Mounting the DKM requires an installation kit appropriate to the operator panel front used (kit for the OP 012 already included with the DKM).

An installation kit is needed for OP 015A and TP 015A (see figure) and this has to be ordered. You will find the order number in section: "Description".

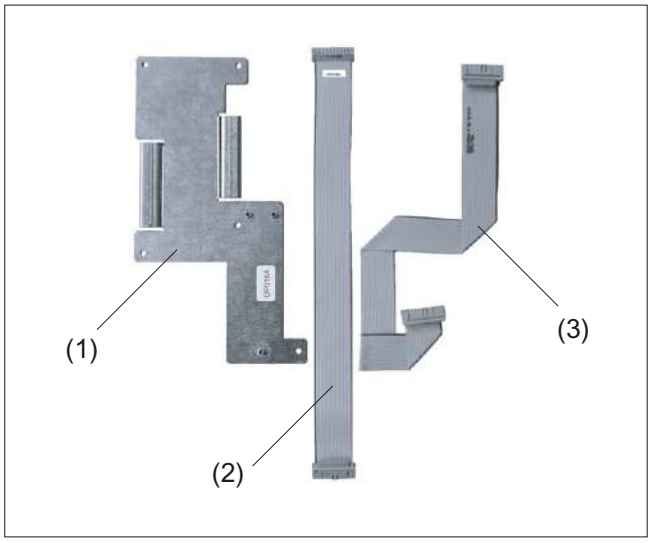

Figure 16-4 DKM installation kit for OP 015A and TP 015A

(1) Cover plate for keyboard controller for OP 015A
(2) DKM cable for OP 015A
(3) DKM cable for TP 015A

16.4.2 Combination with OP 012

The OP 012 outputs the signals from the direct control keys at connector X11**(3)**.

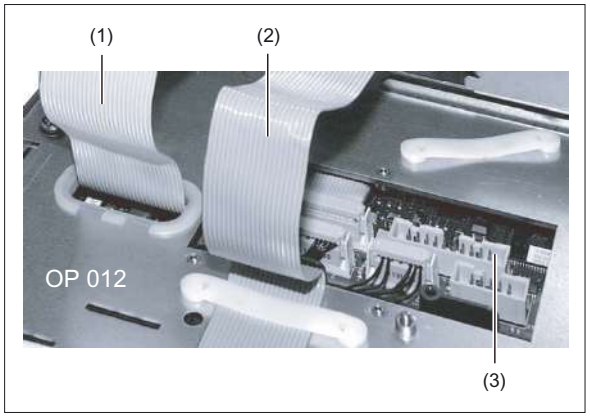

Figure 16-5 Rear side of OP 012

(1) I/O USB cable K1
(2) Display cable K2
(3) Direct control key interface X11

Preparation

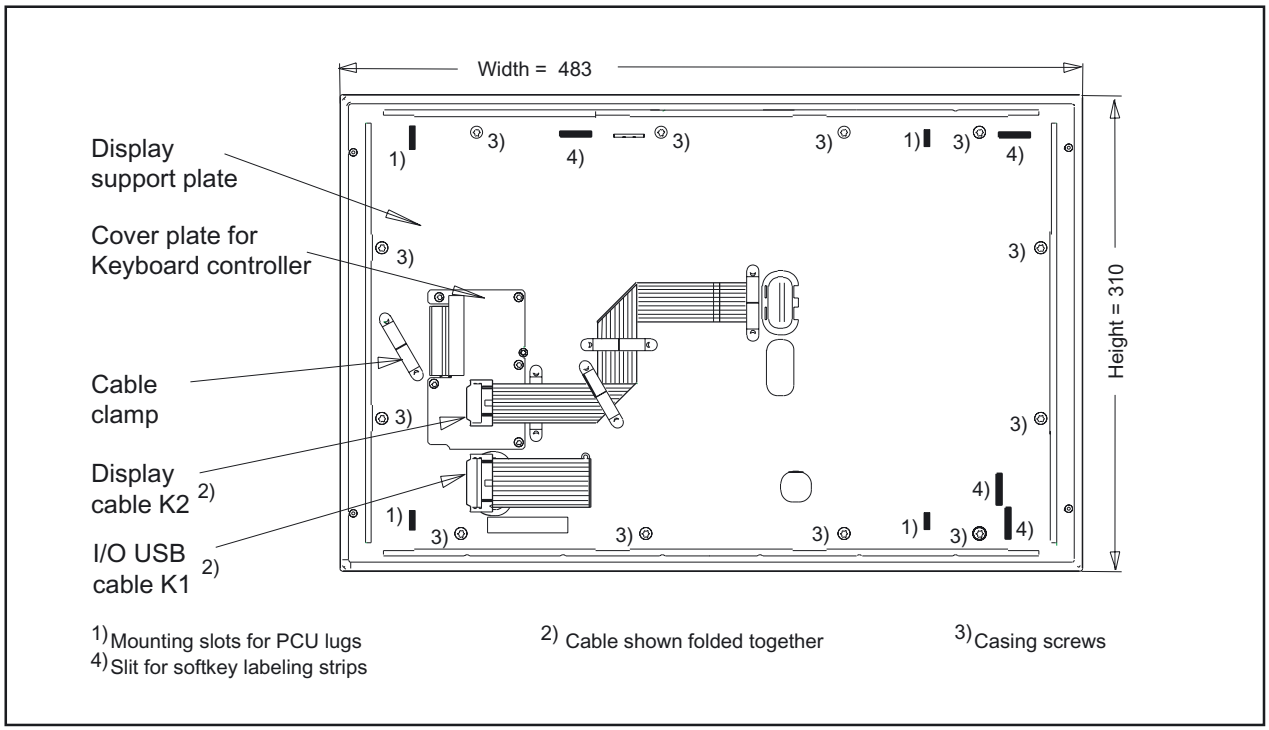

Figure 16-6 Rear side of OP 012

1. Deinstall the PCU (if it is already installed) by removing the knurled-head screws at the four corners and lifting off the PCU.
2. Remove the ribbon cable clamp (1) alongside the keyboard controller cover plate by inserting a pointed tool in each of the two slits and loosening the fixing cams by levering in the direction shown (3).
3. Unscrew the cover plate for the keyboard controller (4). It is no longer needed for assembly.
4. Remove the rubber rim (5) from the edge of the housing cutout (used to secure a pushbutton panel cable).

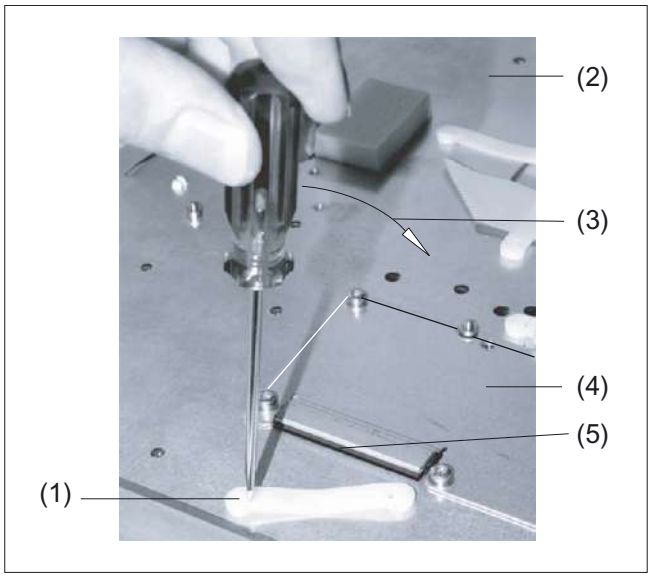

Figure 16-7 Removing the cable clamp from the OP 012

(1) Cable clamp
(2) OP 012
(3) Tipping motion of tool
(4) Previous cover plate
(5) Rubber rim

Assembly

You will find the reference diagrams for the individual mounting stages at the end of the description of the procedure.

1. Insert the non-rubber-coated end of the ribbon cable supplied with the DKM through the slit in the cover also supplied with the DKM and into socket X11 on the keyboard controller.
2. Screw down the new cover tightly using the screws supplied **(A)**.
3. Install the PCU as described in section "OP 012," section: "Mounting."

4. Set Profibus addresses 01 to 99 using the top (units) and bottom (tens) coding switches of the DKM (see Fig. in section: "Operating and display elements").
5. Connect the ribbon cable to the DKM **(B)**.
6. Screw the DKM firmly to the cover using the knurled screws on the side.
7. Insert the Profibus plug (with straight outgoing cable) into the socket of the DKM **(C)**.

If the DKM is not connected to Profibus connector (or in the event of another fault), the "bus error" LED lights up.

Note

The direct control key module must be removed first on deinstallation of the PCU.

(A)

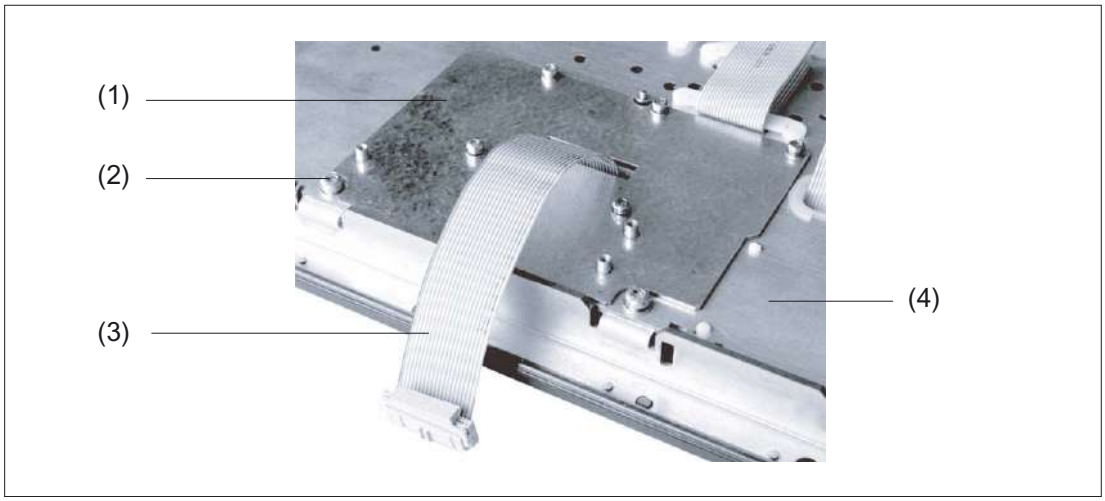

Figure 16-8 Installation of the direct control key module on the OP 012

(1) New cover plate
(2) Securing nipple for DKM (1 of 3)
(3) Cable to direct control key module
(4) OP 012

(B)

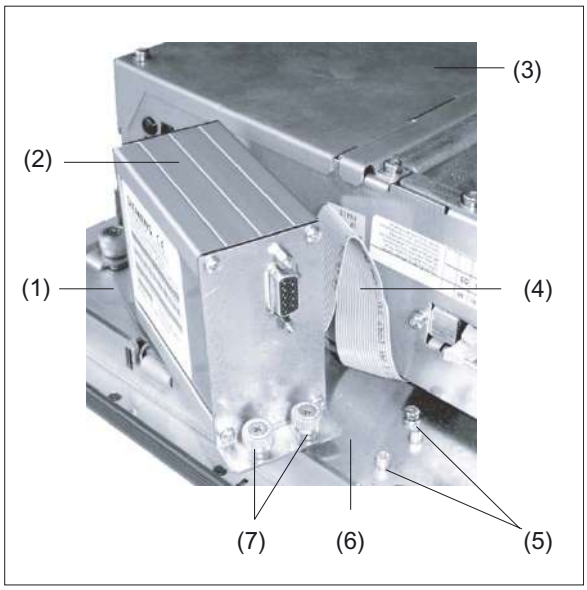

Figure 16-9 Installation of the direct control key module on the OP 012

(1) OP 012
(2) Direct control key module
(3) PCU 50
(4) Cable from OP 012 to DKM
(5) Securing nipple for DTM
(6) Cover plate
(7) Retaining screws

(C)

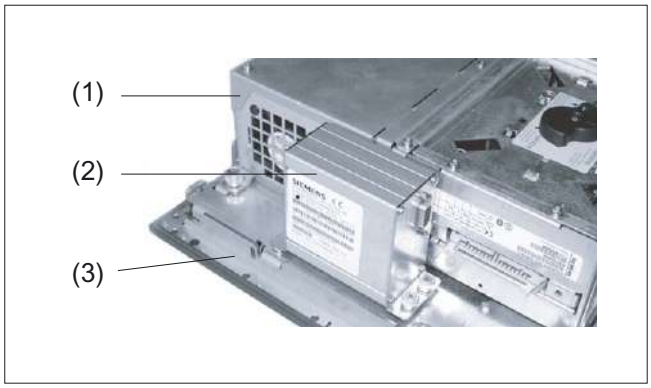

Figure 16-10 Pre-installed direct control key module

(1) PCU 50
(2) DKM
(3) OP 012

16.4.3 Combination with OP 015A

Preparation

1. Deinstall the PCU (if it is already installed) by removing the knurled-head screws at the four corners and lifting off the PCU.
2. Unscrew the cover plate for the keyboard controller (see figure).

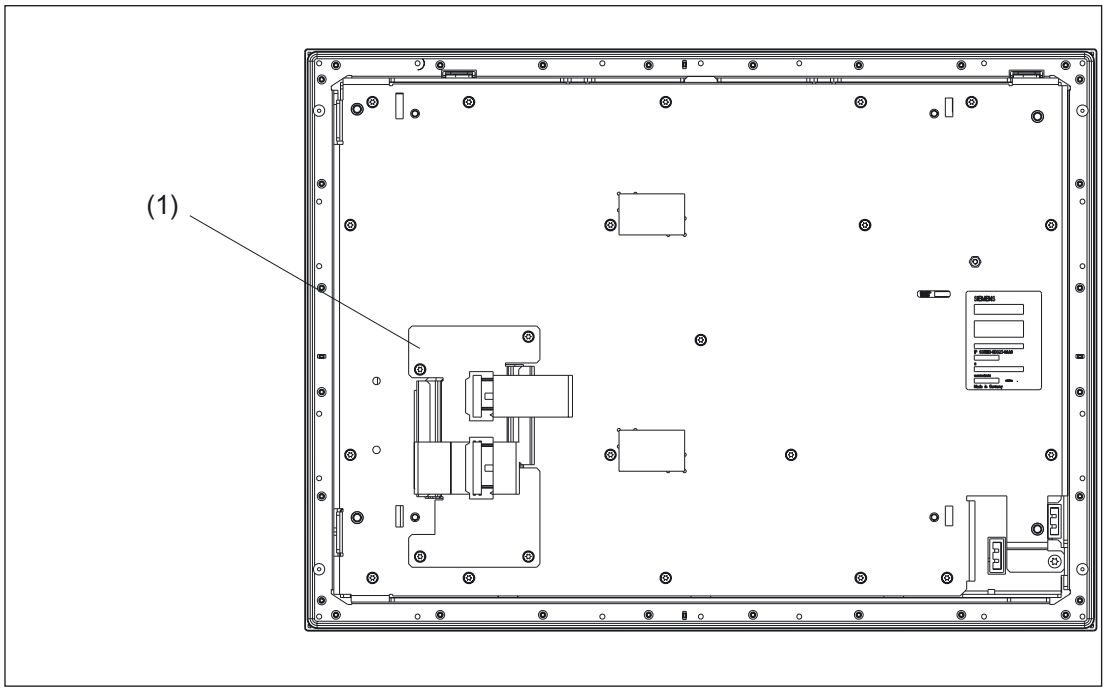

Figure 16-11 OP 015A rear side

(1) Cover plate for keyboard controller

Assembly

You will find the reference diagrams for the individual mounting stages at the end of the description of the procedure.

1. Insert the non-rubber-coated end of the DKM ribbon cable (figure in section: "Mounting" → "Overview") in socket X11 of the keypad controller **(A)**. Note the fold!
2. Screw down the cover plate supplied with the installation kit and labeled "OP 015A".
3. Fold the DKM cable as shown in **(B)**.
4. Fit the PCU as described in Chapter: “OP 012”, section: "Mounting".
5. Set Profibus addresses 01 to 99 using the top (units) and bottom (tens) coding switches of the DKM (see Fig. in section: "Operating and display elements").

6. Connect the ribbon cable to the DKM **(C)**.
7. Screw the DKM firmly to the keyboard controller cover plate using the knurled screws.

(A)

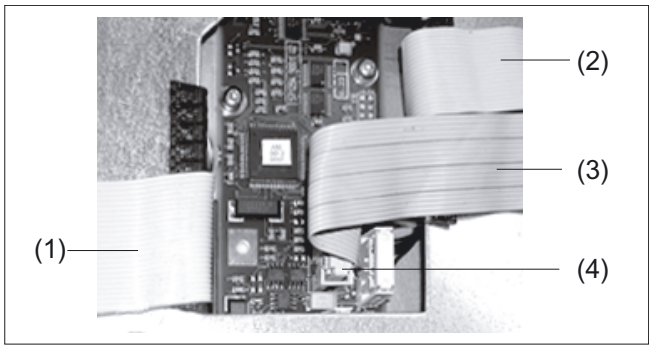

Figure 16-12 OP 015A: Keyboard controller connections

(1) Display cable K2
(2) I/O USB cable K1
(3) Direct control key cable
(4) Direct control key interface X11

(B)

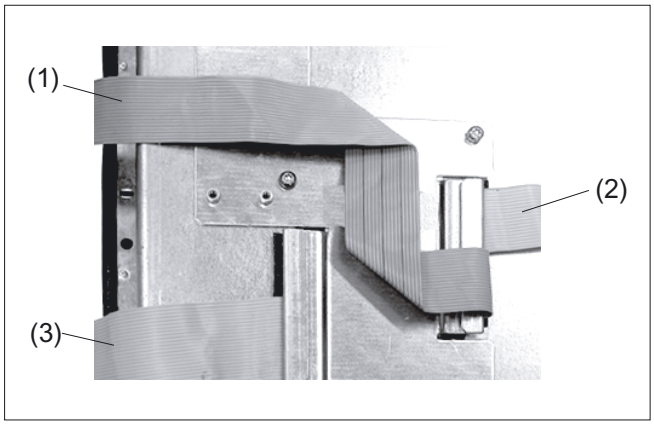

Figure 16-13 OP 015A: DKM cable routing

(1) DKM cable
(2) I/O USB cable K1
(3) Display cable K2

(C)

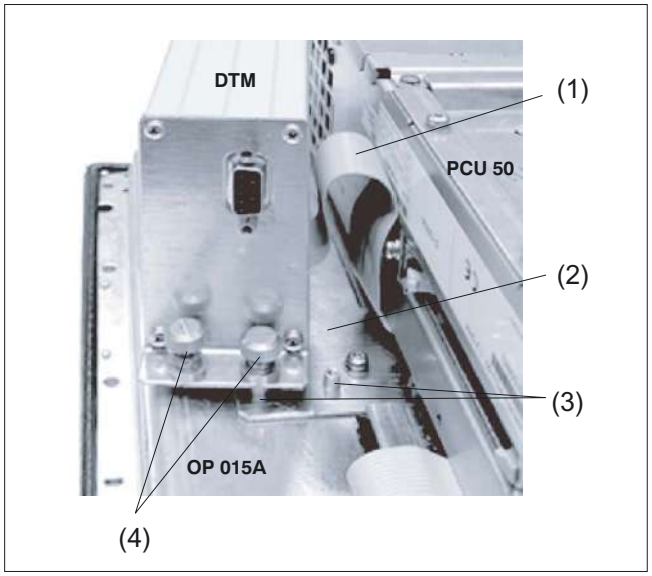

Figure 16-14 Installation of the direct control key module on the OP 015A

(1) Cable from TP 013A to direct control key module
(2) Cover plate for keyboard controller
(3) Securing nipple for direct control key module
(4) Retaining screws

16.4.4 Combination with TP 015A

Preparation

1. Deinstall the PCU (if it is already installed) by removing the knurled-head screws at the four corners and lifting off the PCU.
2. Unscrew the cover plate for the keyboard controller (see figure).
   The plate is required for re-installation.

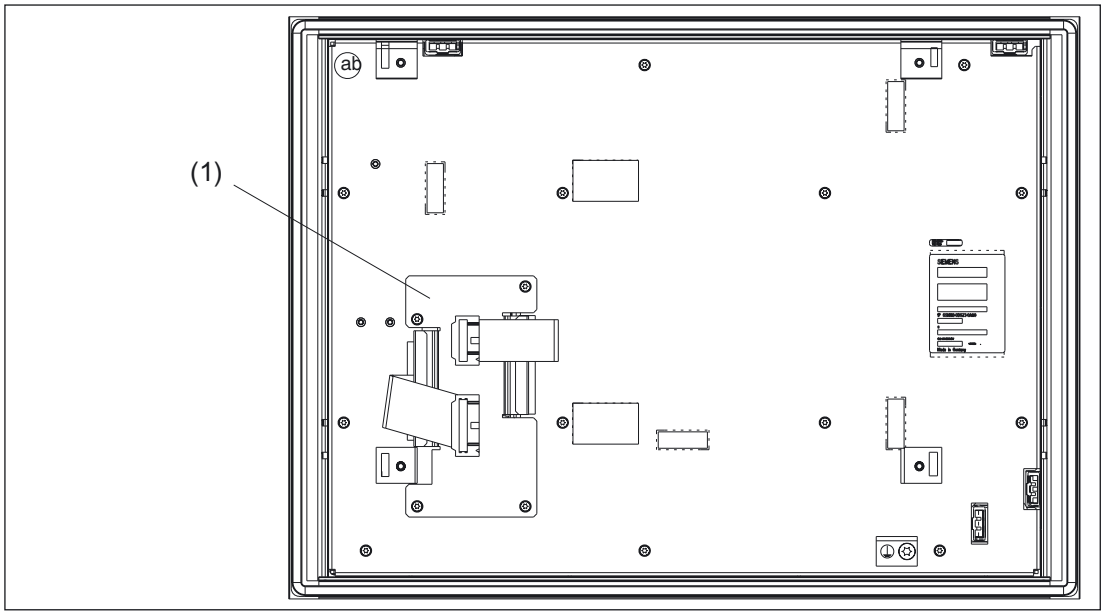

Figure 16-15 TP 015A rear side

(1) Cover plate for keyboard controller

Assembly

You will find the reference diagrams for the individual mounting stages at the end of the description of the procedure.

1. Insert the DKM ribbon cable into socket X11 of the keyboard controller **(A)**
   The cable has already been folded **(B)**.
2. Tighten the screws in the cover plate. Fold the DKM cable around as shown in **(C)**.
3. Fit the PCU as described in section: “OP 012,” section: "Mounting."
4. Set Profibus addresses 01 to 99 using the top (units) and bottom (tens) coding switches of the DKM (see Fig. in section: "Operating and display elements").
5. Connect the ribbon cable to the DKM **(D)**.
6. Screw the DKM onto the securing nipple with the knurled screws.

Reference diagrams

(A)

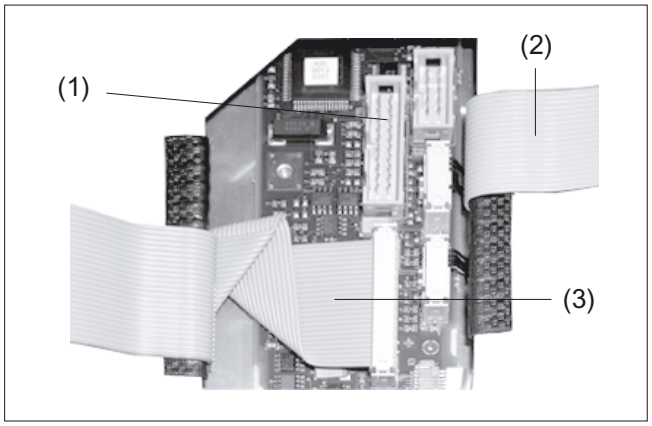

Figure 16-16 TP 015A: Keyboard controller connections

(1) DKM interface X11:
(2) I/O USB cable K1
(3) Display cable K2

(B)

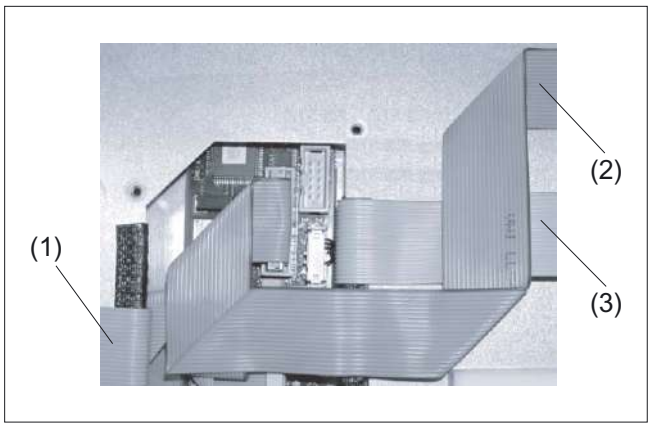

Figure 16-17 TP 015A: DKM cable routing

(1) Display cable K2
(2) DKM cable
(3) I/O USB cable K1

(C)

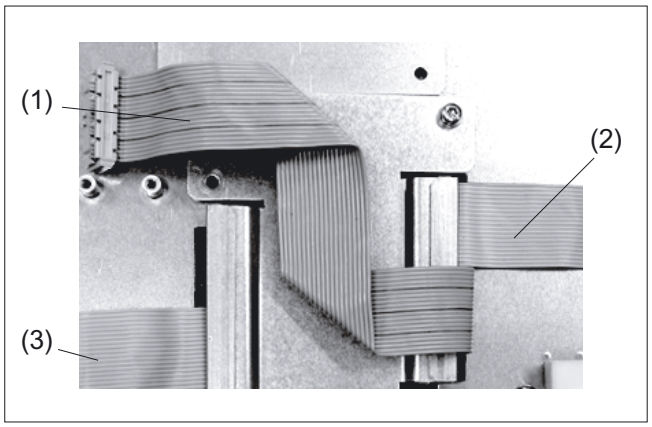

Figure 16-18 TP 015A: Installing the cover plate

(1) DKM cable
(2) I/O USB cable K1
(3) Display cable K2

(D)

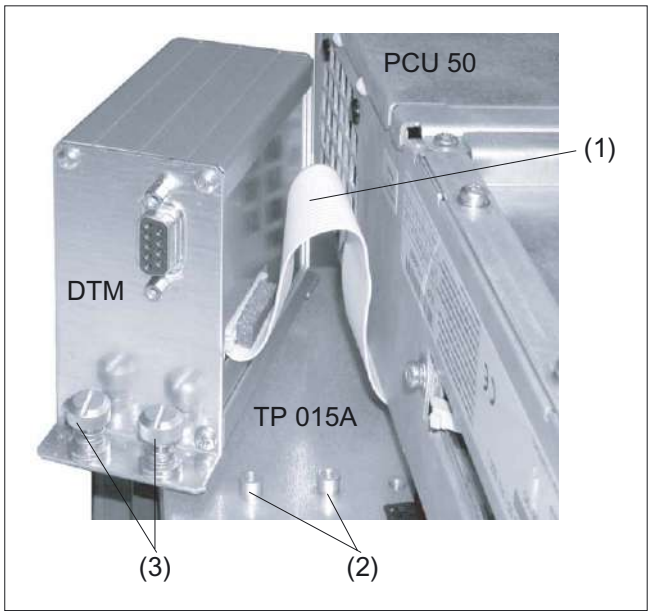

Figure 16-19 Installation of the direct control key module on the TP 015A

(1) Cable from TP 015A to DKM
(2) Securing nipple for direct control key module
(3) Retaining screws

PCU 20

17

17.1 Description

The high-performance SINUMERIK PCU 20 does not need a hard disk and has the communication MPI / PROFIBUS DP already onboard.
The following connections are possible:

- Ethernet (SW option)
- Floppy disk drive

The SINUMERIK PCU 20 is equipped as standard with the HMI-Embedded operator interface software (Simplified Chinese, German, English, French, Italian, Spanish as of SW version 6.5).
Other languages may be ordered separately. You can find information on this in the catalog: HMI software for CNC controls.

The PCU 20 is available in the following variants:

Processor clock speed	User memory (SDRAM)	Onboard FLASH memory	Order No.:
166 MHz	16 MB	8 MB	6FC5210-0DF00-0AA0
166 MHz	32 MB	16 MB	6FC5210-0DF00-0AA1
233 MHz	32 MB	16 MB	6FC5210-0DF00-1AA0
233 MHz	32 MB	16 MB	6FC5210-0DF00-1AA1
266 MHz	32 MB	16 MB	6FC5210-0DF00-0AA2
333 MHz	32 MB	16 MB	6FC5210-0DF00-1AA2

Features

- Rugged, easy-to-service design (continuous operation, high noise immunity)
- Compact construction for space-saving installation
- Single-chip PC processor with embedded operating system
- Linear Flash Memory Card (ATA Flash) or
  Flash Card 100/200 Type I/II, max. 64 MB or
  CompactFlash Card (Type I/II) with adapter
- Screen resolution 640 x 480 (VGA), up to 1024 x 768 (XGA)
- Power supply: 24V DC

Interfaces for I/O devices

- Serial V24 interface (COM1)
- Serial V24 interface (COM2)
- PS/2 keyboard
- Interface USB 1.1
- MPI/DP interface RS485, max. 1.5 MBaud
- Ethernet connection 10/100 Mbaud
- Memory card interface
- Floppy disk drive interface

Interfaces for operator panel front

- LVDS interface for TFT operator panel front
- CMOS interface for STN operator panel front (not on the variants that are clocked at 266 MHz and 333 MHz)
- Operator panel front I/O interface for USB data signal / display selection / LEDs / power supply

View

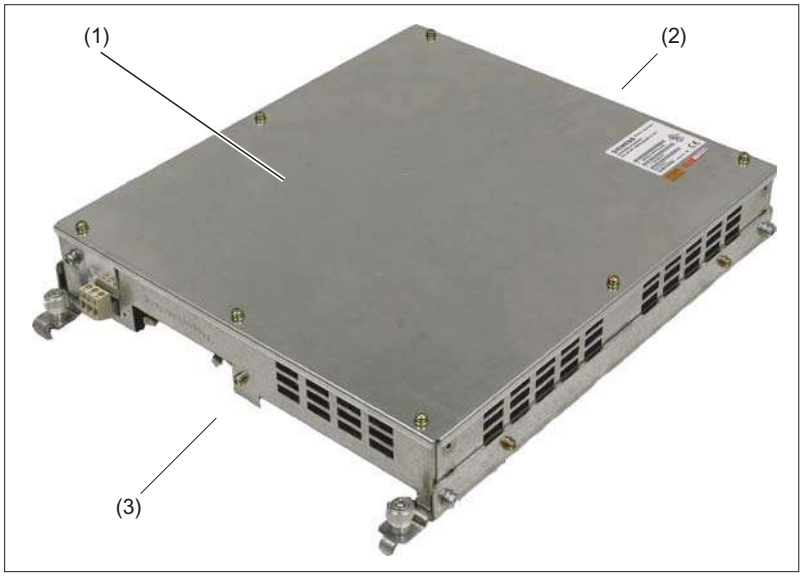

Figure 17-1 Perspective view of PCU 20

(1) top
(2) Right
(3) Left

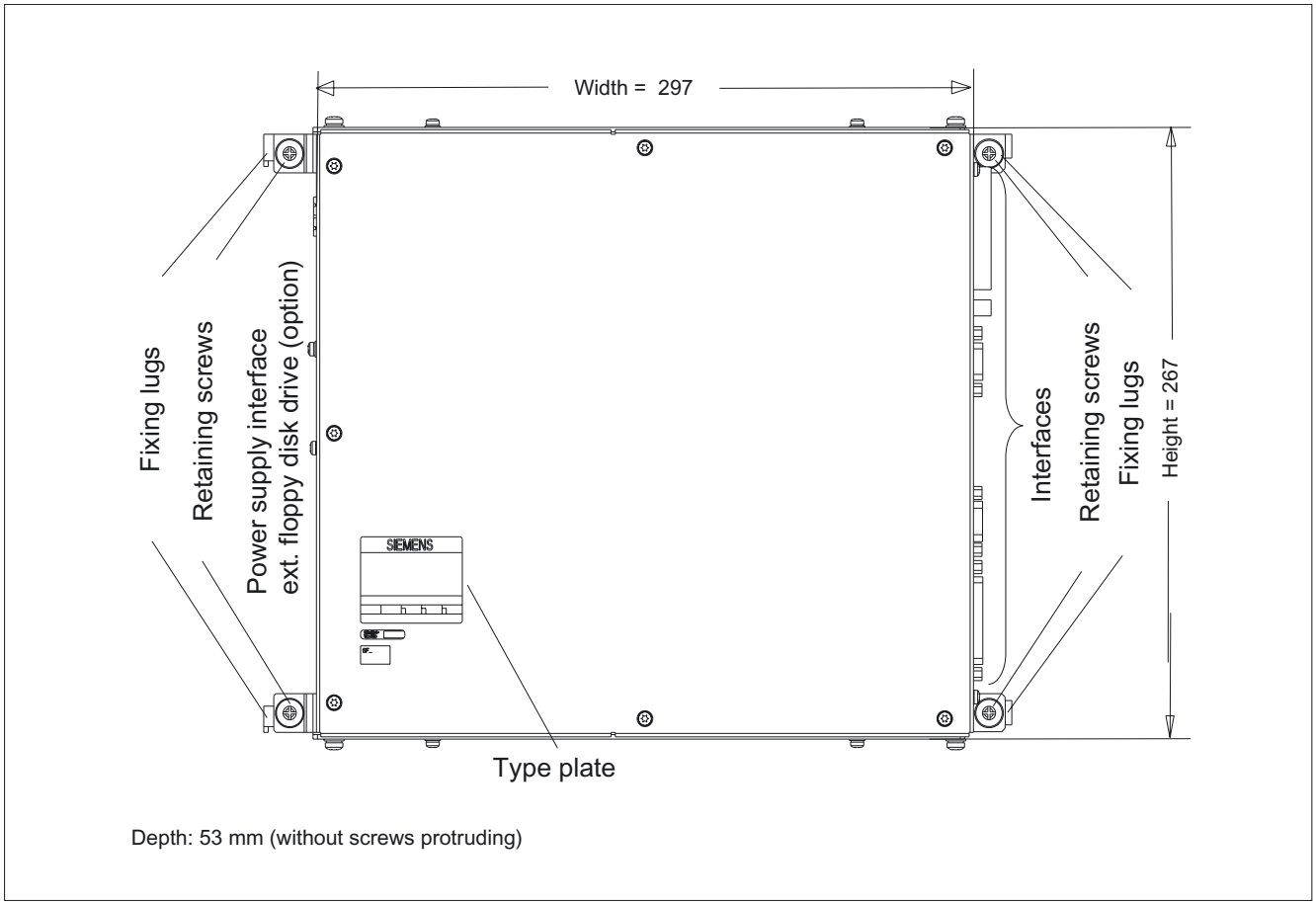

Figure 17-2 Top view of PCU 20

17.2 Interfaces

17.2.1 Right-hand casing side

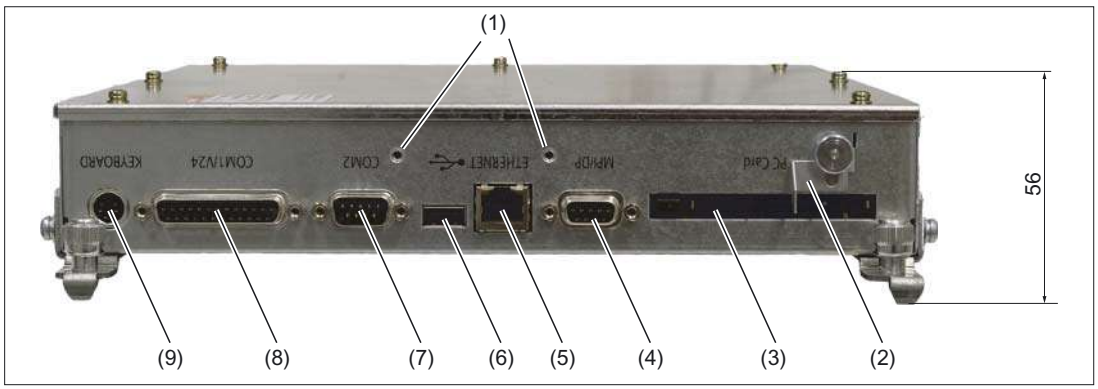

Figure 17-3 PCU 20 side view from right with interfaces

(1) Drill holes for mounting the strain relief (USB cable / Ethernet cable)

(2) PC card interlock

Table 17-1 Interfaces on the right side of the housing

	Name	Connection	Function
(3)	PC card (submodule slot)	68-pole PC card connector	Slot for • Linear Flash Memory Card (ATA Flash) or • Flash Card 100/200 type I/II or • CompactFlash Card (type I/II) with adapter
(4)	MPI/DP (RS-485)	9-pole sub-D socket	Multi-point interface / PROFIBUS DP connection Connection of an S7 programmable controller
(5)	Ethernet	8-pole RJ45 socket	Connection for local area network (LAN), software option
(6)	USB 1.1	4-pole USB socket	External connection for Universal Serial Bus
(7)	COM2/RS-232	9-pole male sub D connector	Serial interface (V24)
(8)	COM1/RS-232	25-pole sub-D socket	Serial interface (V24)
(9)	PS/2 keyboard	PS/2	Keyboard connection

17.2.2 Left-hand casing side

PCU 20 - clocked at 166 MHz / 233 MHz

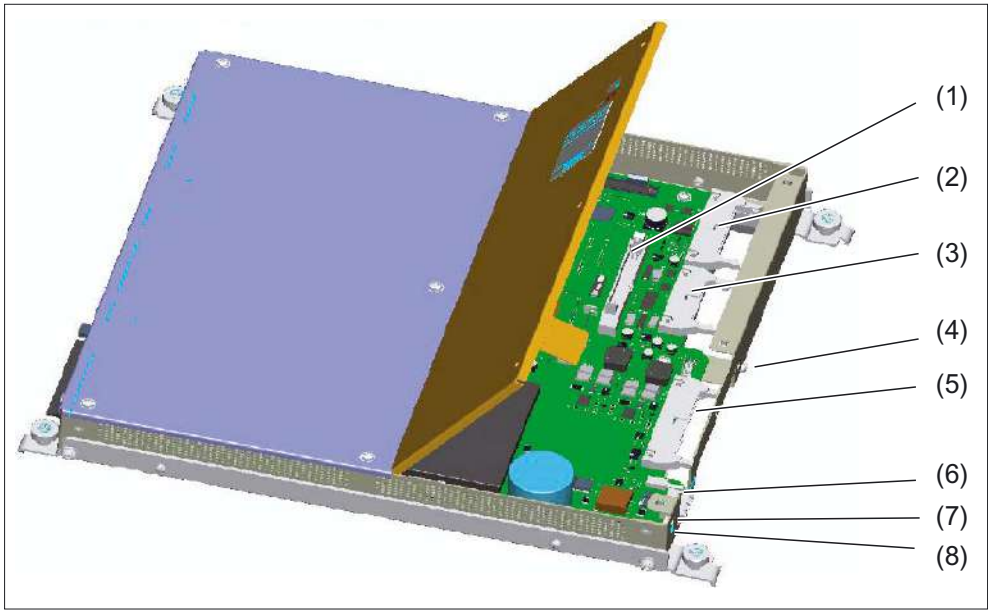

Figure 17-4 Interfaces for PCU 20 (166 MHz/233 MHz) - left side of housing

	Interfaces	Function
(1)	CMOS (X420)	Connection of an STN display (OP 010)
(2)	I/O	Operator panel front (interface for USB data signal etc.)
(3)	LVDS	Connection of the TFT display of the operator panel front
(4)		Shield connection
(5)	Floppy disk drive	Connection for external 3.5" floppy disk drive (34-pole ribbon connector socket)
(6)		Reset
(7)	24 V	Power connector
(8)		Ground terminal

Note

Pressing the Reset button will cause a hardware reset. The PCU reboots.

PCU 20 - clocked at 266 MHz / 333 MHz

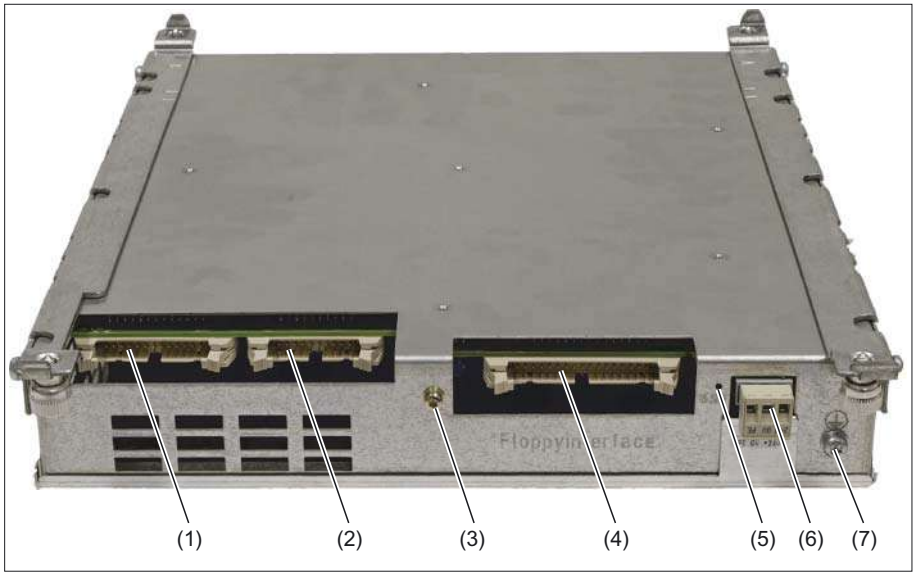

Figure 17-5 Interfaces for PCU 20 (266 MHz/333 MHz) - left side of housing

	Interfaces	Function
(1)	I/O	Operator panel front (interface for USB data signal etc.)
(2)	LVDS	Connection of the TFT display of the operator panel front
(3)		Shield connection
(4)	Floppy disk drive	Connection for external 3.5" floppy disk drive (34-pole ribbon connector socket)
(5)		Reset
(6)	24 V	Power connector
(7)		Ground terminal

17.2.3 Pin assignment of the interfaces

	Connection	Length of cable	Note
X9	Serial interface COM1	Max. 30 m	The pin assignment of these interfaces can be found in Chapter: "Connection Conditions", section: "Secondary electrical conditions".
X11	Serial interface COM2		
X6	PS/2 keyboard interface[1)]		
X40	USB interface	Max. 5 m	
X800	MPI/DP interface	max. of 200 m at 1.5 Mbaud	
X805	Ethernet RJ45 interface		
X400	Display interface (LVDS) for TFT operator panel	Max. 0.5 m	Accessible via the opening in base plate
X44	I/O interface for operator panel front	Max. 0.5 m	
X420	STN interface for operator panel front (not on the PCUs that are clocked at 266 MHz and 333 MHz)	Max. 0.5 m	The interface is located on the motherboard and is thus not visible from the outside. This interface can only be accessed by opening the casing. Details can be found in the documentation for the operator panel fronts.
[1)] Pin 2 and pin 6 of the PS/2 interface are not assigned for the PCU 20.			

CAUTION

STN interface

The STN interface is mechanically identical to the external floppy disk interface which is accessible from the outside. The devices may be damaged permanently if the STN display is inadvertently connected to the floppy disk interface!

17.3 Mounting

17.3.1 Preparation for mounting

Screw the right and left mounting brackets **(1)** onto the PCU 20 before you mount an operator panel front (see Fig.: "Perspective view of PCU 20" in Section: "Description").

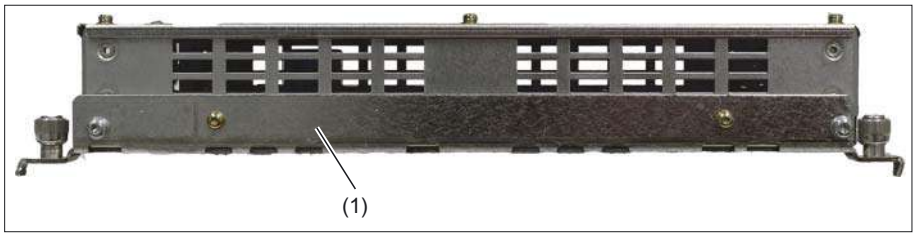

Figure 17-6 View of PCU 20 from below with mounting bracket

17.3.2 Assembly of PCU and operator panel front

Procedure

1. Secure the PCU 20 to the operator panel front (e.g. OP 012).
2. Secure this combination using the tension jacks on the mounting wall.

A detailed sample description can be found in Chapter: “OP 012”, section: "Assembling the OP 012 and PCU 50".

17.3.3 Notes on installation

Observe the following during installation:

- Avoid extreme environmental conditions as far as possible.
  Protect the PCU from dust, humidity and heat.
- Do not expose the PCU directly to the sun's rays.
- Install the equipment in such a way that it cannot present a hazard (e.g. by toppling).
- The clearance at the rear of the PCU must be at least 10 mm to ensure sufficient ventilation (see following Figure). Clearances on the sides in Section: "Heat dissipation".
- Make sure that the vent slots are not covered.

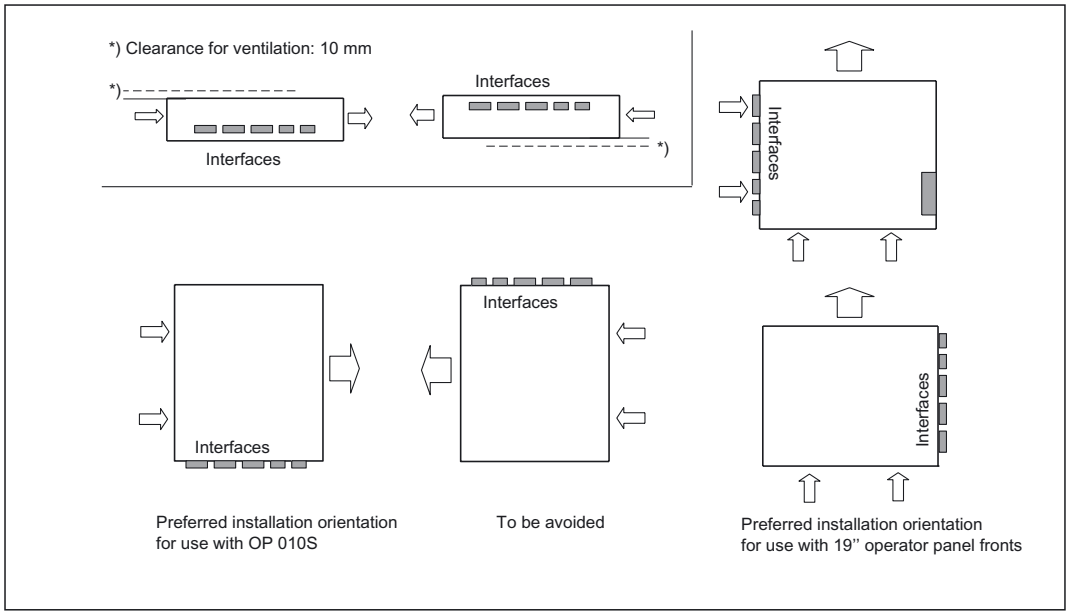

Figure 17-7 Permitted installation positions of the PCU 20 with the 19" operator panel fronts
Inclined position of ± 5° is permitted. Vertical mounting is recommended.

17.3.4 Locking the PC card

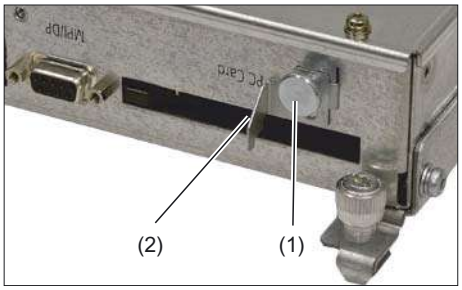

1. Unscrew the fastening screw (1) far enough out of the PCU 20 housing until the lock (2) is loose.



2. Slide the lock upward (and lock it in this position, if necessary, by tightening the fastening screw).

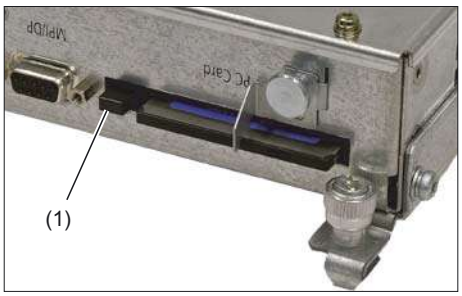

3. Slide the PC card into the slot.
   Lock the card, by sliding the lock downward and tightening the fastening screw.
   (1) Eject button

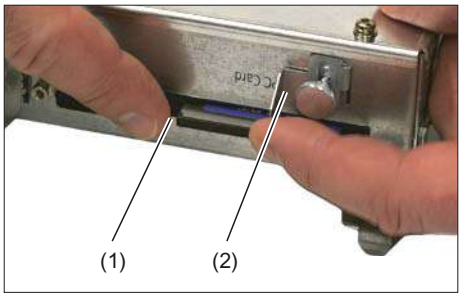

4. To remove the card from the slot, remove the screw, slide the lock (2) upward and push the eject button (1).

Note

CompactFlash card

Only CF cards in the CHS mode are supported by BIOS and the chip set of the PCU 20.

CF cards formatted in other modes (e.g. LBA mode) do not function.
Therefore, when a CF card is not recognized by the PCU 20, it is either defective or not formatted in CHS mode.
A CF card can only have its format changed to CHS mode with low-level tools from the card manufacturer.

17.3.5 Strain relief



1. Mount the strain relief as shown in the figure.

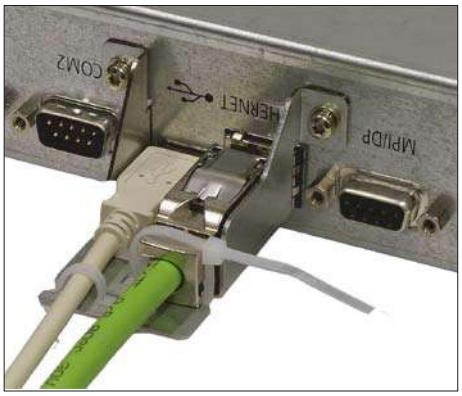

2. Plug in the corresponding cable(s) and secure it at the strain relief with a cable tie

17.4 Connectors

17.4.1 Overview

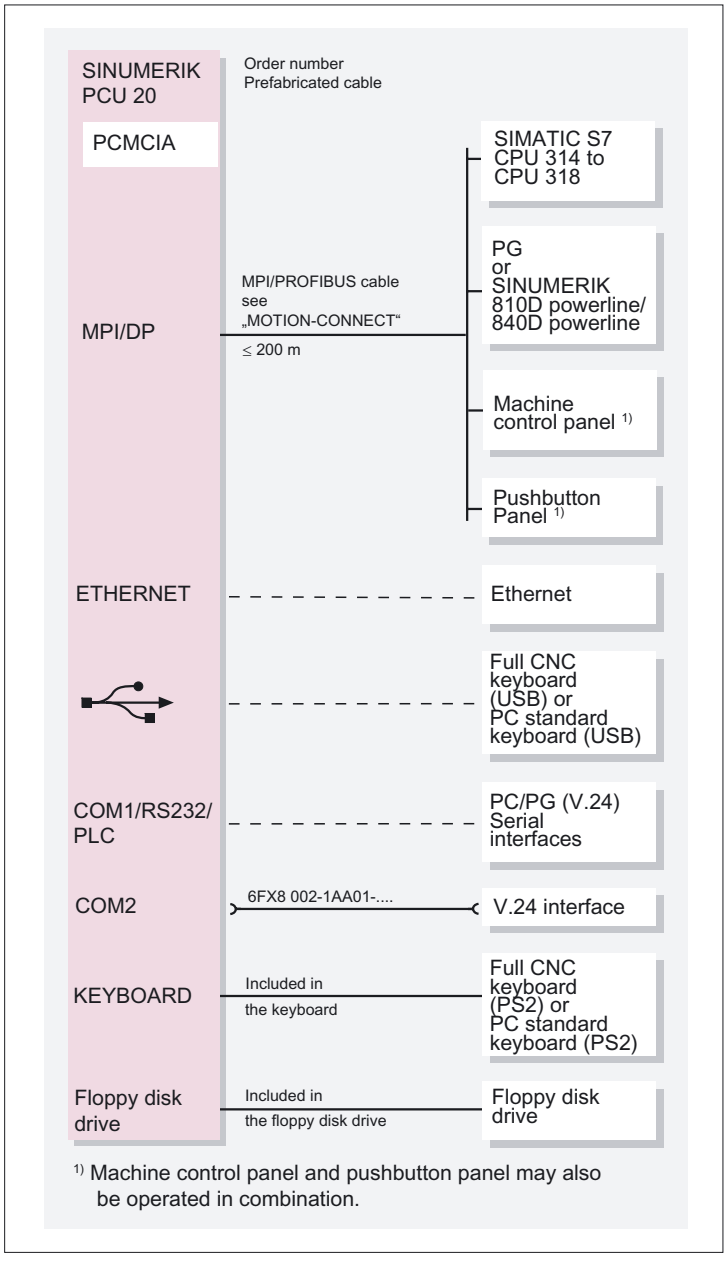

Figure 17-8 PCU 20 connection overview

17.4.2 Ground terminal

The ground connection of the PCU 20 is located on the back of the housing (see Section: "Interfaces" → "Left side of housing").

17.4.3 I/O devices

Before you connect the PCU to a power supply, you must connect an operator panel front.

Procedure

1. Insert the connecting cables for the operator panel front into the corresponding sockets on the interface side of the PCU 20 (see Section: "Interfaces").
2. After the operator panel front has been connected, the device is ready.

Information on how to adapt and set the interface and which connection cable is required, is to be found in the manual of your I/O device.

Note

When connecting I/O devices, please make sure that the components are designed for use in industry.

CAUTION
When plugging/unplugging I/O connections (keyboard, mouse, printer, memory card, etc.), make sure that the I/O devices and the PCU are disconnected from the power supply. Otherwise damage may result. This does not apply to USB connections.

17.4.4 Power Supply

The PCU 20 is supplied with 24 V direct voltage.

Switching on

- Since there is no line switch, engage the power by plugging in the main power plug.

Then the pre-installed system automatically powers up and shows the start screen.

Switching off

- Shut down the power supply by pulling the main power plug.

17.5 Technical specifications

Security			
Safety class	III; PELV acc. to EN 61800-5-1		
Degree of protection per EN 60529	IP20 (IPXXB)		
Approvals	CE, UL/CSA		
Electrical specifications			
Input voltage	DC 24 V		
Power consumption	60 W		
Mains buffering time	20 ms		
Mechanical data			
Dimensions (mm)	Width: 297	Height: 267	Depth: 56
Weight	Approx. 4 kg		
Mechanical ambient conditions	**Operation**	**Transport** (in transport packaging)	
Vibratory load	10 -58 Hz: 0.075 mm 58 -200 Hz: 1 g according to EN 60721-3-3	5 -9 Hz: 3.5 mm 9 -200 Hz: 1 g according to EN 60721-3-2	
Shock stressing	5 g, 30ms 18 shocks according to EN 60721-3-3	30 g, 6ms 18 shocks according to EN 60721-3-2	
Climatic ambient conditions			
Cooling	Open circuit ventilation		
Condensation, spraying water and icing	Not permitted		
Supply air	Without caustic gases, dusts and oils		
	Operation	**Storage/shipping** (in transport packaging)	
Applicable standards	EN 60721-3-3	EN 60721-3-1 / -3-2	
Climate class	3K5	1K3 / 2K4	
Temperature limits	0 ... 55 ºC	-25 ... 55 ºC	
Temperature change	Max. 10 K/h	Max. 18 K/h	
Limits for relative humidity	5 ... 80% at 25°C	5 ... 95% at 25°C	
Permissible change in the relative air humidity	max. 0.1 % /min		

17.6 Accessories

An external 3.5" floppy disk drive can be connected to the PCU 20. The connection for this is located on the left side of the housing (see Section: "Interfaces").

Information on the floppy disk drive can be found in Section: "3.5" Floppy Disk Drive".

PCU 50

18

18.1 Description

The high-performance SINUMERIK PCU 50 features interfaces for communication via Ethernet and PROFIBUS DP/MPI, leaving the integrated slots free for other tasks. The USB port at the back of the device provides "hot plug and play" functionality for a standard PC keyboard and mouse.

The SINUMERIK PCU 50 comes supplied with the operating system Windows NT 4.0 EmbSys or Windows XP ProEmbSys, and for backing up and restoring data, the Ghost 6 data backup software.

The HMI-Advanced user interface software can be ordered additionally.

Validity

The description applies to the following devices:

Processor	Operating system	RAM	Other features	Order No.:
Pentium II, 333 MHz	NT 4.0	128 MB		6FC5210-0DF01-0AA0
		128 MB	incl. HMI Advanced	6FC5210-0DF02-0AA0
		128 MB	incl. MCI board	6FC5220-0AA00-1AA0
Pentium II, 500 MHz	NT 4.0	128 MB		6FC5210-0DF05-0AA0
		128 MB	incl. MCI board	6FC5220-0AA01-1AA0
Celeron, 566 MHz	NT 4.0	128 MB		6FC5210-0DF20-0AA0
		128 MB	incl. MCI board	6FC5220-0AA20-0AA0
	XP	256 MB		6FC5210-0DF21-2AA0
Celeron, 1.2 GMHz	NT 4.0	256 MB		6FC5210-0DF22-0AA0
		256 MB	incl. MCI board	6FC5220-0AA22-0AA0
	XP	256 MB		6FC5210-0DF22-2AA0

Features

- Rugged design (continuous operation, high noise immunity)
- Compact construction for space-saving installation
- Easy-to-service design
- Easy installation with four screws on the rear of the operator panel front
- Mounting position and location to a large degree variable

- Processor variants (see table)
- User memory (RAM), max. 512 MB
- 10.4 GB hard drive
- Operating system Windows NT (not touch panels) or Windows XP
- Screen resolution
  - Max. 1024 x 768 pixels (XGA) with Pentium processors
  - Max. 1600 x 1200 pixels with Celeron processors
- Power supply: 24 VDC
- Interfaces for I/O devices:
  - Parallel interface LPT1
  - Serial interfaces: 1 x RS-232-C (25-pole), 1 x RS-232-C (9-pole)
  - PS/2 keyboard interface
  - PS/2 mouse interface
  - MPI/DP (max. 12 Mbaud)
  - VGA interface for external monitor
  - Ethernet connection 10/100 Mbaud
  - 2 slots: 1x PCI and 1x shared PCI/ISA
  - PC card slot
  - USB interface (for Windows NT: for standard PC keyboard and mouse)
  - for PCU > 500 MHz: Additional USB interface
- Interfaces to operator panel front:
  - LVDS interface
  - CMOS interface
  - I/O interface

Note

Where the Windows NT operating system is used, the USB interface only supports keyboards and mouse units.

Combination with touch panels TP 012 and TP 015A is only possible under Windows XP.

If other USB devices are used, the noise immunity of the entire system may be reduced. The end user takes responsibility for the use of such devices.

View

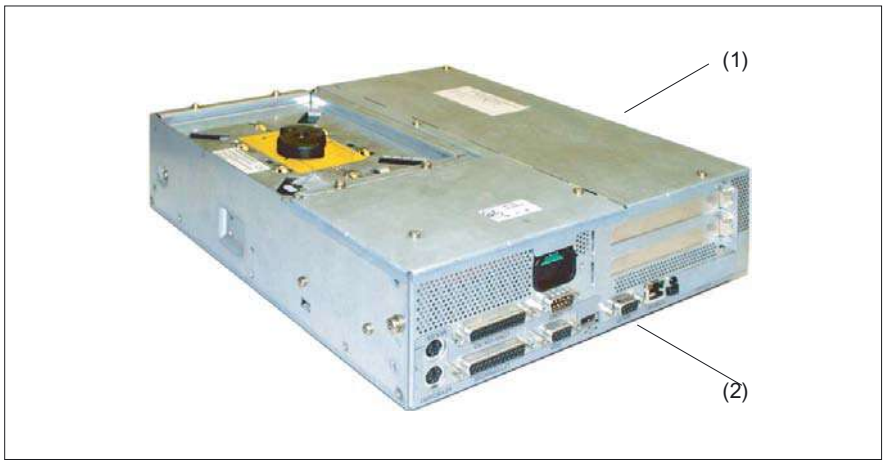

Figure 18-1 PCU 50 ≤ 500 MHz: Perspective view with built-in hard disk drive based on operating with the OP 012

(1) top
(2) Right

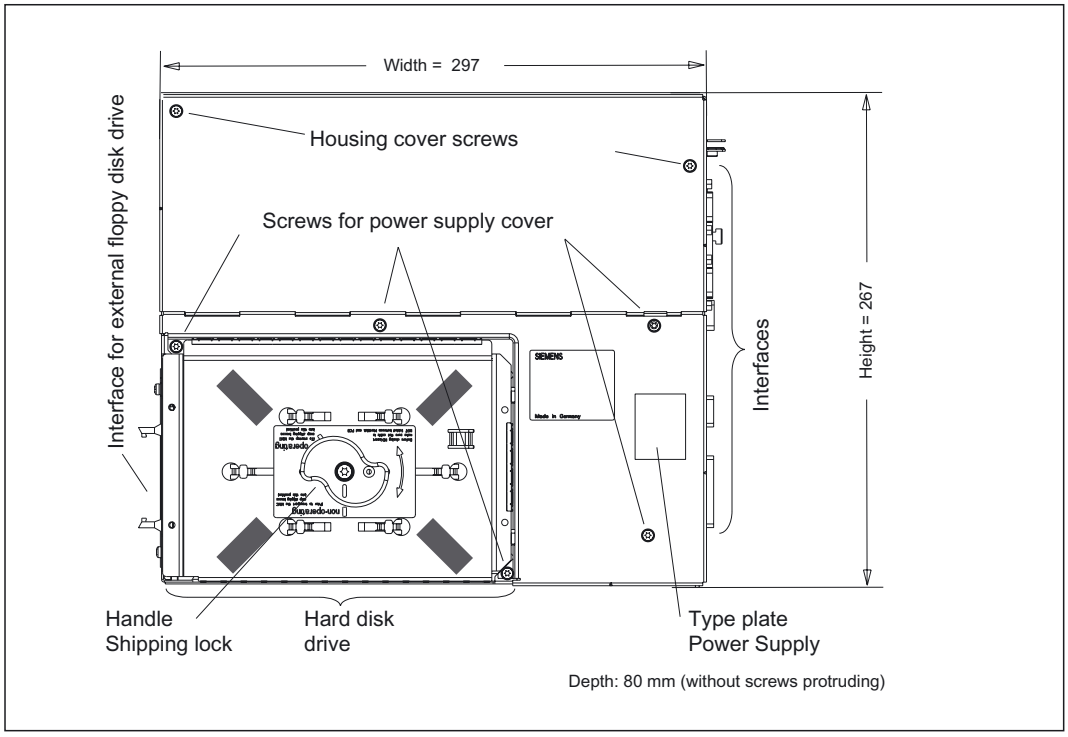

Figure 18-2 Top view of PCU 50

18.2 Interfaces

18.2.1 Right-hand casing side

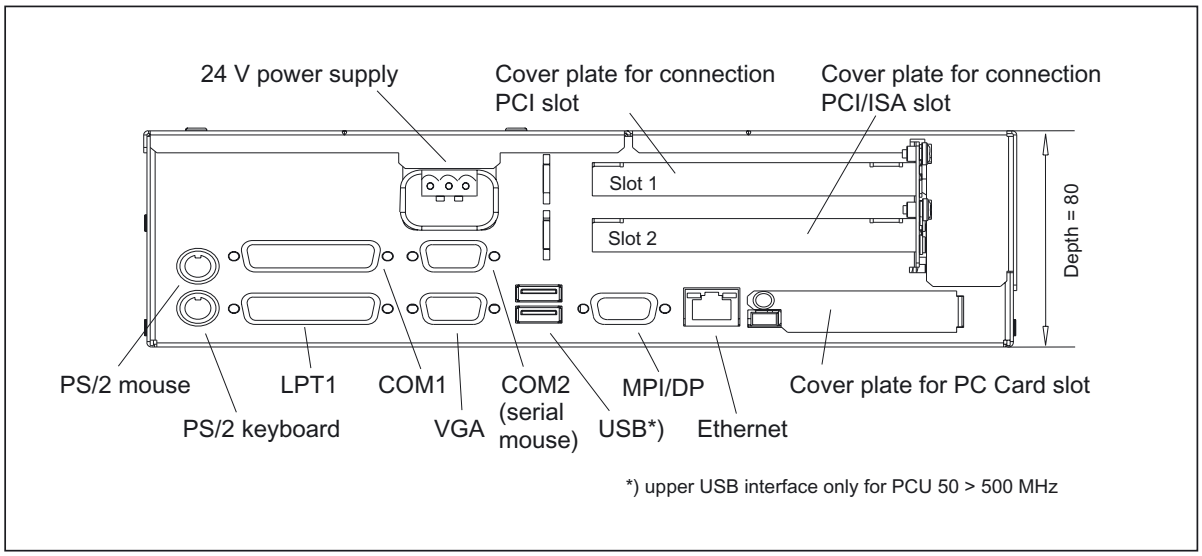

Figure 18-3 PCU 50 side view from right with interfaces

Interface/connection		Function	
LPT1/Printer		Parallel interface (e.g. printer), 25-pole sub D socket	
COM1/RS-232		Serial interface 1 (V24), 25-pole sub D socket	
COM2		Serial interface 2 (RS-232), 9-pole male sub D connector	
Keyboard		PS/2 keyboard connection	
Mouse		PS/2 mouse connector	
USB	PCU 50 ≤ 500 MHz	One external USB connection	Windows NT: one connection can be used for a standard PC or mouse
	PCU 50 ≥500 MHz	Two external USB connections	
MPI/DP (RS-485)		Multi-Point Interface/Profibus DP connection Connection of an S7 programmable controller, 9-pole sub D socket	
VGA		VGA interface for external monitor, 15-pole sub D socket	
Ethernet		Connection for local area network (LAN)	
PC card slot		Slot for ATA flash card/memory card or Flash Card 100/200 Type I/II	
PCI slot		Slot for expansion boards [1)]	
PCU/ISA slot		Slot for expansion boards [1)]	
Power supply connection		24 V DC	

[1)] If expansion modules are plugged in, the cover plates (figure above) are replaced by the front plates of the respective module. Refer to the module documentation for more details.

18.2.2 Left-hand casing side

The connection for an external floppy disk drive **(3)** is on the left side of the housing.

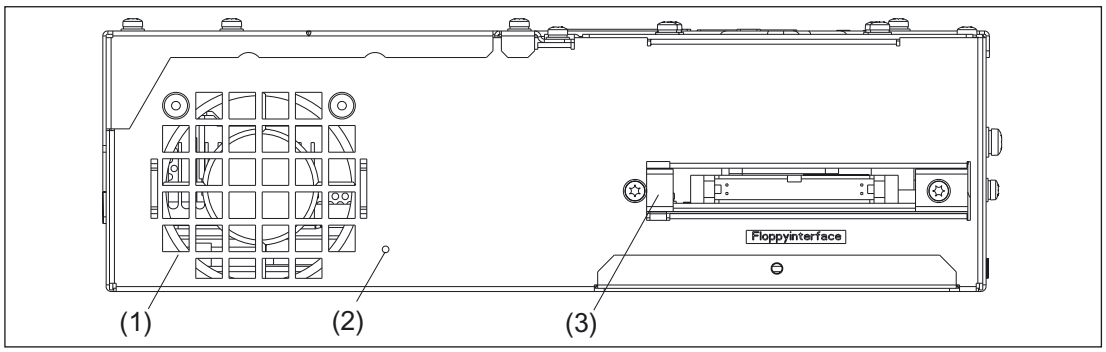

Figure 18-4 Side view of PCU 50 from left with the port for an external floppy disk drive

(1) Device fan
(2) Reset button
(3) Connection for external floppy disk drive (34-pole plug connector)

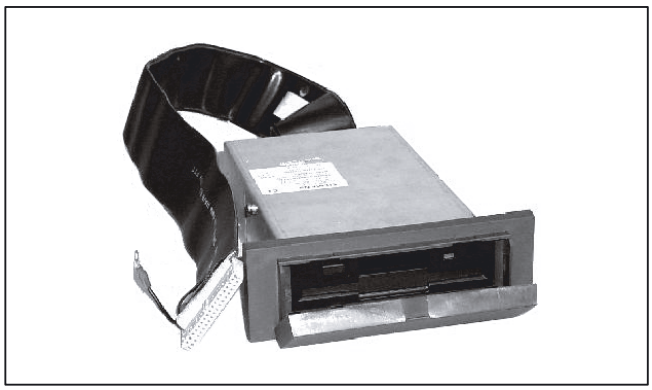

Figure 18-5 External floppy disk drive

Note

Pressing the Reset button **(2)**will cause a hardware reset. The PCU reboots.

18.2.3 Casing rear side

The two interfaces for the operator panel front to be mounted are located behind a rectangular cut-out in the rear side of the casing.

- the IO interface for connecting the IO USB cable and
- LVDS interface for connecting a TFT display

18.2.4 Pin assignment of the interfaces

For the pin assignments of the individual interfaces, refer to Chapter: "Connection Conditions", section: "Secondary electrical conditions".

18.3 Mounting

18.3.1 Preparation for mounting

Appropriate mounting brackets are provided for each of the following PCU 50 mounting options (see Section: "Accessories"):

1. Standard mounting for assembly of PCU + operator panel front
2. Flat mounting for distributed installation of PCU + videolink transmitter
3. Upright mounting for distributed installation of PCU + videolink transmitter
4. Central mounting for distributed installation of PCU + videolink transmitter

Before assembling with an operator panel front or a videolink transmitter, secure the appropriate mounting brackets to the PCU.

The illustration shows the PCU and mounting brackets (standard) correctly aligned before they are screwed together. Torque M3: 0.8 Nm; M4: 1.8 Nm.

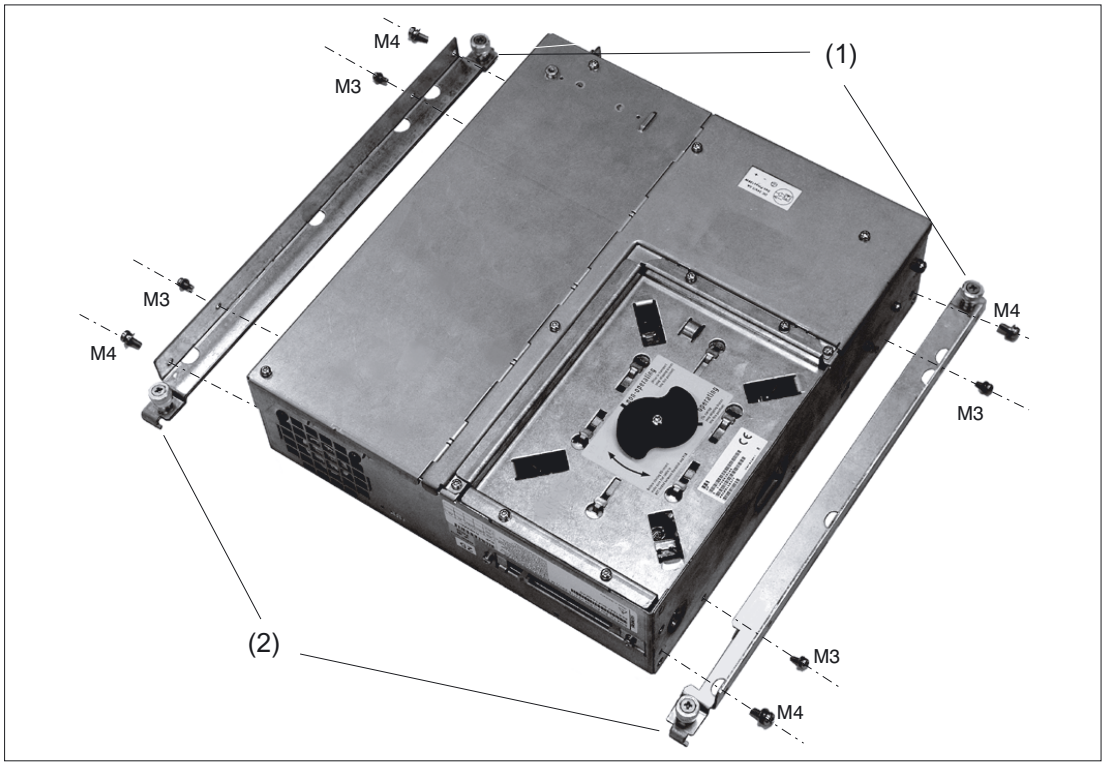

Figure 18-6 PCU 50 with standard mounting brackets

(1) Lugs without hinged catch
(2) Lugs with hinged catch

NOTICE
Only use M3x8 and M4x8 screws (provided) to mount the mounting brackets. The mainboard will be damaged if you - screw in the M3x8 and M4x8 screws without mounting brackets, - if you use other 8 mm screws (without a flat washer or tension ring) or - if you use longer screws.

18.3.2 Assembly of PCU and operator panel front

Install the PCU and operator panel front as described in section: “OP 012,” section: "Mounting" → "Assembling OP 012 and PCU".

18.3.3 Assembling the PCU and videolink transmitter

Mount the PCU and videolink transmitter as per the description in

Chapter: "Distributed configuration with videolink"	Section: "Mounting"	→ "Flat mounting
		→ "Upright mounting
		→ "Central mounting

18.3.4 Notes on installation

Observe the following during installation:

- Avoid extreme environmental conditions as far as possible.

  Protect the PCU from severe vibrations, jolts, dust, humidity and heat.
- An external fire protection housing is required.
- Do not expose the PCU directly to the sun's rays.
- Install the device in such a way that no danger (e.g. by falling down) may result.
- Ventilation clearances:
  - On the side of the fan: 100 mm
  - At rear side: 10 mm (see Fig.)
- Make sure that the vent slots are not covered.

Permitted installation positions of the PCU 50

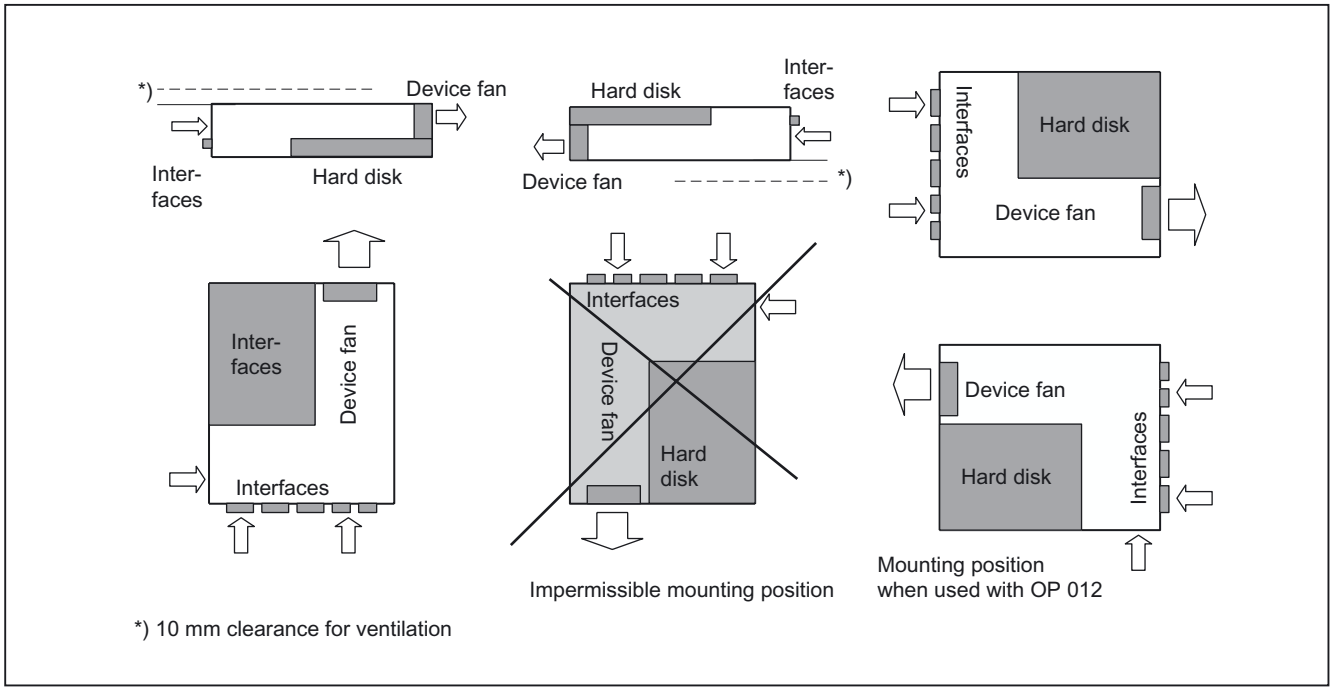

Figure 18-7 Inclined position: Deviations of ± 5° in comparison to the installation positions shown in the figure are permitted.

18.4 Connectors

18.4.1 Ground terminal

The ground terminal **(1)** of the PCU 50 is on the underside of the casing.

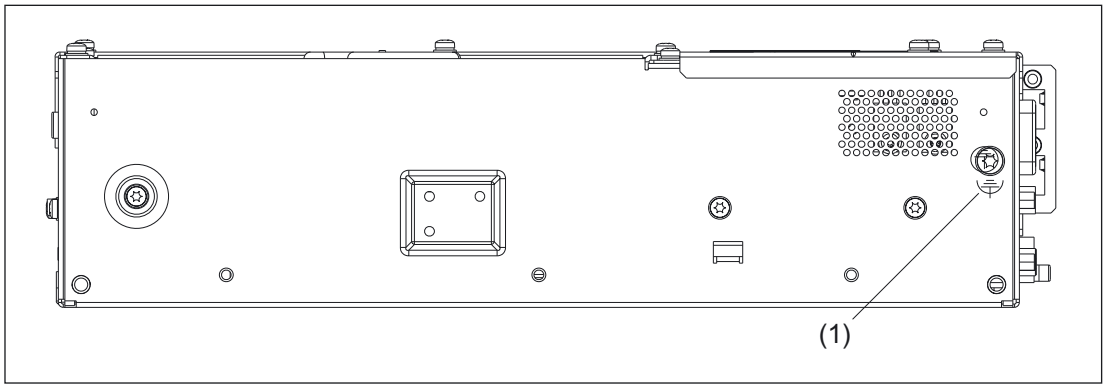

Figure 18-8 Underside of PCU 50

18.4.2 I/O devices

Before you connect the PCU to a power supply, you must connect the hard disk and the I/O devices (operator panel front, keyboard, and mouse).

Procedure

1. Insert the connecting cables for the I/O devices into the corresponding sockets on the interface side of the PCU 50 (see Section: "Interfaces").
2. After the operator panel front has been connected, the device is ready.

Information about how to adjust and set your interface and the required connecting lead can be found in the Operator Guide that goes with the peripheral.

Note

When connecting I/O devices, please make sure that the components are designed for use in industry.

CAUTION
When plugging in / unplugging I/O connections (keyboard, mouse, printer, etc.), make sure that the I/O devices and the PCU are disconnected from the power supply. Otherwise damage may result. This does not apply to USB connections.

18.4.3 Power Supply

The PCU 50 is supplied with 24 V direct voltage.

⚠ CAUTION
The device should only be connected to a 24V DC power supply which satisfies the requirements of safe extra low voltage (SELV). The cable cross-section must be large enough to ensure that no damage can be caused by the cables if there is a short-circuit at the PCU.

Switching on and switching off

A main power switch is not provided which means that the device must be switched on and off at the external power supply.

18.5 Commissioning

18.5.1 Power-up

When the power supply is switched on, the preinstalled system boots automatically and finally shows the start screen (see IM4: Start-up Guide, Section "Booting the system").

When the system boots, the system parameters stored in the BIOS (Basic Input Output System, see below) become operative.

Boot manager

If you let the system boot automatically, a query will appear on the screen asking whether you wish to go

1. to the User main menu or
2. Service menu

branched. As a user you will generally select number 1. With the input key (see diagram in Section: "Changing the Bios settings") confirm your selection and allow the system to power up to the desired menu.

18.5.2 Changing the

Default values

The following table contains the adjustable BIOS parameters together with their default values:

Description	Standard setting	
Menu / Parameter	PCU 50 / 70 ≤ 500 MHz	PCU 50 / 70 > 500 MHz
Main		
System Time	xx:xx:xx	
System Date	xx/xx/xxxx	
Floppy disk A:	1.44 MB, 3 ½" (connected externally => disable additional HD test)	
Primary master	Depending on hard disk	
Primary slave	None	
Secondary master	None	
Secondary slave	None	
Memory cache	Write back	

Description	Standard setting	
Boot options		
Quick boot mode	Enabled	
SETUP prompt	Enabled	
POST errors	Enabled	
Floppy check	Disabled	
Summary screen	Enabled	
Keyboard features		
Num Lock	Off	
Key click	Disabled	
Keyboard auto-repeat rate	30/s	
Keyboard auto-repeat delay	1/2 s	
Hardware options		
PCI MPI/DP	Enabled	
On-board Ethernet	Enabled	
LAN remote boot	Enabled	
Cardbus/PCMCIA slot	Enabled	
Fan control	----	Enabled
SafeCard functions	Enabled	
Legacy USB support	Enabled	
CRT/LCD selection	Simultaneous	
LCD screensize	Expand	
DSTN contrast	154	
PS2 mouse	Auto Detect	
Advanced		
COM/LPT	Configuration	
Internal COM1	Enabled	
Base I/O address	3F8	
Interrupt	IRQ4	
Internal COM2	Enabled	
Base I/O address	2F8	
Interrupt	IRQ3	
Internal LPT1	Enabled	
Mode	EPP	
Base I/O address	378	----
Interrupt	IRQ7	
PCI configuration: PCI Device Slot 1 / 2		
Option ROM scan	Enabled	
Enable master	Enabled	
Latency timer	0040 h	
PCI Device Slot 3 / 4 *)		
Option ROM scan	Disabled	

Description	Standard setting	
Enable master	Disabled	
Latency timer	0040 h	
PCI/PnP ISA IRQ exclusion		
IRQ3	Available	
IRQ4	Available	
IRQ5	Available	
IRQ7	Available	
IRQ9	Available	
IRQ10	Available	
IRQ11	Reserved	
PCI IRQ line 1	5	
PCI IRQ line 2	Auto-select	
PCI IRQ Line 3 / 4 *)	Auto-select	
Installed O/S	Other	
Reset configuration data	No	
Floppy disk controller	Enabled	
Local bus IDE adapter	Primary & Secondary	Both
Large disk access mode	DOS	
Hard disk pre-delay	Disabled	----
Memory gap at 15 MB	Disabled	
Video Adapter Settings		
Frame buffer size	----	8 MB
AGP Rate	----	4 x
Default Primary Video Adaptor	----	AGP
Security		
Supervisor password is	Disabled	
User password is	Disabled	
Set supervisor password	[Enter]	
Set user password	[Enter]	
Password on boot	Disabled	
Fixed disk boot sector	Normal	
Floppy disk access	Supervisor	
Power		
APM	Enabled	
Power savings	Disabled	
Standby timeout	Off	
SuspendTimeout	Off	----
Hard disk timeout	Disabled	

Description	Standard setting	
Boot sequence		
	Hard drive	
	Removable devices	
	CD-ROM Drive	
	----	IBA 4.0 22 Slot 0048

*) BIOS lines "PCI Device Slot 3 / Slot 4" and "PCI IRQ Line 3 / Line 4": relevant only for PCU 70

18.5.3 Changing the BIOS settings

After installing or mounting additional components (e.g. ext. floppy disk drive), these must be registered with the system in the BIOS setup.

You can activate this via the operator panel front (see figure).

Procedure

1. Ramp up the device.
2. After you are prompted to activate BIOS Setup, press key F2. The BIOS Setup menu will appear.
3. In the menu, use the cursor keys for navigating to the desired selection field, e.g. "Disk A:"
4. Change the setting using the + key (press <SHIFT> and <X> at the same time) or the <–> key (on the numerical keypad).
5. Press the right or left cursor keys to access other setup menus if required.
6. Press <Escape> (<Alarm Cancel> key) to go to the “Exit” menu (or press the right cursor key again).
7. Press the <Enter> key to exit the setup menu.
8. Press the Input key to confirm your decision to exit BIOS Setup with "Yes".

The system will then boot as described above.

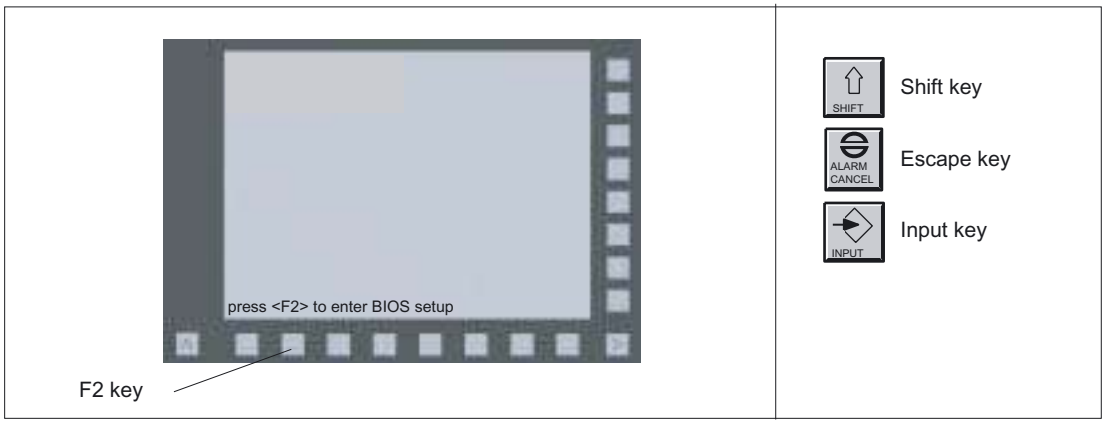

Figure 18-9 PCU 50: Using the BIOS Setup via an operator panel front

Note

With the exception of the boot sequence and the LPT mode (EPP, EPC), an OEM contract must be concluded in order to make changes to the BIOS settings.

18.5.4 Calibration of the touch screen

Whenever a new touch panel (TP 012 or TP 015A, combined with PCU 50 with 500 MHz processor and Windows XP) is connected, a calibration must be performed.

For this purpose, the basic software WinXP up to and incl. V07.03.03 contains Version 5.63 SR3 of the 3M Touch-Software and in the basic software as of WinXP V07.03.05 contains Version 5.64 SR3.

Procedure

A functioning touch panel system with PCU 50 (see above) is required.

1. Boot up the system in service mode.
2. Start the SINUMERIK desktop (password-protected).
3. Call up the calibration menu with “Start” → “Programs” → “Touchware” → “Touchware” (see Fig.).

Note

On the TP 015A the default calibration is centrosymmetric to the center point. This means that you must press the top right of the screen to activate the "Start" button (bottom left).

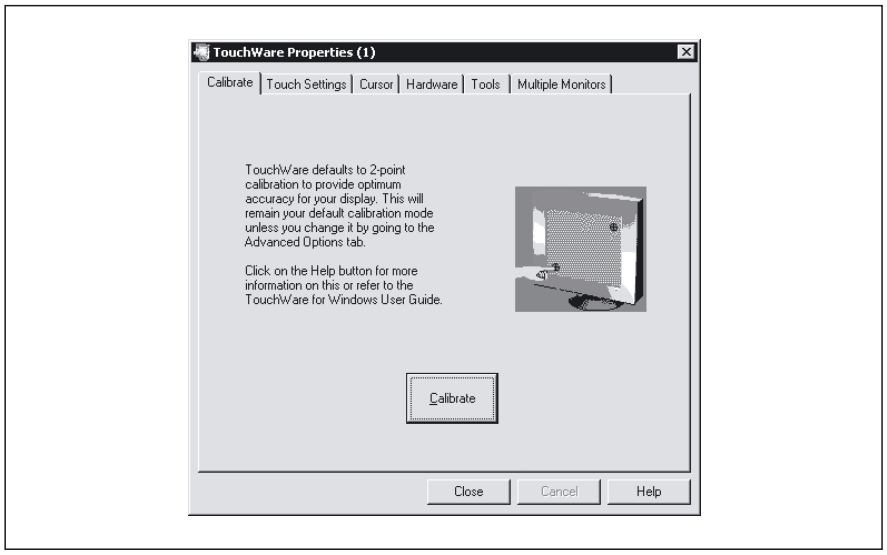

Figure 18-10 Menu for touch screen calibration (Touchware version 5.64 SR3)

Note

Depending on the software version and setting, the screen can include 2, 4 or 5 calibration points.

You can toggle between 2 and 5 points (Touchware version 5.63 SR3) or between 2 and 4 points (Touchware version 5.64 SR3) from the menu "Tools" → "Options" → "Advanced" → "Style".

4. Press the "Calibrate" button.

The following display appears:



Figure 18-11 Calibration screen

5.Using the tip of one finger, touch the calibration point indicated by the hand symbol as precisely as possible for as long as the "Hold" prompt is displayed.

The "Hold" instruction disappears after a few seconds and the hand moves to the next calibration point.

6.Repeat the step under item 5 until all available points have been calibrated.

When the parameters have been saved, the following menu appears:

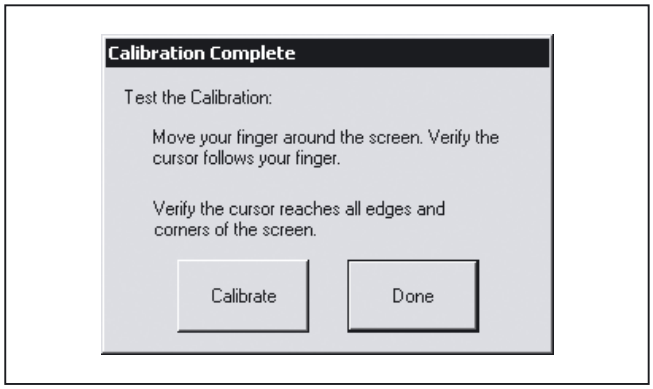

Figure 18-12 Test menu

7.To test the calibration, move your finger around the screen and watch the cursor.

You can calibrate the screen again if necessary by pressing "Calibrate".

8.Once calibration has been successful, leave the menu by pressing "Done" → "Close".

If you take too long, the action will be aborted with a "timeout" and you will have to start again.

18.5.5 Use of PC cards

The PCU 50 is equipped with a PC card interface. This can be used to operate Cardbus cards (32 bit) and PCMCIA cards (16 bit). Communication boards for MODEM, FAX MODEM, ISDN, Token Ring, ETHERNET, memory extensions and SCSI interfaces can be inserted in checkcard format.

Before using these cards:

Software

The "Cardware" software is required for Windows NT. See catalog for information on ordering.

BIOS settings

see IAD, Start-up Guide, SINUMERIK 840D

CAUTION
Before you insert the PC card, the ejector for Cardbus/PC cards must be fully depressed. Otherwise, if you are inserting slim PC cards (e.g. Flash Memory Cards), the card may get stuck in the slot. The PC card then cannot be inserted properly. Before you insert or withdraw Cardbus/PC card, you must discharge your body's static loading by briefly touching a grounded object. Otherwise faults can occur. When you plug it in, the PC card nameplate must point towards the back of the PCU. Otherwise the PC card and/or the PCU could be damaged. Only take out the card when data is no longer being transferred (risk of loss of data and system crash).

Inserting the card

1. Open the interface cover by loosening the plastic rivets with a flat-bladed screwdriver (there are two parts).
2. Remove the cover plate from the guide.
3. Insert the required PCMCIA card or Cardbus card.

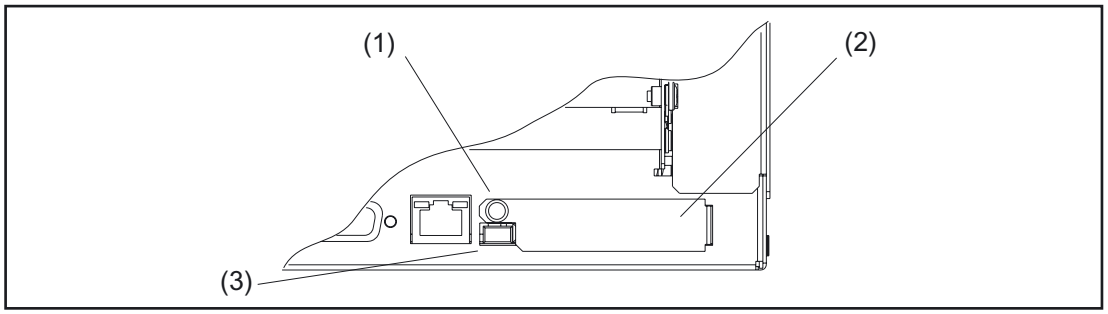

Figure 18-13 PC card interface

(1) Cover plate fastening rivets
(2) Cover plate for PC card slot
(3) PC card eject button

18.6 Technical specifications

Security				
Safety class		III; PELV acc. to EN 50178		
Degree of protection per EN 60529		IP20		
Approvals		CE		
Electrical specifications				
Input voltage		DC 24 V		
Max. power consumption		PCI / ISA slot		Total
	5 V	2 A		3 A
	12 V	0.3 A		0.6 A
	-12 V	0.1 A		0.15 A
Power consumption		Typ. 40 W	Max. 130 W	
Power loss ride-through time		20 ms		
Mechanical data				
Dimensions (mm)		Width: 297	Height: 267	Depth: 77
Weight		Approx. 6 kg		
Mechanical ambient conditions (with OP 012)		**Operation**	**Transport** (in transport packaging)	
Vibratory load		10 -58 Hz: 0.075 mm 58 -200 Hz: 9.8 m/s² 3M4 per EN 60721-3-3	5 -9 Hz: 3.5 mm 9 -200 Hz: 9.8 m/s² 2M2 per EN 60721-3-2	
Shock stressing		50 m/s², 30 ms, 18 shocks 3M2 per EN 60721-3-3	300 m/s², 6 ms, 18 shocks 2M2 to EN 60721-3-2	
Noise		< 55 dB(A) to DIN 45635		
Climatic ambient conditions				
Cooling		Open circuit ventilation		
Condensation, spraying water and icing		Not permitted		
Supply air		Without caustic gases, dusts and oils		
		Operation	**Storage/shipping** (in transport packaging)	
Applicable standards		EN 60721-3-3	EN 60721-3-1 / -3-2	
Climate class		3K5	1K3 / 2K4	
Temperature limits		15 W [1] 5 ... 55 ºC 20 W [1] 5 ... 50 ºC 30 W [1] 5 ... 45 ºC	-20 ... 60ºC	
Temperature change		Max. 10 K/h	Max. 18 K/h	
Limits for relative humidity		10 ... 80%	5 ... 95%	
Permissible change in the relative air humidity		max. 0.1 % /min		

[1] max. output expansions (PCI/ISA slots, PC card, USB interface)

18.7 Replacement parts

18.7.1 Overview

Table 18-1 Spare parts for the PCU 50

Replacement part	PCU variant	Order no.
Hard disk with mounting plate and damper	PCU 50 ≤ 500 MHz	6FC5247–0AF08–0AA0
	PCU 50 > 500 MHz	6FC5247–0AF08–0AA1 *)
Equipment fan		A5E00019079
3.0 V backup battery		A5E00331143
24 V DC power supply	PCU 50 ≤ 500 MHz	A5E00166828
	PCU 50 > 500 MHz	A5E00100846

*) Can also be installed in PCU 50 ≤ 500 MHz

18.7.2 Replacement

18.7.2.1 Hard disk

The installed hard disk drive is connected via a ribbon cable to the socket in the PCU mother board.

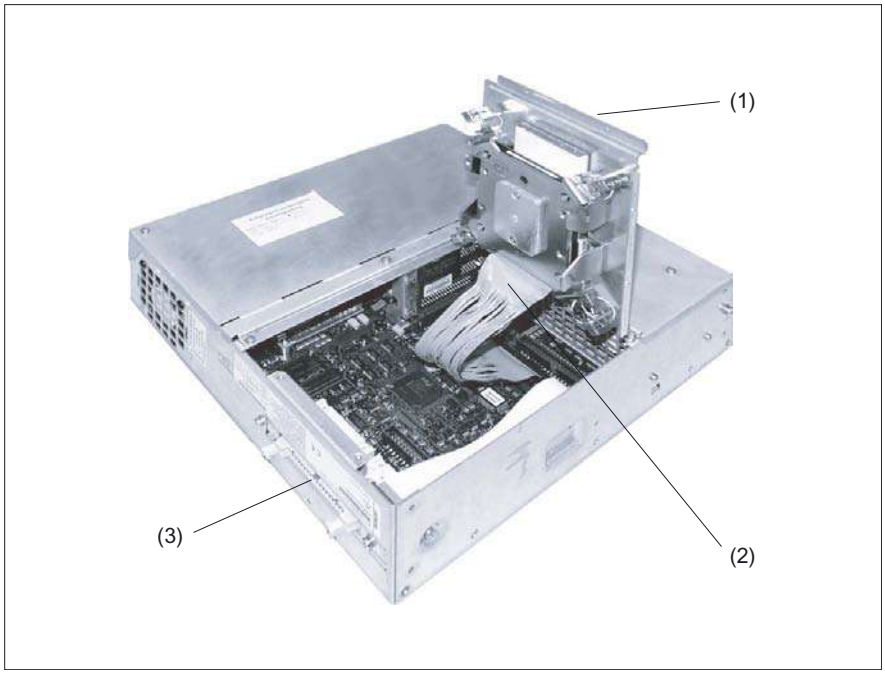

Figure 18-14 PCU 50 ≤ 500 MHz: Perspective view with the hard disk drive swung out

(1) Hard disk holder
(2) Ribbon cable for hard disk connection
(3) Plug connector for connecting an external floppy disk drive

Procedure

1. Lock the shipping lock of the hard disk by turning the handle to the "non-operating" position (see Fig. on bottom left).
2. Loosen the four fastening screws of the hard disk mount.
3. Fold up the hard disk mount (see Figure above).
4. Remove the ribbon cable from the socket. To do this, push back the two latching lugs on the connector.
5. Repeat the above steps in reverse order to install the new drive. The new drive must be of the same type as the removed one.
6. Release the shipping lock or else the system will not boot ("operating" position; see Fig. at bottom right).

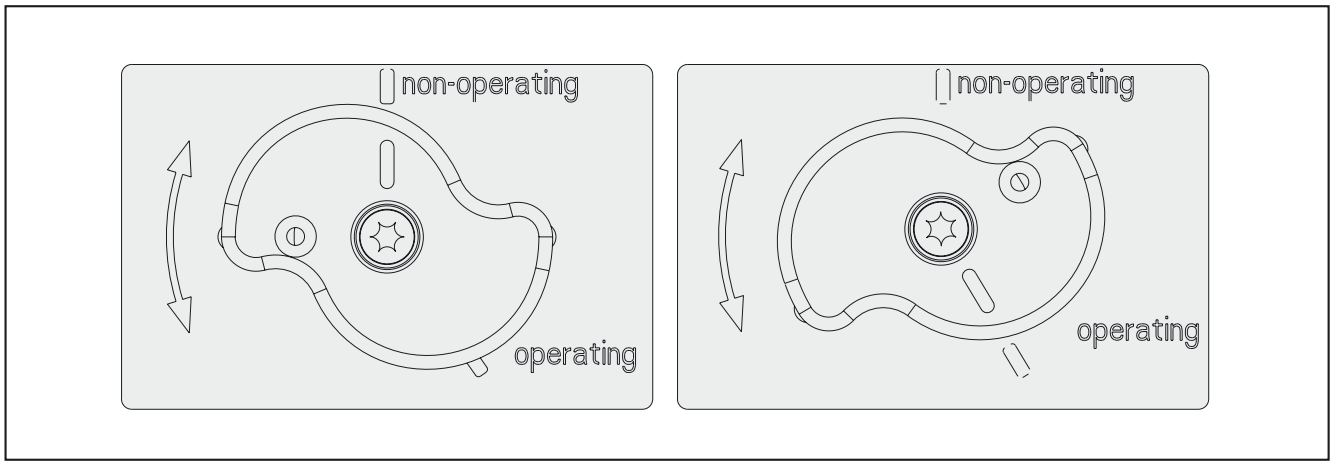

Figure 18-15 Transport lock for hard disk drive: left locked; right unlocked

18.7.2.2 Power Supply

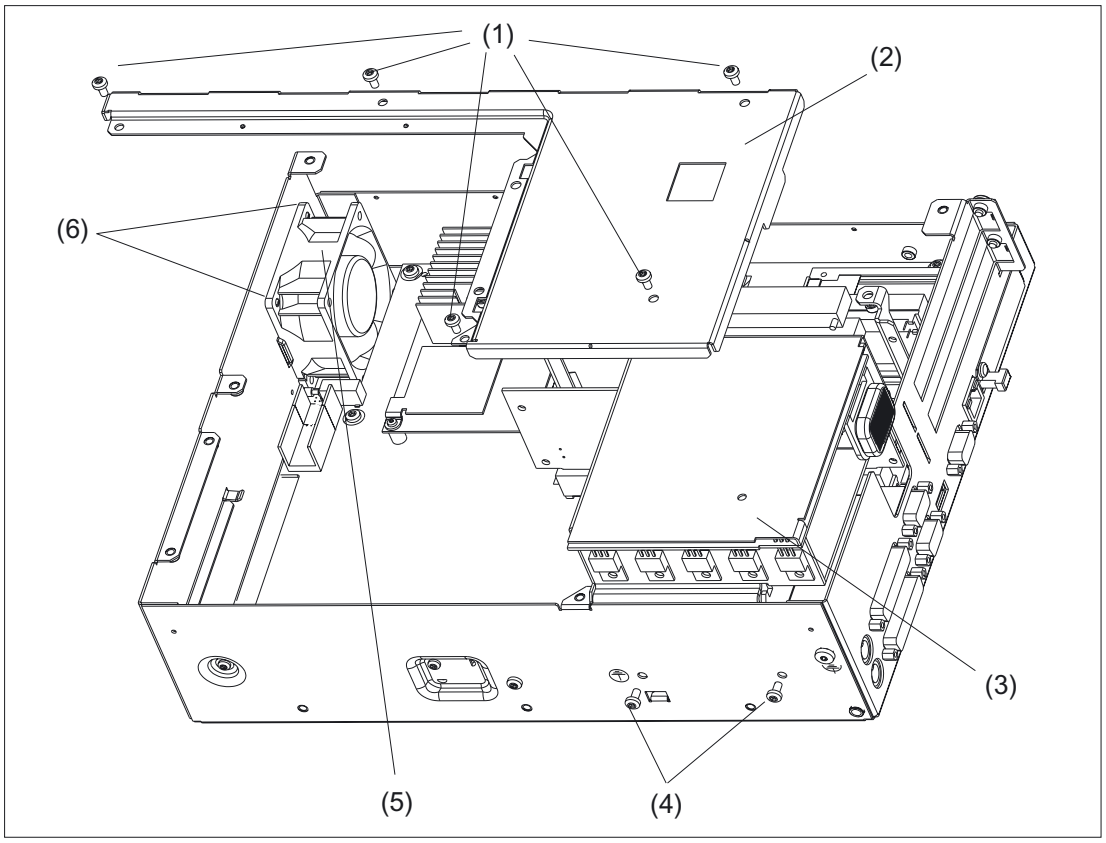

Figure 18-16 Removal/installation of the power supply (Art. No. A5E00166828)

(1) Retaining screws for the power supply cover
(2) Power supply cover
(3) Power Supply
(4) Fastening screws of the power
(5) Device fan
(6) Split rivets for device fan

Procedure

1. Lock the transport lock for the hard disk (see section "hard disk", figure below).
2. Loosen the fastening screws of the hard disk. The hard disk cables, however, may remain connected.
3. Open the casing by loosening the casing cover screws (see Section: "Description"), figure: "Top view of PCU 50").
4. Remove the screws securing the power supply cover to the casing and lift off the cover (see Fig. above).

5. Only for power supply No. A5E00100846: Unplug the connecting cable connector from the main board (see Fig. below).
6. Release the two fastening screws on the casing.
7. Pull the power supply up and out of the casing.
8. Repeat the above steps in reverse order to install the new power supply.

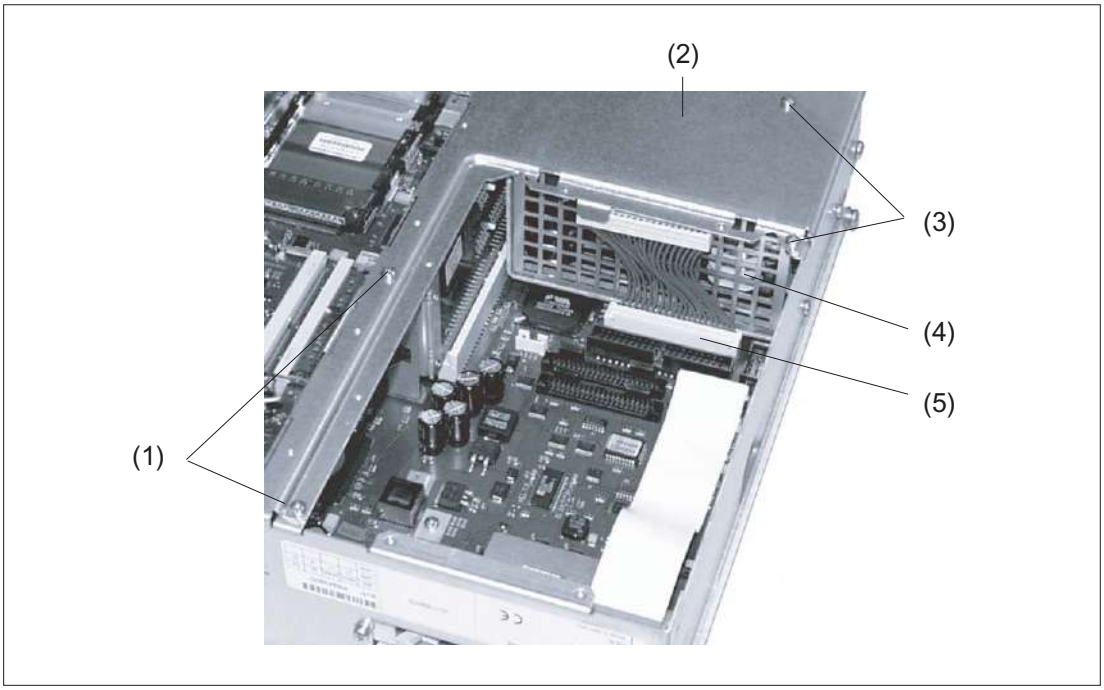

Figure 18-17 Removal/installation of the power supply (Art. No. A5E 00100846)

(1) Retaining screws
(2) Power supply cover
(3) Retaining screws
(4) Power Supply
(5) Connector for power supply

18.7.2.3 Device fan

Procedure

1. Open the casing by loosening the casing cover screws (see Section: "Description", figure "Top view of PCU 50").
2. Pull the top, long card (if inserted) out of the PCI slot (see Section: "Accessories", figure: "Mounting an expansion board").

3. Remove the card guide rail by taking out the split rivets (see Fig. below).
4. Pull the device fan cable out of the socket (see figures, Section: "Battery").
5. Pull the two split rivets, then the hollow rivets outward (see figures, Section: "Battery").
6. Change the device fan.
7. Installation is in reverse order.

Note

When installing the device fan, note the direction of flow from the device fan (blower outward; note the arrow on the device fan casing).

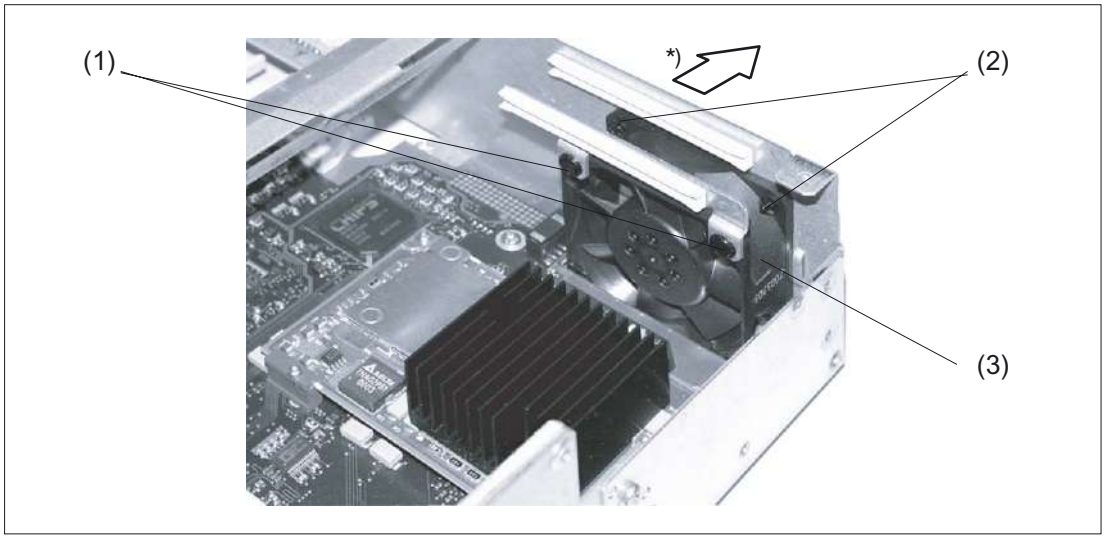

Figure 18-18 Device fan replacement PCU 50 ≤ 500 MHz

(1) Split rivets for fastening the card guide rail
(2) Split rivets for device fan fastening
(3) Device fan
*) Direction of air flow

18.7.2.4 Battery

Battery supply for clock and configuration

A backup battery (3.0 V lithium battery) supplies the hardware clock with power even when the device has been switched off. In addition to the time, the BIOS settings of the device are also stored. If the backup battery fails to operate or if it is separated from the plug contact, these data are lost.

Thanks to the low power consumption of the clock and the high capacity of the lithium battery, the battery can back up the clock for at least 8.5 years. For this reason, changing the battery is hardly ever necessary.

Battery voltage too low

If the battery voltage is too low, the current time will be lost and a correct device configuration can no longer be ensured.

In this case, the backup battery must be replaced with a new one. The battery is located on the motherboard (see figure below).

⚠WARNING

Risk of injury, material damage, release of hazardous substances.

A lithium battery can explode if handled incorrectly. Pollutants can be discharged if all batteries are not disposed of correctly.

Do not throw new or discharged lithium batteries into a fire. Do not solder the cell body. Do not recharge lithium batteries. Do not force open lithium batteries.

Lithium batteries should only be ordered from Siemens (Order No.: A5E00331143)

Wherever possible, all lithium batteries should be returned to the battery manufacturer/recycler and disposed of as special waste.

Changing the battery

The reference diagrams for the PCU 50 ≤ 500 MHz **(A)** and the PCU 50 > 500 MHz **(B)** can be found at the end of the description of the procedure.

1. Turn off the device, remove the main power cable and release all interconnecting cables.
2. Open the casing by loosening the casing cover screws (see Section: "Description", figure "Top view of PCU 50").
3. Pull the battery plug out of the socket on the motherboard and remove the battery fastener (see Section: "Accessories"→ "Expansion boards", figure: "Mounting an expansion board").
4. Install the new battery and secure it.
5. Reconnect the battery connector to the motherboard.
6. Close the device.

Reference diagrams

(A)

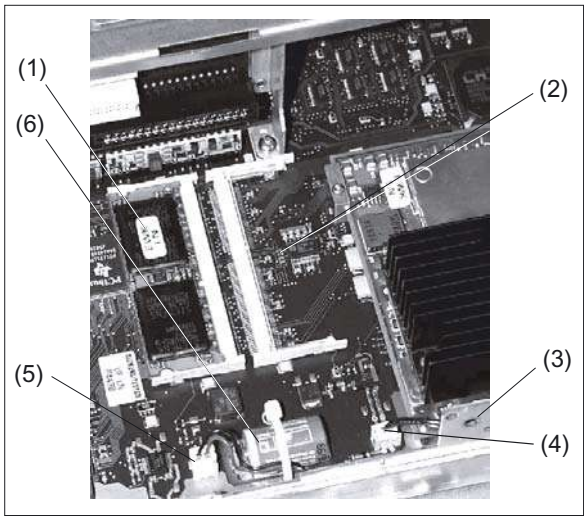

Figure 18-19 Main board PCU 50 ≤ 500 MHz (cut-out) with location of RAMs and backup battery

(1) RAM bank 0
(2) Socket for RAM bank 1 (not assigned)
(3) Locating hole for board retainer
(4) Connector for device fan
(5) Connector for battery connector
(6) Backup battery

(B)

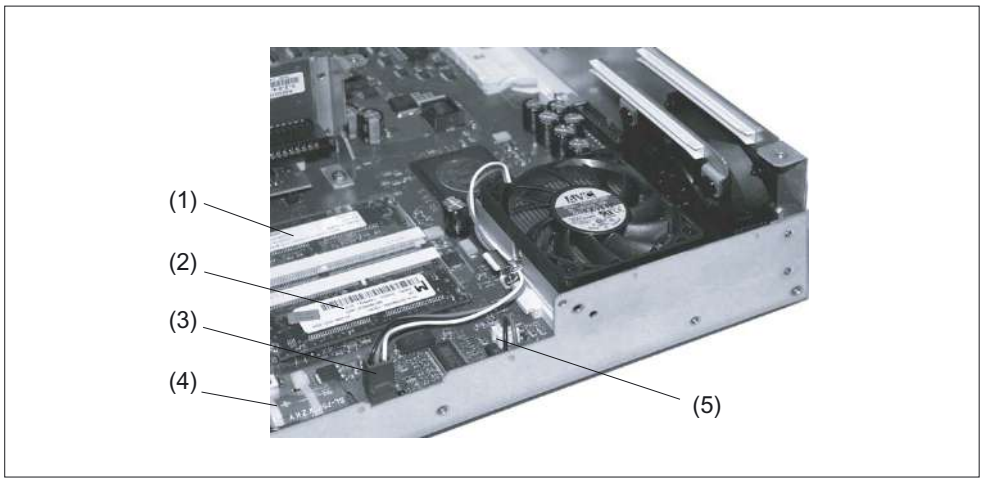

Figure 18-20 Main board PCU 50 > 500 MHz (cut-out) with location of RAMs and backup battery

(1) RAM bank 1
(2) RAM bank 0
(3) Connector for connecting the processor fan
(4) Backup battery
(5) Connector for device fan

18.8 Accessories

18.8.1 Overview

The following accessories are available for the PCU 50:

Component		Order No.:	
Component PCU 50		PCU 50 _ 500 MHz:	PCU 50 > 500 MHz
		6ES7791–0KS00–0XA0 6ES7791–0KT00–0XA0	6ES7648–2AC10–0CA0 6ES7648–2AC20–0CA0
Mounting bracket	standard [1] flat [2] upright [2] central [3]	6FC5248–0AF20–2AA0 6FC5248–0AF20–0AA0 6FC5248–0AF20–1AA0 6FC5248–0AF20–3AA0	
Memory expansion [4]		PCU 50 _ 500 MHz (SO–DIMM PC 100)	PCU 50 > 500 MHz (SO–DIMM PC 133)
	128 MB 256 MB	6ES7791–0KS00–0XA0 6ES7791–0KT00–0XA0	6ES7648–2AC10–0CA0 6ES7648–2AC20–0CA0
Expansion boards		(according to AT/PCI specification)	
Floppy disk device (parallel connection; see section: "3.5" Floppy Disk Drive".		6FC5235–0AA05–0AA1	
Floppy disk device (USB connection; see section: "3.5" Floppy Disk Drive with USB interface")		6FC5235–0AA05–1AA1	

[1] for PCU or videolink receiver behind operator panel front

[2] for PCU + videolink transmitter in control cabinet (see Section: "Distributed installation")

[3] for PCU + videolink transmitter behind the operator panel front (see Section: “Distributed configuration”)

[4] see figures in Section: "Spare parts" → "Replacement" → "Battery"

18.8.2 Description of components

18.8.2.1 Mounting bracket

In the section: "Mounting Preparation", the four mounting options for the PCU 50 have already been described.

A special set of mounting brackets is available for each of these mounting options. You will find the respective order numbers in section: "Accessories" → "Overview".

18.8.2.2 Memory expansion

There are two slots on the mother board for 144-pin SO DIMM memory modules (see figures in Section: "Spare parts" → "Replacement" → "Battery"). You can use these modules to expand the user memory of the PCU by up to 512 MB.

Standard memory

The basic configuration is a 128/256 MB SDRAM module.

Memory (MB)	64 MB module	128 MB module	256 MB module
128	2	–	–
128	–	1	–
192	1	1	–
256	–	2	–
256	–	–	1
320	1	–	1
384	–	1	1
512	–	–	2

Mounting

1. Open the casing by loosening the casing cover screws (see Section: "Description"), figure: "Top view of PCU 50").
2. Insert the module(s) into the base (see Section: "Spare parts" → "Replacement" → "Battery", figure: "Main board PCU 50 ≤ 500 MHz with location of RAMs and backup battery"). When doing so, pay attention to the recess (anti-rotation element) on the plug side of the SODIMM module.
3. Press the module(s) downwards, applying slight pressure until the locking snaps into place.
4. Close the device.

CAUTION
Risk of damage! The submodules must be seated firmly in the receptacle, otherwise they may fall out and be damaged.

System boot

The memory configuration is detected automatically when the system is booting (see IAM: Start-up Guide, Section: "System boot")

Memory optimization (Windows NT *)

After expanding the memory, it is advisable to then optimize the use of the computer resources.

To do this, in the Windows interface Control Panel, increase the size of virtual memory (also called the "SWAP file") to correspond to the memory extension.

Proceed as follows:

1. When booting, use the Service menu to start the SINUMERIK Desktop, as described in the "HMI Advanced installation and startup (IM4)" document in Subsection 3.4.5.
2. Activate the Control Panel by means of "Start" → "Settings" → "Control Panel".
3. In the Control Panel, choose "System" → "Performance" → "Virtual Memory" → "Change". This will display a window corresponding to the figure below.
4. Modify the values "Initial Size" and "Maximum Size". These should be the same size and exceed the installed RAM by at least 12 MB.

   *) For Windows XP: See IM4 (Start-up Guide for HMI Advanced).
5. Activate the "Set" menu button and exit the menu by pressing "OK".

Typical recommended values:

Memory capacity (MB)	Initial Size	Maximum Size
512	550	550

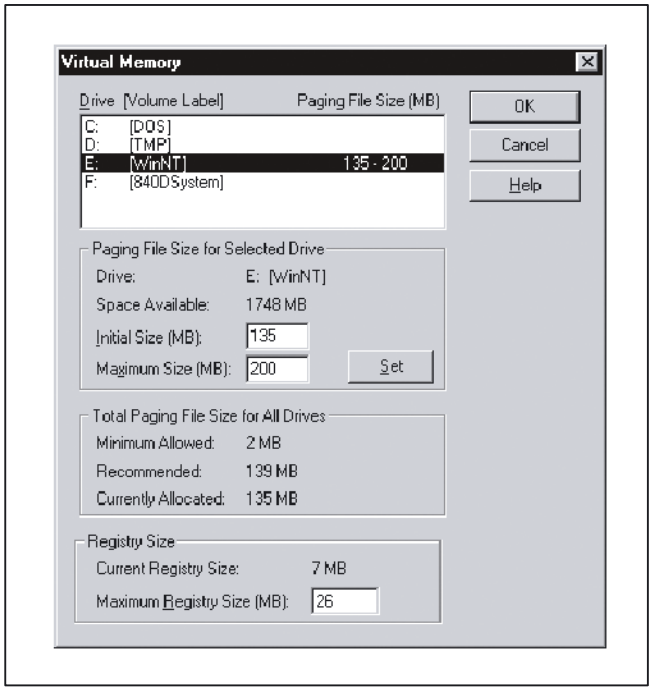

Figure 18-21 Adjusting the virtual memory

Note

In the event of a repair and return of equipment, the memory extension is taken into account.

In the event of a spare parts and return goods service, the memory extension is not taken into account.

18.8.2.3 Expansion boards

The PCU 50 is designed for use of boards according to the AT/PCI specification (see Fig. "Slots for Expansion Boards").

Note

You must sign an OEM agreement before you can use PCI/ISA modules.

It is not recommended to use ISA modules, since with future PCUs, this interface is not installed.

The dimensions of the boards must not exceed the specified dimensions. Otherwise, contact problems, malfunctions and installation errors cannot be ruled out. The diagrams show cards of the full AT/PCI overall length. Depending on the slot, restrictions may apply with respect to the overall length.

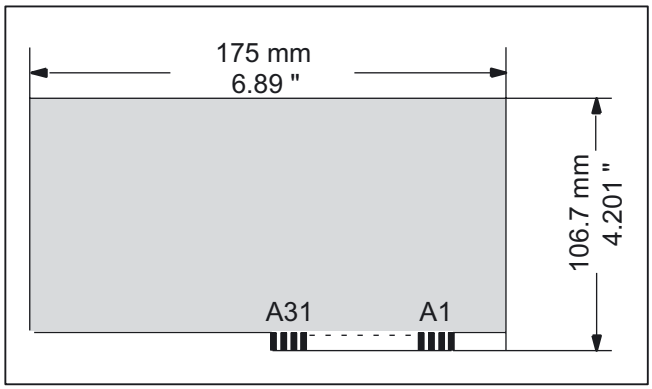

Figure 18-22 XT module

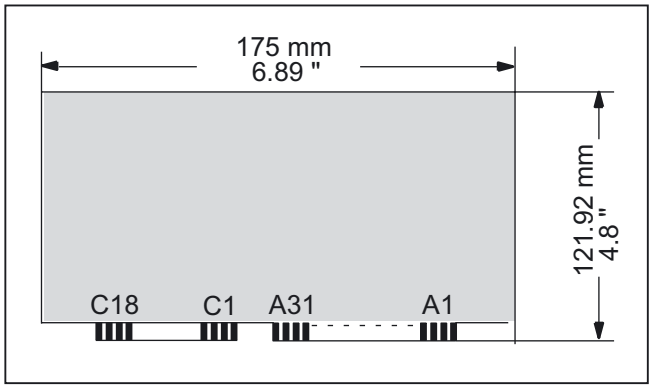

Figure 18-23 AT module

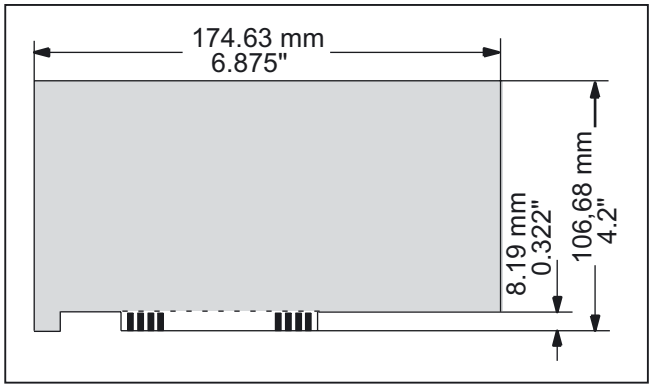

Figure 18-24 Short PCI module (5V)

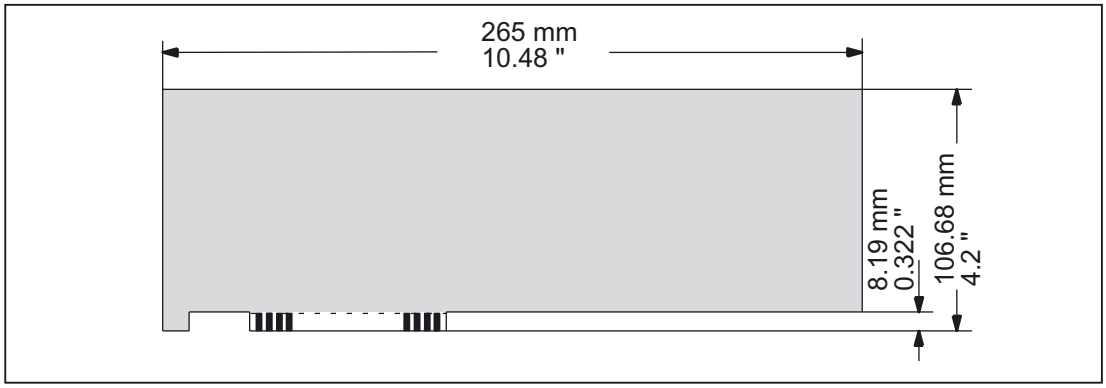

Figure 18-25 2/3-length PCI module (5 V)

Note

To allow longer PCI modules to be guided along the guide rails of ISA modules, they must be provided with a so-called extender. This should be included in the scope of supply of the longer PCI module.

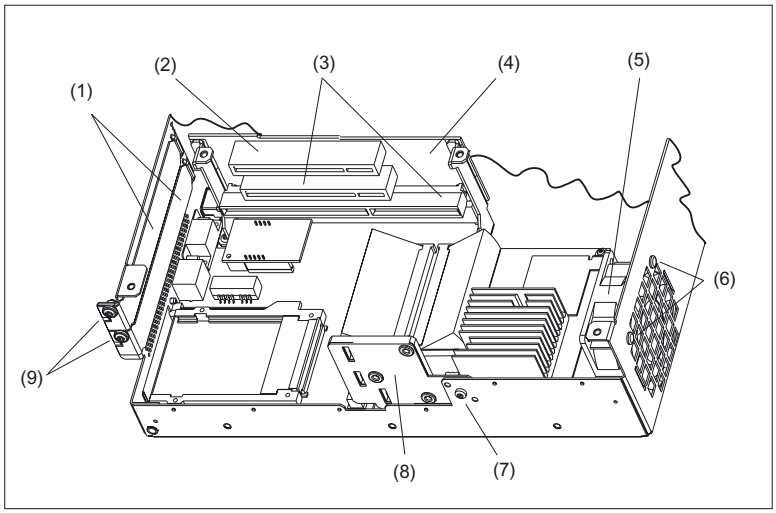

Figure 18-26 Expansion slots

(1) Cover plates
(2) PCI slot for expansion modules
(3) shared ISA/PCI slot (for expansion modules)
(4) Bus board
(5) Device fan
(6) Split rivets for device fan
(7) Retaining screw for module bracket
(8) Remove module bracket
(9) Retaining screws for slot cover plates and/or external module connections

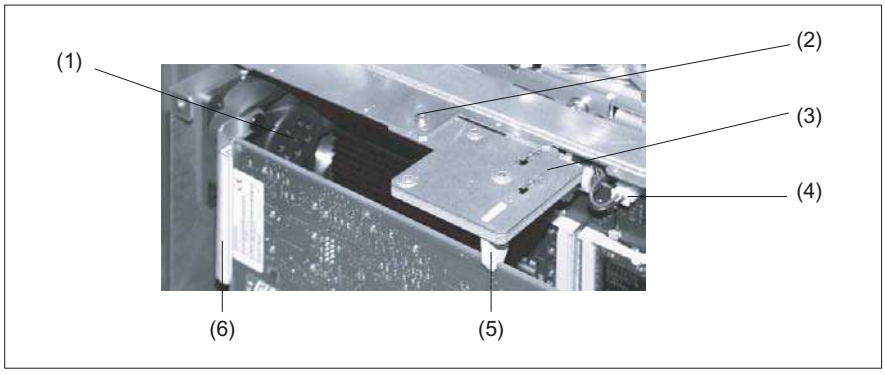

Figure 18-27 Mounting an expansion board

(1) Device fan
(2) Retaining screw for module bracket
(3) Remove module bracket
(4) Connector for battery
(5) Plastic support
(6) Guide rail for expansion board

Mounting

NOTICE
When installing PCI cards, ensure that you do not touch or smudge the golden plug connections of the card. This protects the card from malfunctioning.

1. Open the casing by loosening the casing cover screws (see Section: "Description"), figure: "Top view of PCU 50").
2. Release the fastening screw to remove the board retainer and remove the plastic support (if fitted) from its slot by pushing it through to the inside.
3. Remove the appropriate cover plate after loosening the fastening screw.
4. Carefully insert the module into the desired slot; firm seat should be ensured.
5. Screw the connecting plate of the module tight.
6. Mount the board retainer.
7. Locate the module by inserting a new plastic holder (enclosed) into the appropriate slot of the board retainer until it locates the edge of the module with its groove. Use a diagonal cutter to cut off the protruding part of the plastic holder.
8. Close the device.

PCU 50.3

19

19.1 Description

The powerful SINUMERIK PCU 50.3 not only has an integrated 150 W main power section but also all of the interfaces for communication via Ethernet and PROFIBUS DP and MPI already on board.

Four high-speed USB ports (USB 2.0) offer points where a keyboard, mouse and other peripheral devices can be connected.

A covered slot is available for CompactFlash cards (CF cards).

Two internal PCI slot connections are available for specific expansions.
A slot connection can be occupied depending on the device version.

Two 7-segment displays and/or LEDs are integrated for diagnostic purposes. These indicate the current operational state or, during powering up, the BIOS error codes.

The SINUMERIK PCU 50.3 is supplied with an operating system based on Windows XP.

Validity

The description applies to the following devices:

	Processor	Operating system	RAM (DDR2)	Other features	Order No.:
SINUMERIK PCU 50.3-C	Celeron M 1.5 GHz	WinXP ProEmbSys	512 MB		6FC5210-0DF31-2AA0
SINUMERIK PCU 50.3-P	Pentium M 2.0 GHz	WinXP ProEmbSys	1024 MB		6FC5210-0DF33-2AA0

Features

- Robust design (continuous operation, high noise immunity)
- Compact construction for space-saving installation
- Service-friendly layout (e.g. battery can be accessed externally)
- Can be expanded via two PCI cards (min. 140 mm to max. 288 mm in length)
- The installation location and length vary due to the different types of mounting and mounting brackets
- Integrated 2-digit diagnostics display and status LEDs (e.g. for operating without a monitor)

- Powerful processors
  - Celeron M 1.5 GHz, 400MHz FSB or
  - Pentium M 2.0 GHz, 533 MHz FSB
- Working memory of 512 MB or 1024 MB (DDR2-RAM), max. 2048 MB
- Hard disk drive with cable dampers and 2.5" S-ATA hard disk > 40 GB
- Operating system based on Windows XP
- Screen resolutions with 32 bit colors , 85 Hz)
  - 640 x 480
  - 800 x 600
  - 1024 x 768
  - 1280 x 1024
  - 1600 x 1200 (max.)
- Power supply: DC 24V, 150 W with On / Off switch
- Interfaces to peripheral devices:
  - PROFIBUS / MPI (max. 12 MBaud)
  - DVI-I interface for external monitor
  - 2 Ethernet connections of 10/100 Mbit/s
  - CF card shaft (covered)
  - 4 high-speed USB ports (USB 2.0)
- Interfaces to operator panel front:
  - LVDS panel interface (channel 1 and optional channel 2)
  - I/O USB panel interface
  - Additional high-speed USB port (USB 2.0)

View



Figure 19-1 Perspective view of PCU 50.3 (without plug-in card)

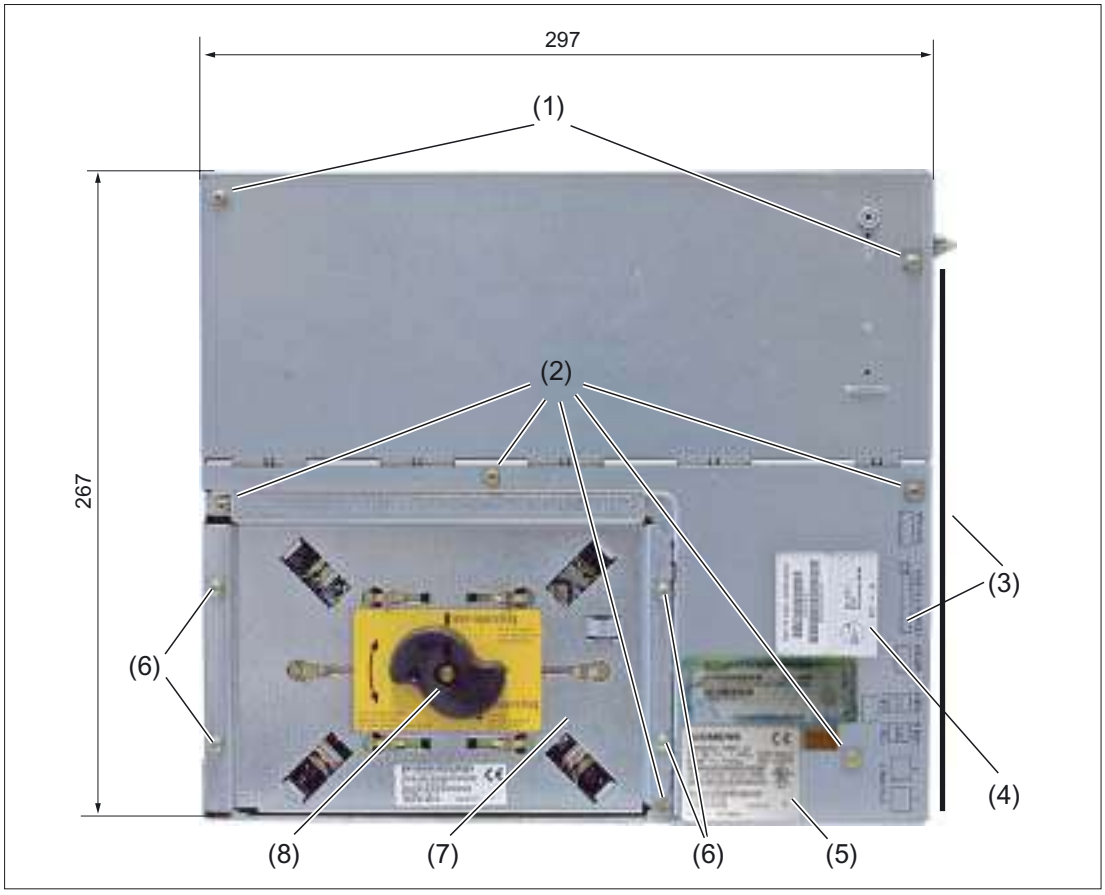

Figure 19-2 Top view of PCU 50.3

(1) Housing cover screws
(2) Power supply cover screws
(3) Interfaces on right side of housing (labeling of the interfaces on the upper side)
(4) Rating plate for power supply
(5) Component label (with designation, order no., series no., version of the device)
(6) Hard disk module screws
(7) Hard disk drive
(8) Handle for shipping lock

19.2 Operating and display elements

On / Off switch

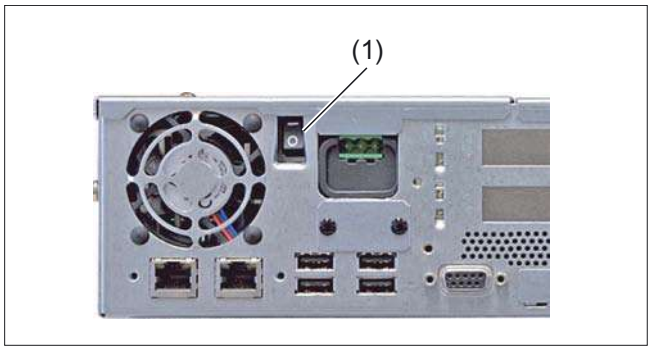

Figure 19-3 PCU 50.3 On / Off switch

The integrated 24 V main power section of the PCU is always switched on and off via the On / Off switch (1).
It also serves as a substitute for the reset button which is no longer provided.

⚠ WARNING
Before opening the device, always disconnect the main power plug because the On / Off switch does not guarantee separation of the power supply unit from the main power supply, from an electrical standpoint. When in switch position '0', the power supply unit is only placed in standby mode during which all output voltages are zero, but the main power section itself remains energized!

19.3 Interfaces

19.3.1 External interfaces

Right-hand casing side

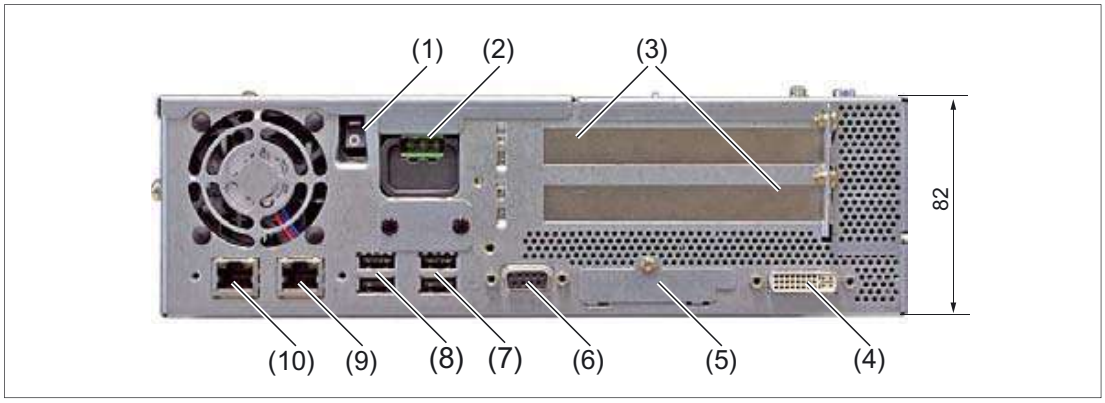

Figure 19-4 PCU 50.3 side view from right with interfaces (without plug-in card)

	Interface/connection		Function
(1)		Line breaker	On / Off switch (for standby) for the power supply unit
(2)	X1	Power supply connection	24 V DC, max. 190 W
(3)		PCI slot (Slot 1 / Slot 2)	2 slots for expansion modules
(4)	X302	DVI-I interface	Bus for external monitor (VGA monitors via optional adapter)
(5)	X4	CompactFlash card	Slot for CF card under cover plug, not hot plug-capable
(6)	X600	PROFIBUS DP/MPI	12 MBit/s connection for connecting an S7 automation unit, potential-separated
(7)	X41	USB 4 / USB 5	4 external high-speed USB connections (USB 2.0) - max. 2 can be operated at the same time as high-current [1)]
(8)	X40	USB 0 / USB 2	
(9)	X501	Ethernet 1	2 x 10/100 MBit/s, connections for local networks (LAN), RJ45
(10)	X500	Ethernet 2	

1) The max. current carrying capacity of the 4 USB connections is a total of 1.2 A.
The max. current carrying capacity of a USB connection is 500 mA.

Left-hand casing side

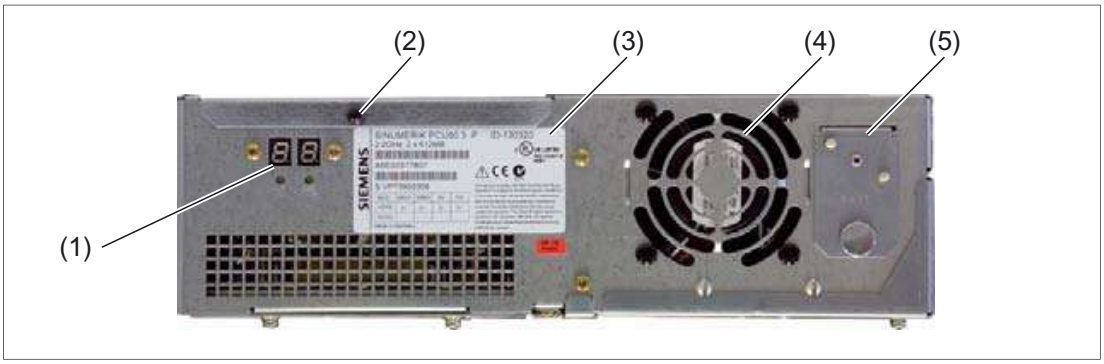

Figure 19-5 Side view of PCU 50.3 from left

(1) Status displays
(2) Cover plate with retaining screw
(3) Type plate of the PC unit
(4) Device fan
(5) Cover plate for battery

The cover plate (2) for the interfaces for connecting the operator panel fronts (see figure in Section: "Rear side of housing") is not installed at the factory and is delivered separately packaged.
Install it if the PCU 50.3 is built into a control cabinet.

Casing rear side

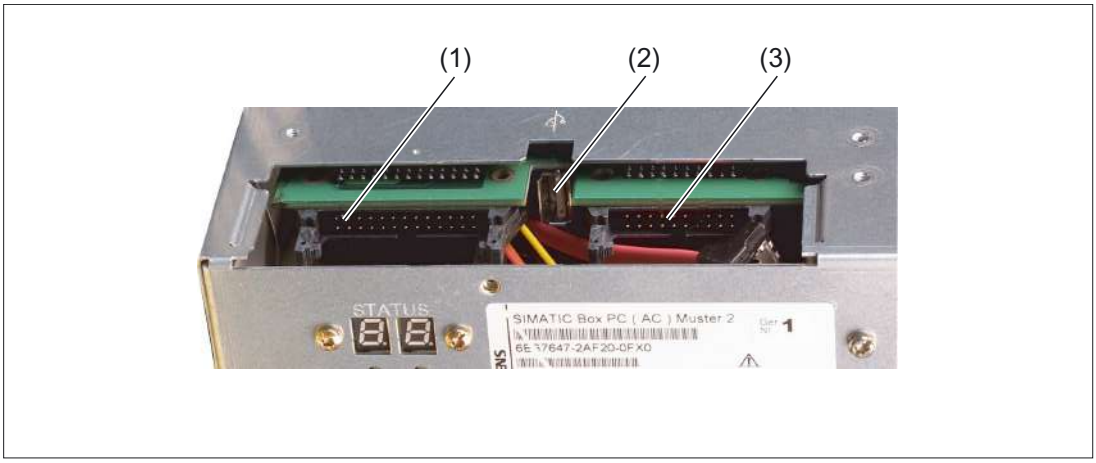

Figure 19-6 PCU 50.3 interfaces for connecting operator panel fronts

	Interface/connection	
(1)	X44	I/O interface for connecting the I/O cable of the operator panel front
(2)	X42	Optimum connection for the operator panel front with USB 2.0 front port
(3)	X400	LVDS interface for connecting a TFT display cable

Pin assignment for external interfaces

For the pin assignments of the individual external interfaces, refer to section: "Connection Conditions", section: "Secondary electrical conditions".

19.3.2 Internal interfaces

19.3.2.1 Connector assignment of motherboard

Overview

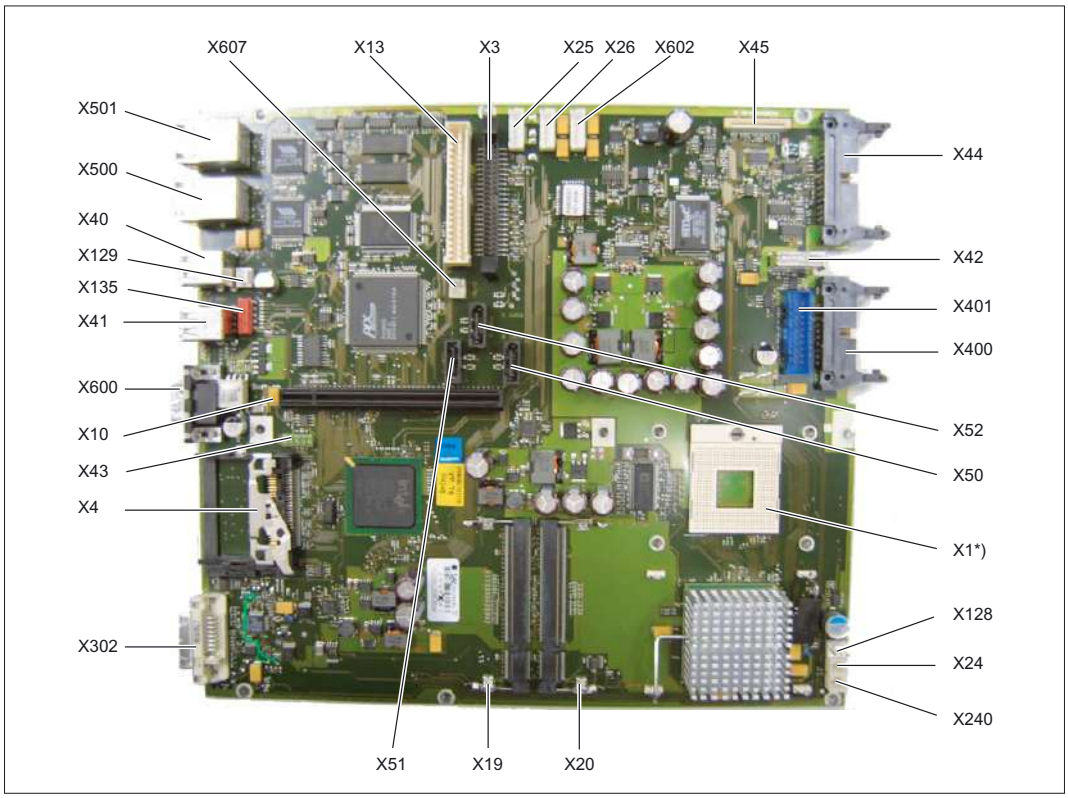

Figure 19-7 PCU 50.3 - Motherboard interfaces

*) Internal

Connector	Interface	Description
X1	Processor	Socket for FCPGA mobile processor
X3	Optical drive Parallel ATA	44-pin, 2 mm male connector
X10	Bus expansion	Socket for bus expansion, uses PCI bus signals
X13	Power supply	20-pin connection plug for power supply
X19 / X20	Memory	2 DIMM sockets, 64-bit

Connector	Interface	Description	
X24	Backup battery	Power supply for backup battery, 2-pin male connector	
X25		Power Supply	SATA 0
X26			SATA 1
X602			SATA 2
X43	USB port	USB channel 6 and 7	
X50	Serial ATA	Data cable for serial ATA	SATA 0
X51			SATA 1
X52			SATA 2
X128	Connection for equipment fan	Power supply for equipment fan, 3-pin male connector	
X129	Connection for PS fan	Power supply for CPU fan, 3-pin male connector	
X240	Tap for backup battery	Voltage tap (= 3V) of the backup battery, 2-pin, male connector	
X607		Lock status detection for MC hard disk module SATA	

Signal type:	
I	Input
O	Output
V	Power supply
-	Ground (reference potential) or N.C. (not connected)

Connection for DVD-ROM drive X3

Table 19-1 X3 connector assignment

Connector	Pin	Name	Type	Remarks
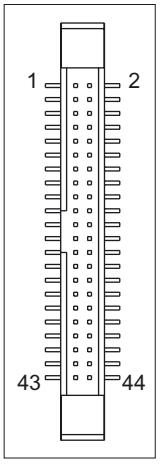	1	RESET	i	Reset
	2	GND	-	Ground reference potential
	3	D7	I/O	Data signal D7
	4	D8		Data signal D8
	5	D6		Data signal D6
	6	D9		Data signal D9
	7	D5	I/O	Data signal D5
	8	D10		Data signal D10
	9	D4		Data signal D4
	10	D11		Data signal D11
	11	D3	I/O	Data signal D3
	12	D12		Data signal D12
	13	D2		Data signal D2
	14	D13		Data signal D13
	15	D1	I/O	Data signal D1
	16	D14		Data signal D14
	17	D0		Data signal D0
	18	D15		Data signal D15
	19	GND	-	Ground (reference potential)
	20	N.C.	-	Do not use
	21	DREQ	I	DMA request
	22	GND	-	Ground (reference potential)
	23	IOW_N	O	I/O write (writing signal)
	24	GND	-	Ground (reference potential)
	25	IOR_N	O	I/O read (reading signal)
	26	GND	-	Ground (reference potential)
	27	IORDY	I	I/O ready (ready signal)
	28	-	-	Reserved
	29	DACK_N	O	DMA acknowledgment
	30	GND	-	Ground (reference potential)
	31	IOCS16	-	I/O Chip Select 16
	32	N.C.	-	Do not use
	33	AD_1	O	Address 1
	34	-	-	Reserved
	35	AD_0	O	Address 0
	36	AD_2	O	Address 2
	37	CS1_N	-	Chip Select 1
	38	CS3_N	-	Chip Select 3
	39	HDACT_N	I	HD active

Connector	Pin	Name	Type	Remarks
	40	GND	-	Ground (reference potential)
	41	P5V	V	+5V voltage supply (LOGIC)
	42	P5V	V	+5V voltage supply (MOTOR)
	43	GND	-	Ground (reference potential)
	44	-	-	Reserved

DC interface of the power supply X13

Table 19-2 X13 connector assignment

Connector	Pin	Name	Type	Remarks
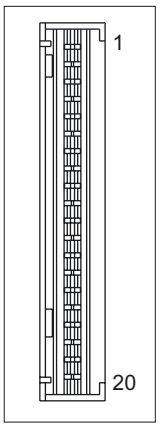	1	P5V	V	+5 V
	2	P5V		+5 V
	3	P5V		+5 V
	4	P5V		+5 V
	5	P5V		+5 V
	6	PS_NAU_N		Power loss early warning signal
	7	PS_PWROK		Power Good Signal
	8	GND	-	Ground
	9	GND		Ground
	10	GND		Ground
	11	N12V	V	-12V
	12	GND	-	Ground
	13	GND		Ground
	14	GND		Ground
	15	P12V	V	+12V
	16	P12V		+12V
	17	P3V	V	+3.3V
	18	P3V		+3.3V
	19	P3V		+3,3V
	20	P3V		+3.3V

Connector for backup battery X24

The battery for backing up the CMOS-RAM is connected to this connection.
A 3V lithium battery with a capacity of 750 mAh is used for this purpose.

Table 19-3 Assignment of the X24 connector

Connector	Pin	Name	Type	Remarks
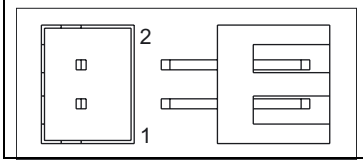	1	+	VI	Plus pole
	2	-	VI	Minus pole

USB port connector X43

Table 19-4 X43 connector assignment

Connector	Pin	Name	Type	Remarks
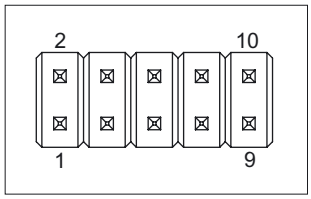	1	VCC 3.3V	O	+3.3 V, fused
	2	VCC 5V	O	+5 V, fused
	3	USB3	I/O	USB3_M
	4	USB5		USB5_M
	5	USB3		USB3_B
	6	USB5		USB5_B
	7	GND	-	Ground (reference potential)
	8	GND	-	Ground (reference potential)
	9	GND	-	Ground (reference potential)
	10	GND	-	Ground (reference potential)

Connection for equipment fan X128

Table 19-5 X128 connector assignment

Connector	Pin	Name	Type	Remarks
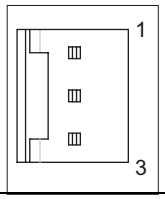	1	GND	-	Ground (reference potential)
	2	+12V	V	Switched power supply
	3	CPU FAN_CLK	I	Clock signal

Connection for power supply fan X129

Table 19-6 X129 connector assignment

Connector	Pin	Name	Type	Remarks
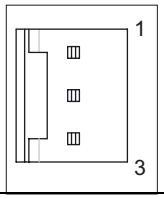	1	GND	-	Ground (reference potential)
	2	+12V	O	Switched power supply
	3	PG1 FAN_CLK	I	Clock signal

Tap for backup battery X240

This connection is intended for expansion modules with their own CMOS-RAM.
The voltage of the backup battery can be tapped here to back up the CMOS-RAM data of the expansion module.

Table 19-7 Assignment of the X240 connector

Connector	Pin	Name	Type	Remarks
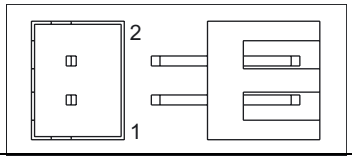	1	+	VO	Plus pole
	2	-	VO	Minus pole

NOTICE
No battery should be connected to this connection.

Lock status detection connection X607

This connection serves to detect a locked MC hard disk.

Table 19-8 Pin assignment of connector X607

Connectors	Pin	Name	Type	Note
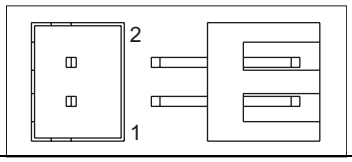	1	SATA_GP0	I	Detection input
	2	GND	-	Ground

19.3.2.2 Connector assignment of bus board

The bus board is designed as a link between the motherboard and the expansion modules. It is mounted using two screws.

The bus board has two PCI slots (1x short, 1x long).
Expansion modules can be installed acc. to the PCI specification (rev. 2.2) for 5 V and 3.3 V.
All PCI slots are capable of being masters.
The expansion modules are supplied with power via the bus board's connection to the motherboard.

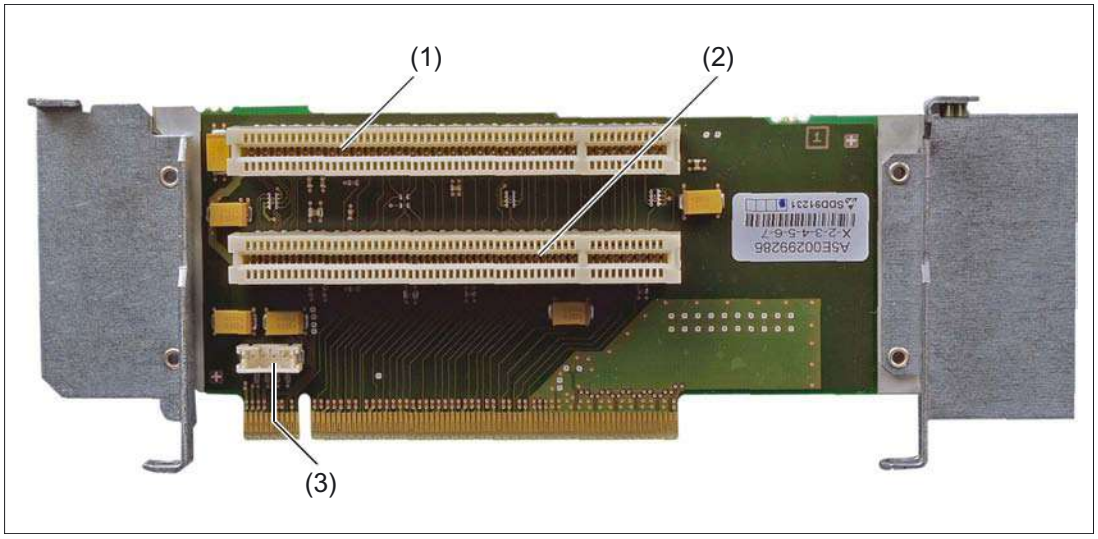

Figure 19-8 PCU 50.3 bus board

(1) Slot 1
(2) Slot 2
(3) 12V power supply connection for WinAC module

Interrupt assignment (PCI-IRQ)

PCU 50.3	PCI devices interrupt assignment (PCI IRQ)
INT - A	Graphics, USB A (channel 0+1), USB B (channel 2+ 3)
INT - B	Slot 1
INT - C	Slot 2
INT - D	Serial ATA
INT - E	Ethernet 1
INT - F	MPI/DP
INT - G	Ethernet 2, USB C (channel 4+5), USB D (channel 6 + 7)
INT - H	USB 2.0

Exclusive PCI hardware interrupt

Applications which have stringent requirements in terms of interrupt performance need a fast interrupt response time from the hardware.
The PCI hardware interrupt may only be assigned by one resource if a fast hardware response time is to be available.

To enable this, the Ethernet 1, PROFIBUS/MPI interfaces and the two slots each have an exclusive interrupt.

	IRQ assignments for Windows XP operating system (APIC mode)	IRQ assignments for DOS-based operating systems (PIC mode)
Ethernet 1	20	10
PROFIBUS / MPI	21	7
Slot 1	17	5
Slot 2	18	3

PCI slot pin assignment

	5V System Environment Side B Side A	
1	-12V	TRST#
2	TCK	+12V
3	Ground	TMS
4	TDO	TDI
5	+5 V	+5 V
6	+5 V	INTA#
7	INTB#	INTC#
8	INTD#	+5 V
9	PRSNT1#	Reserved
10	Reserved	+5V (I/O)
11	PRSNT2#	Reserved
12	Ground	Ground
13	Ground	Ground
14	Reserved	Reserved
15	Ground	RST#
16	CLK	+5V (I/O)
17	Ground	GNT#
18	REQ#	Ground
19	+5V (I/O)	Reserved
20	AD[31]	AD[30]
21	AD[29]	+3.3V
22	Ground	AD[28]
23	AD[27]	AD[26]
24	AD[25]	Ground
25	+3.3V	AD[24]

	5V System Environment Side B Side A	
26	C/BE[3]#	IDSEL
27	AD[23]	+3.3V
28	Ground	AD[22]
29	AD[21]	AD[20]
30	AD[19]	Ground
31	+3.3V	AD[18]
32	AD[17]	AD[16]
33	C/BE[2]#	+3.3V
34	Ground	FRAME#
35	IRDY#	Ground
36	+3.3V	TRDY#
37	DEVSEL#	Ground
38	Ground	STOP#
39	LOCK#	+3.3V
40	PERR#	SDONE
41	+3.3V	SBO#
42	SERR#	Ground
43	+3.3V	PAR
44	C/BE[1]#	AD[15]
45	AD[14]	+3.3V
46	Ground	AD[13]
47	AD[12]	AD[11]
48	AD[10]	Ground
49	Ground	AD[09]
50	CONNECTOR KEY	
51	CONNECTOR KEY	
52	AD[08]	C/BE[0]#
53	AD[07]	+3.3V
54	+3.3V	AD[06]
55	AD[05]	AD[04]
56	AD[03]	Ground
57	Ground	AD[02]
58	AD[01]	AD[00]
59	+5V (I/O)	+5V (I/O)
60	ACK64#	REQ64#
61	+5 V	+5 V
62	+5 V	+5 V

Pin assignment 12V power supply connection for WinAC module

Pin	Name	Signal type	Remarks
1	+12V	V	12V voltage
2	GND	-	Ground (reference potential)
3	GND	-	Ground (reference potential)
4	+5 V	V	5V voltage

19.4 Mounting

19.4.1 Preparation for mounting

Mounting of the PCU 50.3 depends on how it is going to be used. A distinction is made between the following types of mounting:

1. Standard mounting for assembly of PCU and operator panel front
2. Flat mounting for distributed configuration of PCU and video link transmitter
3. Upright mounting for distributed configuration of PCU and video link transmitter (optional: upright mounting without video link for server operations)
4. Central mounting for distributed installation of PCU and video link transmitter and operator panel front

A corresponding set of mounting brackets is required for each type of mounting. You will find the corresponding order numbers in section: "Accessories".

First, screw corresponding mounting bracket to PCU before mounting the PCU on an operator panel front or video link transmitter.

The diagram shows the PCU and mounting bracket (standard mounting) in correct orientation before screwing together (tightening torque M3: 0.8 Nm, tightening torque M4: 1.8 Nm).

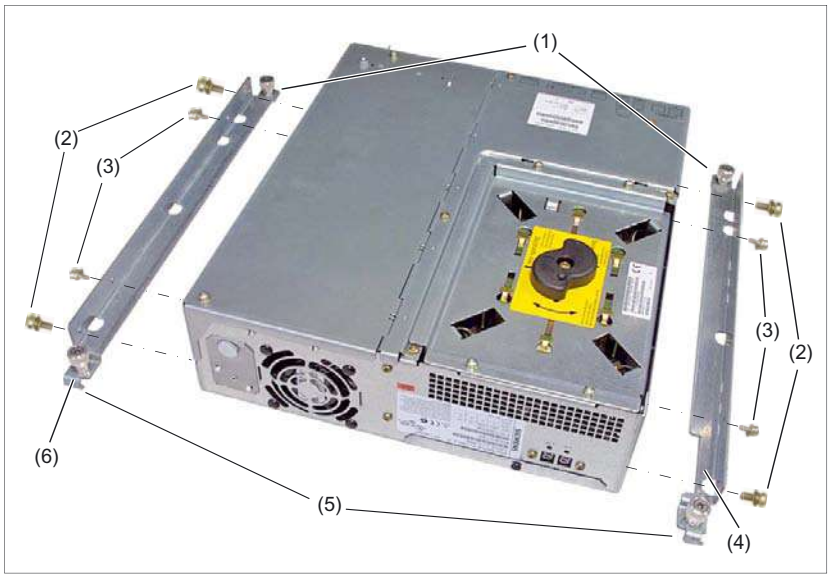

Figure 19-9 PCU 50.3 with mounting brackets (standard mounting)

(1) Lugs without hinged catch
(2) M4x8 countersunk screw with high tension ring and washer
(3) M3x8 countersunk screw with high tension ring and washer
(4) B bracket
(5) Lugs with hinged catch
(6) A bracket

⚠WARNING

Securing the PCU to ceiling or wall

Ensure that the wall or ceiling can support 4 times the total weight of the PCU (including mounting brackets and additional expansion modules).
The total weight of the PCU is a max. of 7 kg.

NOTICE

For installing the mounting brackets for the upright installation, use only M4x10 screws.
For all remaining mounting brackets, use M3x8 and M4x8, (provided).

The mainboard will be damaged if you
screw in the M3x8 and M4x8 screws without mounting brackets,
- or if you use other 8 mm screws (without a flat washer or tension ring) or
- longer screws,
- use the M4x10 screws for mounting the brackets on the PCU 50 (previous model).

Dimension drawings for mounting

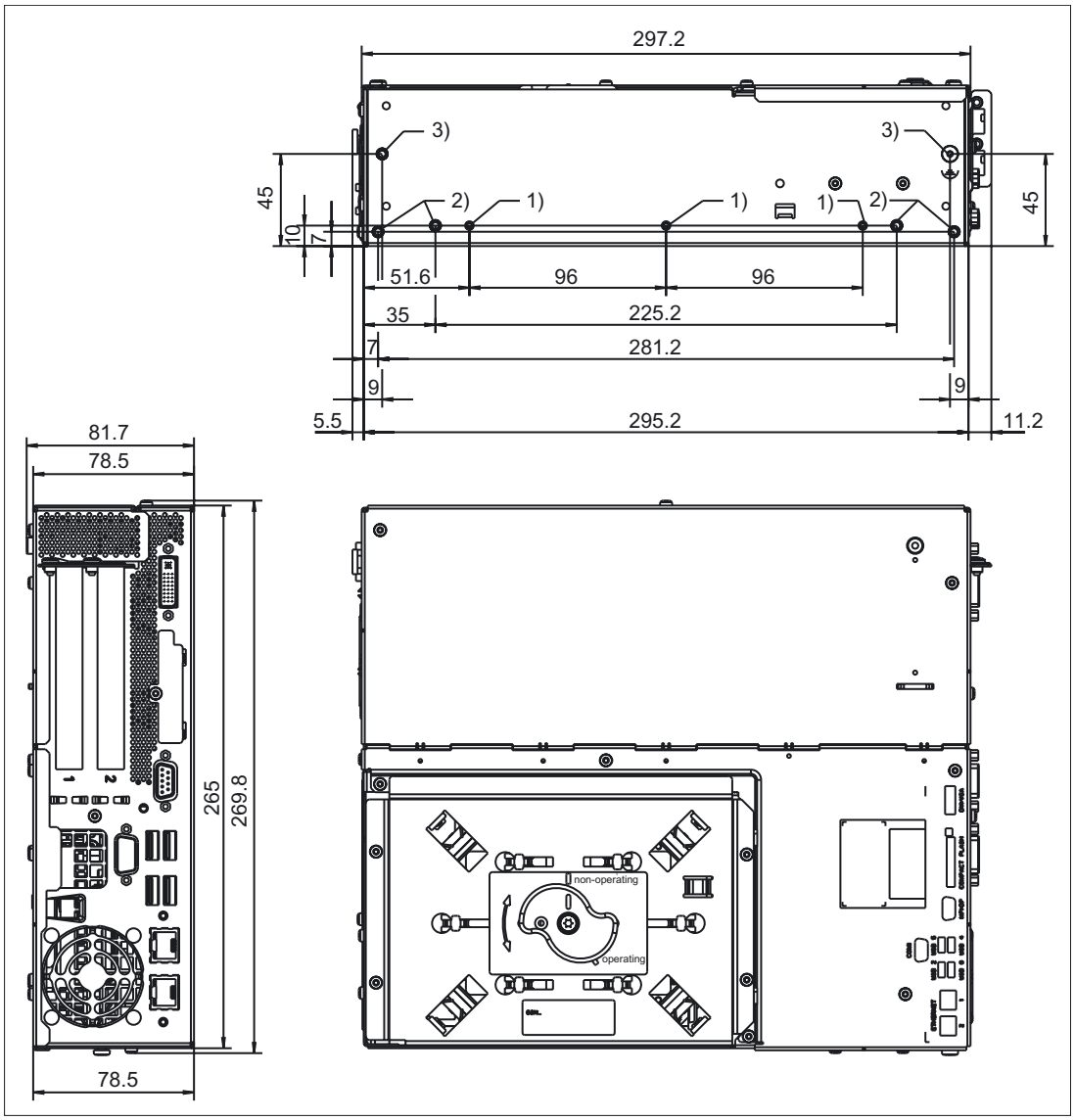

Figure 19-10 PCU 50.3 dimension drawing for mounting without ETH strain relief

All dimensions in mm

1) M3x8 countersunk screw with high tension ring and washer
2) M4x8 countersunk screw with high tension ring and washer
3) M4 (only present on this side)

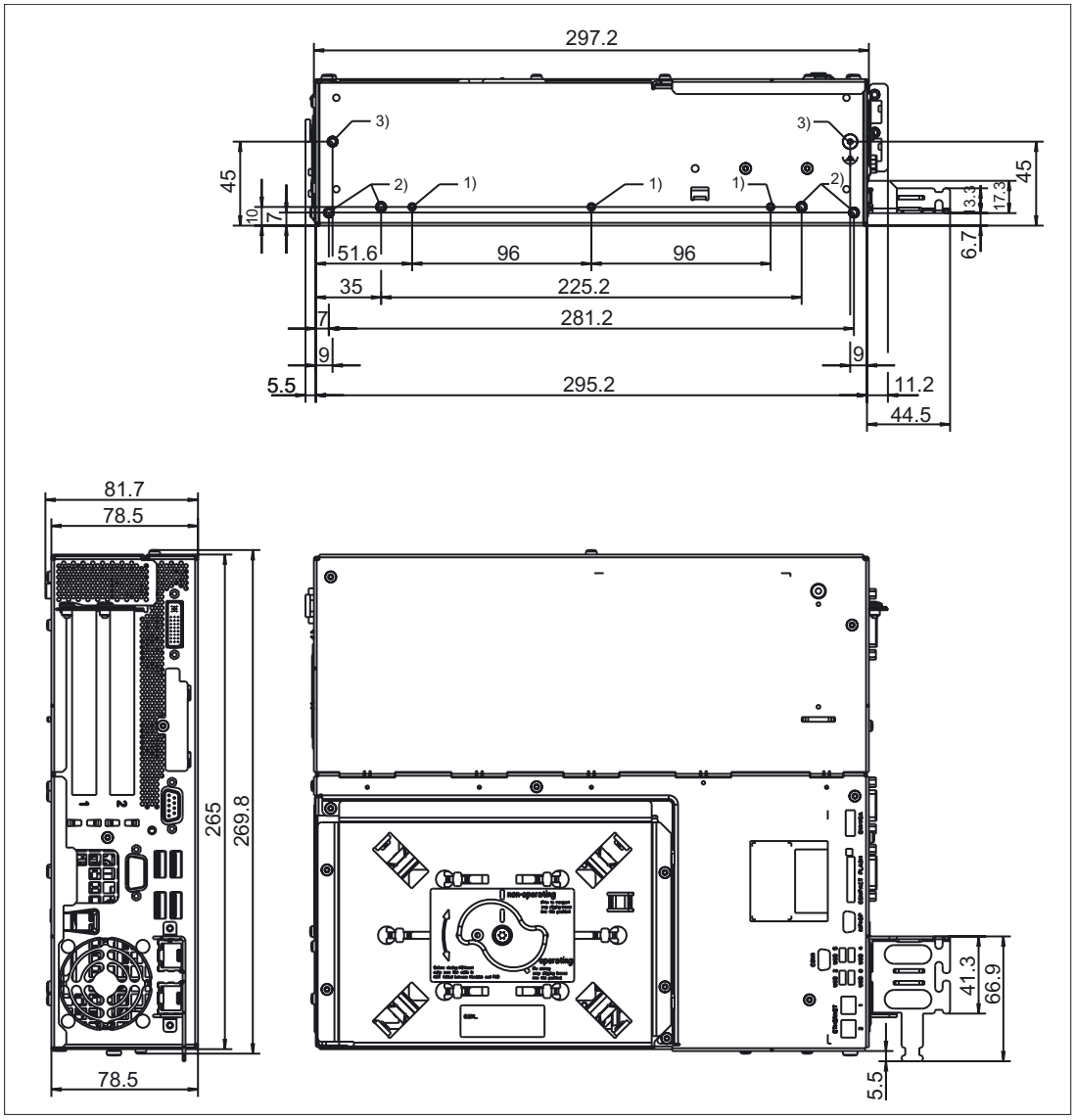

Figure 19-11 PCU 50.3 dimension drawing for mounting with ETH strain relief

All dimensions in mm

1) M3x8 countersunk screw with high tension ring and washer
2) M4x8 countersunk screw with high tension ring and washer
3) M4 (only present on this side)

19.4.2 Assembly of PCU and operator panel front

Install the PCU and operator panel front as described in section: “OP 012,” section: "Mounting" → "Assembling OP 012 and PCU."

19.4.3 Notes on installation

Observe the following during installation:

- Avoid extreme environmental conditions as far as possible.

  Protect the PCU from severe vibrations, jolts, dust, humidity and heat.
- An external fire protection housing is required.
- Do not expose the PCU directly to the sun's rays.
- Install the device in such a way that no danger (e.g. by falling down) may result.
- Ventilation clearances:
  - Both fan sides: 50 mm each.
  - On top, on the bottom, on the rear side: 10 mm (see Fig.)
- Make sure that the vent slots are not covered.

Permissible mounting positions of PCU 50.3 acc. to UL508

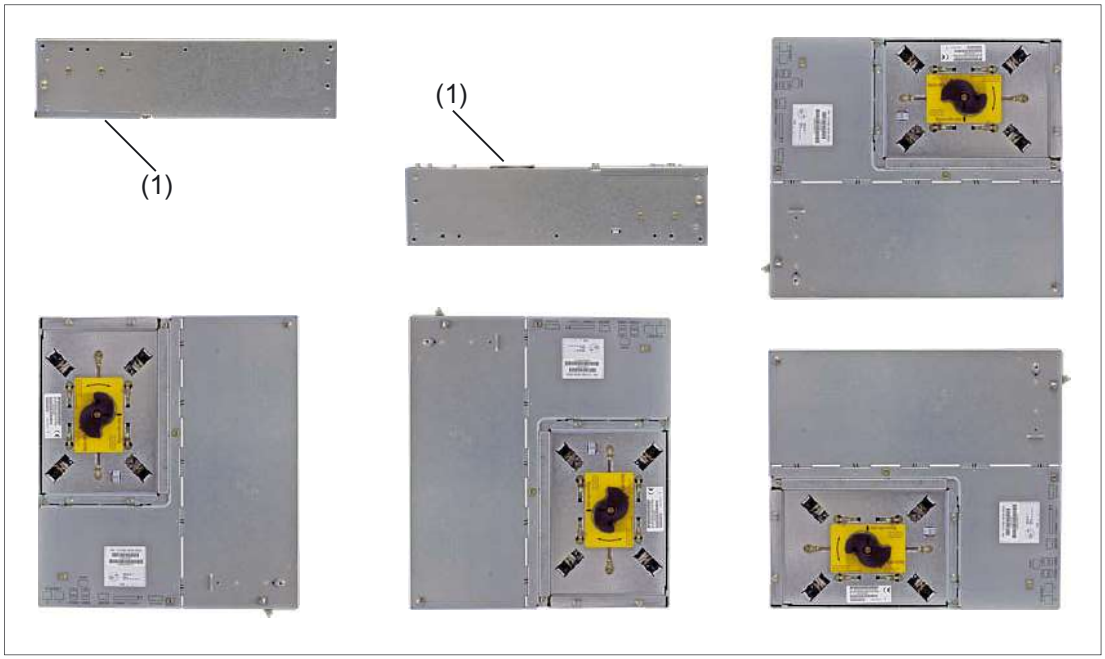

(1) Position of hard disk

Inclined position

On the basis of the standard mounting positions shown above (checked with a variance of ± 5°), an inclined position of up to ± 20° is permitted if sufficient ventilation is still ensured.

19.4.4 Mounting the Ethernet tension relief

The **ETH**ERNET strain relief serves to secure the main power connector on the PCU 50.3. The ETH strain relief is not mounted and is delivered in a separate package.

Procedure



1. Remove the cable ties (1), the ETH strain relief (2) and the two screws (M3) from the separate package.



2. Secure the ETH strain relief on the PCU by tightening the two screws with a Torx screwdriver T10.



3. Plug in the Ethernet cable.



4. Secure the Ethernet cable at the ETH strain relief with a cable tie.

19.4.5 Installing the anchor tie

The anchor tie **(2)** ensures strain relief for the cable to the USB interfaces. It has an interlock and can therefore be reused.

The anchor tie is supplied in a separate package from the factory.

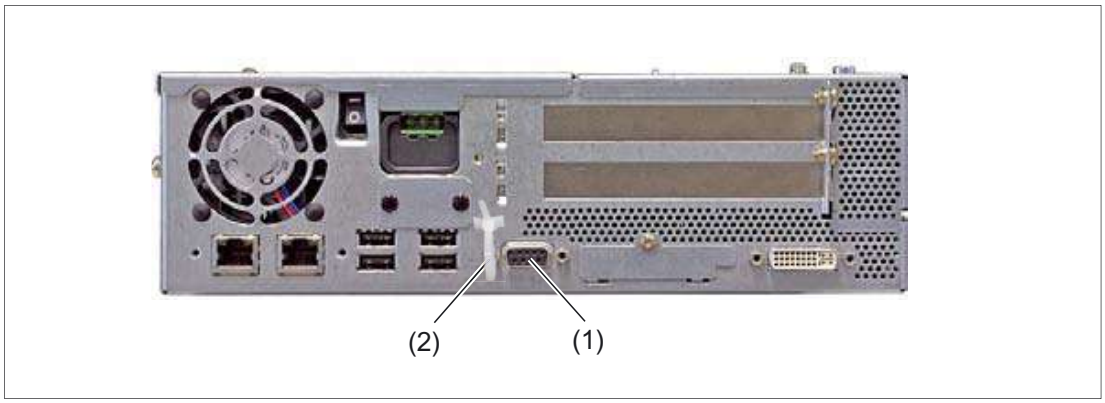

Figure 19-12 PCU 50.3 - anchor tie

Mounting

1. Press the anchor tie firmly in the drill-hole above the PROFIBUS DP / MP - interface **(1)**.
2. Undo the release and insert the USB cable.
3. After inserting the cable, tighten the anchor tie again, so that the cable is reliably relieved of strain.
4. Rotate the anchor tie in such a manner that the interfaces and connector remain freely accessible.

19.5 Connectors

19.5.1 Ground terminal

The ground terminal (1) of the PCU 50.3 is on the underside of the casing.



Figure 19-13 Underside of PCU 50.3

19.5.2 I/O devices

NOTICE
When connecting up I/O devices, check that they are suitable for industrial applications acc. to EN 61000-6-2:2001.

Operator panel front

If you are using the PCU together with an operator front panel, before switching on the PCU first connect up the operator front panel.

Note

The simultaneous operation of the operator panel and monitor is no longer a standard activation under Windows XP.

DVI / VGA monitor

Only switch on the PCU once you have connected the external monitor.
Otherwise, this interface is automatically deactivated.

CF card

Only switch on the PCU once you have plugged in the CompactFlash card.

The CompactFlash interface is not capable of acting as a hot-plug. Never plug-in or pull a card while the PCU is operating.

Units based on USB

You can connect or disconnect units based on USB (USB 1.1 or 2.0) during PCU operations if they are supported by the operating system (e.g. Windows XP).

Note

If you are using commercially available USB devices, the interference immunity of the entire system can be reduced. The end user takes responsibility for the use of such devices.

Information on which connection cable is required and how to adapt and set the interface can be found in the User's Manual for your I/O device.

19.5.3 DC power supply (24V)

The PCU 50.3 is supplied with 24 V DC voltage.

⚠WARNING

The cable cross-section must be adapted to the short-circuit current of the 24V DC power source so that no damage is caused by the cables if a short-circuit occurs.
Only cables with a cross-section of at least 1.3 mm^2 (AWG16) and maximum 3.3 mm^2 (AWG12) may be connected.

NOTICE

The 24V-DC power source must be adapted to the input data of the PCU (see section: "Technical data").

Connecting the PCU to the 24V-DC power supply

1. Ensure that the PCU's On/Off switch is in the '0' (Off) position to prevent unintentional startup of the device when connecting it to the power supply.
2. Switch off the 24 V DC power supply.
3. Connect the DC connector.

19.5.4 Equipotential

A low-impedance ground connection ensures that interference signals generated by external power supply cables, signal cables or cables to the I/O modules are safely discharged to ground.

The equipotential bonding terminal (1) on the device (large surface, large-area contact) must be connected with the central grounding busbar of the cabinet or plant in which the PCU is to be installed.
The minimum cross-section must not fall below 5 mm^2.



Figure 19-14 PCU 50.3 equipotential connection

19.6 Commissioning

19.6.1 Locking / unlocking hard disk

Protect the PCU hard disk drive during any form of transport by locking it.

Interlock

To lock the hard disk drive, turn the black rotary knob to the **"non-operating"** position.
The sensitive dampers are then reliably protected from damage during transport.

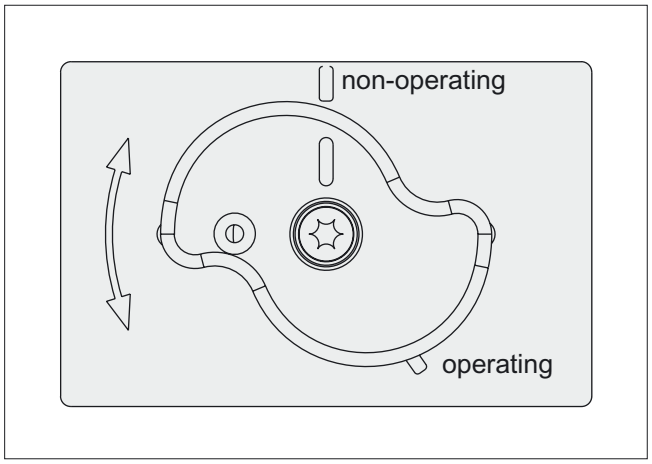

Figure 19-15 PCU 50.3 hard disk drive locked

Unlocking

To unlock the hard disk drive, turn the black rotary knob to the **"operating"** position.
The sensitive dampers are then reactivated for subsequent operations.

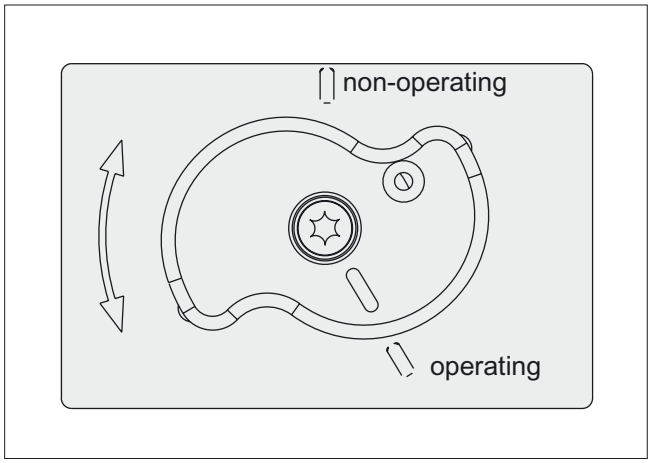

Figure 19-16 PCU 50.3 hard disk drive unlocked

Error message during locking

When the PCU BIOS is powered up, the system checks whether the hard disk drive has been unlocked.
If it has not been unlocked, the following error message is output on the screen:

"Error
System halted - hard disk drive (HDD) locked!
Please switch power off, remove HDD-interlock and reboot the system"

The status display is "A8" while the error message is output.

Action to take during error message:

1. Switch off the PCU.
2. Unlock the hard disk drive.
3. Switch the PCU on again.

19.6.2 System start

More information on the system start can be found in the manual "IM8 start-up of PCU base software."

19.6.3 Switching off / reset

Closing Windows XP

To close the Windows XP operating system, select "Start" → "Shut down".
This ensures that the system and operating system can be restarted without any problems.

Switching off the PCU

Once you have closed and shut down Windows XP, the power supply module of the PCU is still on.

If you also want to switch off the power supply module, tip the PCU's On / Off switch into the "0" position.

Reset

The PCU does not have a special reset button to restart the system.

If you want to enforce a system restart, use the On / Off switch to switch your PCU off and on again.

Note

When undertaking service work (opening the PCU), also disconnect the main power connector from the 24V power supply. This is the only way of totally de-energizing the unit!

19.6.4 Calibration of the touch screen

If you want to connect a new Touch Panel (TP 012 or TP 015A) to the PCU, you have to recalibrate the Touch Screen of the operator panel front.
Touch software, required for the calibration, is included in the basic Windows XP software.

Proceed as follows

A functioning touch panel system with PCU 50.3 is required.

1. Boot up the system in service mode.
2. Start the SINUMERIK desktop (password-protected).
3. Invoke the calibration menu from "Start" → "Programs" → "Touchware" → "Touchware" (see figure).

Note

On the TP 015A the default calibration is centrosymmetric to the center point. This means that you must press the top right of the screen to activate the "Start" button (bottom left).

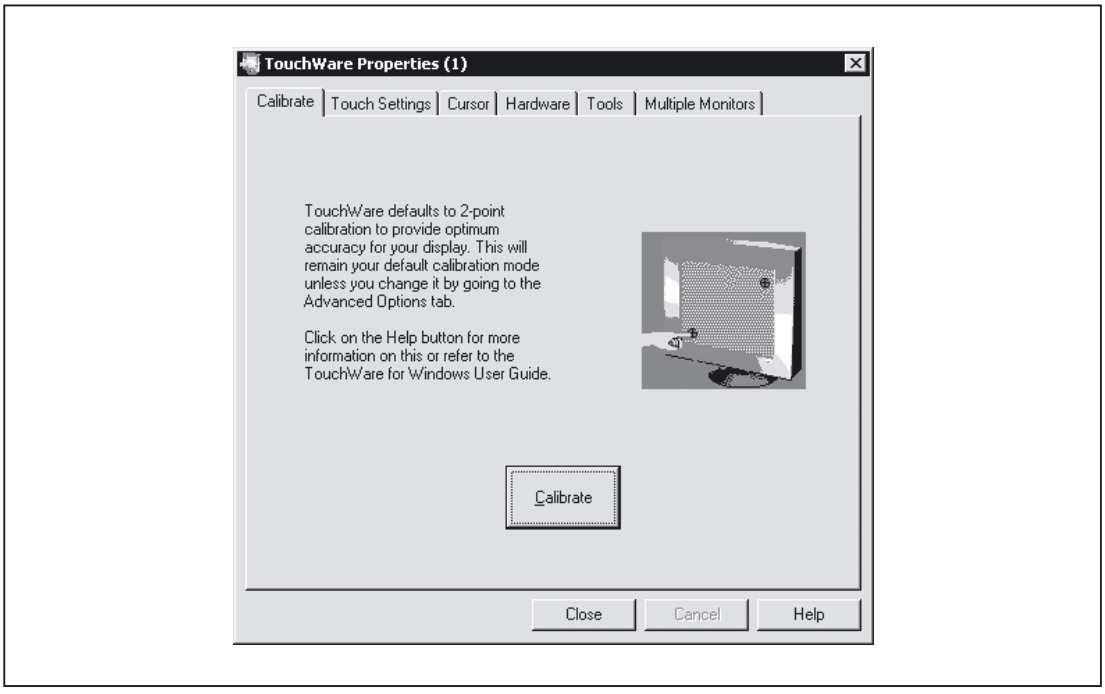

Figure 19-17 Menu for touch screen calibration (Touchware version 5.64 SR3)

Note

Depending on the software version and setting, the screen can include 2, 4 or 5 calibration points.

You can toggle between 2 and 5 points (Touchware version 5.63 SR3) or between 2 and 4 points (Touchware version 5.64 SR3) from the menu "Tools" → "Options" → "Advanced" → "Style".

4. Press the "Calibrate" button.
The following display will appear on the screen:



Figure 19-18 Calibration screen

5. Using the tip of a finger, touch the calibration point indicated by the hand symbol as precisely as possible for as long as the "Hold" prompt is displayed.
The "Hold" instruction disappears after a few seconds and the hand moves to the next calibration point.

6. Repeat the instructions in step 5 until all available points have been calibrated.
Once the calibration point parameters have been saved, the following menu appears:

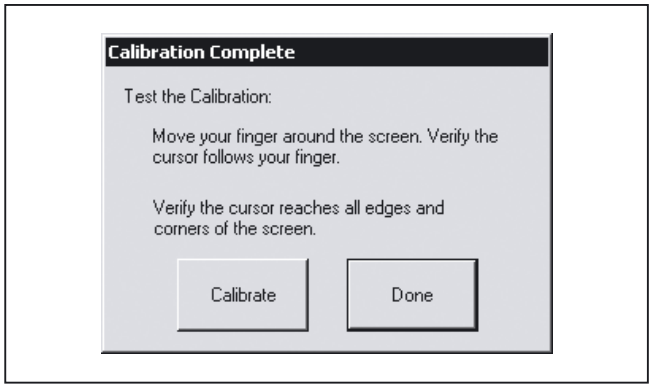

Figure 19-19 Test menu

7. To test the calibration values, move your finger around the screen and watch the cursor. If necessary, recalibrate using "Calibrate."

8. Exit the calibration menu via "Done" → "Close".

If you take too long on calibration, the whole process is aborted by a "timeout" and you have to start again from the beginning.

19.6.5 BIOS

19.6.5.1 BIOS powering up

Once you have switched the PCU on, the preinstalled system powers up automatically.

During powering up, the parameters saved in the BIOS setup take effect.

If necessary, you can reactivate the factory-preset parameters (default values) at anytime during the setup using the <F2> key.

1. Press the <F9> (default load) key to do this.
2. Store the settings by pressing the <F10> button (save settings).

Once powering up is complete, the start screen is displayed (see IM8: start-up of PCU base software).

Checking the boot sequence

If you want to check or change the boot sequence:

1. Switch on the PCU.
2. Press the <Esc> key (or <Alarm Cancel> on the operator panel), if you are prompted to do so.
   The boot list with all of the booted devices is displayed.
3. Select the desired boot device and press the enter key.

Booting using the USB FlashDrive

If you connect an external USB device or start from a boot-capable USB FlashDrive for servicing purposes, you have to manually call up the USB device from setup. Two options are available:

USB device is entered in boot list

1. Switch on the PCU.
2. Press the <F2> key.
3. Press the <Esc> key (or <Alarm Cancel> on the operator panel).
4. Select the corresponding USB device from the boot list.

USB device is not entered in boot list

1. Switch on the PCU.
2. Press the <F2> key.
3. Select the <Go to Setup> menu item to reach the Setup menu.
4. Go to the menu bar for <Boot>.
5. Use the '↓' button to reach the "Excluded from boot order" entry and select the USB device you want to enter in the boot list.
6. Press the 'x' key. The device is entered in the boot list
7. If you want to change the sequence of devices within the boot list, select the corresponding device and press the '+' key to move further up the list or the '-' key to move further down the list.
8. Then reboot the PCU.

PCU doesn't boot up

If the PCU no longer boots up as a result of incorrect settings in the BIOS:

1. Take the battery out (see section: "Spare parts" → "Replacement" → "Battery").
2. Bridge the pins of the PCU's battery connector for approx. 10 seconds with a conductive object.
3. Then wait approx. 1 minute.
4. Put the battery back in.
   All the BIOS settings (including time and date) are thereby reset.

5. You can set the time and date using the <F2> key.
6. Use the <F9> button to load the default values and the <F10> button to save these.

19.6.5.2 Changing the BIOS settings

If additional components (e.g. an external USB diskette drive) are attached or removed, you may need to change the BIOS settings (see section: "BIOS start up" → "Booting using the USB FlashDrive").

⚠WARNING

Only change the BIOS settings if you are fully aware of the consequences of doing so!

Incorrect settings may result in the entire system (including the operating system) no longer starting (see section: "BIOS start up" → "PCU not booting up").

Changing the BIOS settings using the standard keyboard

Creating your own user profile

Use the "User" profile in the setup menu if you need your own settings in the BIOS and want to permanently save these settings (also used after changing the battery).

1. Switch on the PCU and wait a few seconds.
2. Once you have been prompted to switch to the BIOS setup, press the <F2> button. The BIOS Setup menu will appear.
3. Select "User" under "Exit" → "Profile".
4. Make your specific settings in the other menu items.
5. Save the new settings permanently using the <F10> button by confirming the dialog with "Yes."
6. Your specific settings will be available once the machine has been restarted.

Calling up your own user profile

As soon as you select the "User" selection from the "Exit" → "Profile" setup setting and save with the <F10> button and "Yes," the values saved originally appear after a reboot, provided that you do not change any data (with the exception of the time and date).

Changing data (with the exception of the time and date) is the same as creating a new user profile (see "Creating your own user profile").

Changing the BIOS settings via an operator panel front

1. Switch on the PCU and wait a few seconds.
2. Once you have been prompted to switch to the BIOS setup, press the <F2> button. The BIOS Setup menu will appear.

3. Use the cursor keys for navigating in the menu to the desired selection field (e.g. "Disk A:").
4. Change the setting using the <+> key (press <SHIFT> and <X> at the same time) or the <–> key on in the numeric keypad.
5. You can also use the cursor keys <→> (right) and <←> (left) to reach other setup menu items.
6. Press the <Esc> button (<Alarm Cancel> button) to go to the "Exit" menu. (This menu can also be reached by pressing and holding down the <→> (right) cursor key.)
7. Press the <Input> key to quit the setup menu.
8. Press the <Input> key to confirm your decision to exit BIOS Setup with "Yes".

Then power up the system (see section: "BIOS start up").

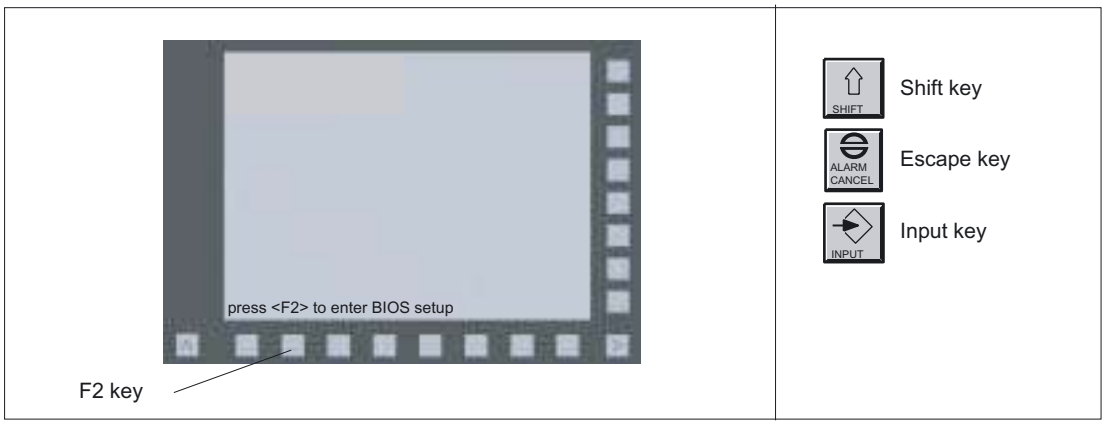

Figure 19-20 Using the BIOS Setup via an operator panel front

19.6.5.3 Status display

The status display consists of two 7-segment displays with two 2-color LEDs.

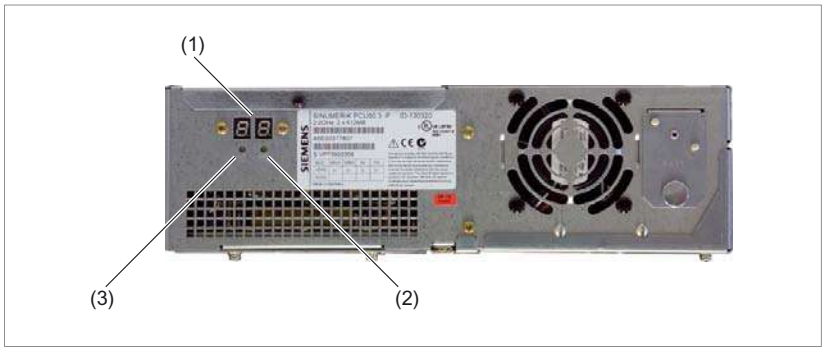

Figure 19-21 PCU 50.3 status display

(1) 2 x 7-segment display
(2) LED H2
(3) LED H1

Function of the 7-segment display

During the BIOS powering up process, the POST codes of the corresponding test stage are displayed.
Once power up has been completed correctly, code 00 is displayed.
If an error occurs, the POST code of the last test stage started is displayed.

Application codes can also be displayed if required.

Function of LEDs H1 and H2

During the BIOS powering up process, both LEDs light up in two colors (red and green) to test their function.
Both LEDs are switched off once powering up is completed correctly.

Applications can trigger the two LEDs if required.

19.7 Technical specifications

19.7.1 PCU 50.3

Safety			
Safety class	III (PLEV) acc. to EN 61800-5-1		
Degree of protection in accordance with EN 60529	IP 20		
Approvals	CE / cULus		
Electrical data			
Input voltage	24 V DC (20.4 V ... 28.8 V)		
Max. current output	USB external, each 0.5 A (in total: 1.2 A)		
	3.3 V	2 A	
	5 V	2 A	
	12 V	0.3 A	
	-12 V	0.05 A	
Power consumption	**PCU basic unit**	**PCI slots**	
	typ. 5.5 W (at 55 °C)	max. 15 W [1]	
Main power outage buffering time	min. 20 ms		
Mechanical data			
Dimensions (mm)	Width: 297	Height: 267	Depth: 82
Weight	Max. 7 kg		
Slot 1:	Card length max. 288 mm (measured without slot plate) [2]		
Slot 2:	Card length max. 175 mm (measured without slot plate) [2]		
Mechanical ambient conditions	**Operation**	**Transport** (in transport packaging)	
Vibratory load	10 - 58 Hz: 0.075 mm 58 - 200 Hz: 9.8 m/s² DIN IEC 60068-2-6	5 -9 Hz: 6.2 mm 9 - 200 Hz: 19.6 m/s² DIN IEC 60068-2-6	
Shock stressing	50 m/s², 30 ms 18 shocks DIN IEC60068-2-27	300 m/s², 6 ms 18 shocks DIN IEC60068-2-27	
Noise	< 55 dB(A) according to DIN 45635-1		
Climatic ambient conditions			
Heat dissipation	Open-circuit-ventilated		
Condensation, spraying water and icing	Not permitted		
Supply air	Without caustic gases, dusts and oils		
	Operation	**Transport** (in transport packaging)	
Applicable standards	DIN IEC 60068-2-1	DIN IEC 60068-2-2 / -2-14	

Climate class	3K5	1K3 / 2K4
Temperature limits	5 ... 55 °C [2]	-20 ... 60 °C
Temperature change	Max. 10 K/h	Max. 18 K/h
Limits for relative humidity	5 … 80% at 25 °C	5 ... 95% at 25°C
Permissible change in the relative air humidity	max. 0.1 % / min	

[1] All of the slots must not exceed this total output

[2] With total power of slots amounting to 15 W

19.7.2 DC power supply module of 24 V (integrated)

Technical data

Safety	
Protective class	III (PELV) acc. to EN 61800-5-1
Degree of protection in accordance with EN 60529	IP 20 (when mounted)
Approvals	CE / cULus
Electrical data	
Input voltage	DC 24 V (20.4 V ... 28.8 V)
Input current	Continuous current to 9 A (to 14 A for 30 ms at startup)
Power consumption	max. 190 W
Temperature-limited output power	max. 105 W (operation at 55 °C)
Main power outage buffering time	Min. 20 ms

Output voltages

Voltage	Max. current
+12 V	6.5 A, peak 8 A
- 12 V	0.3 A
+ 5 V	16.5 A [1], peak 18.5 A
+ 3.3 V	8.5 A [1]
1) The max. permitted accumulated power of the + 5 V and 3.3 V is 90 W.	

Power good signal on DC 24V power supply

(diagram)

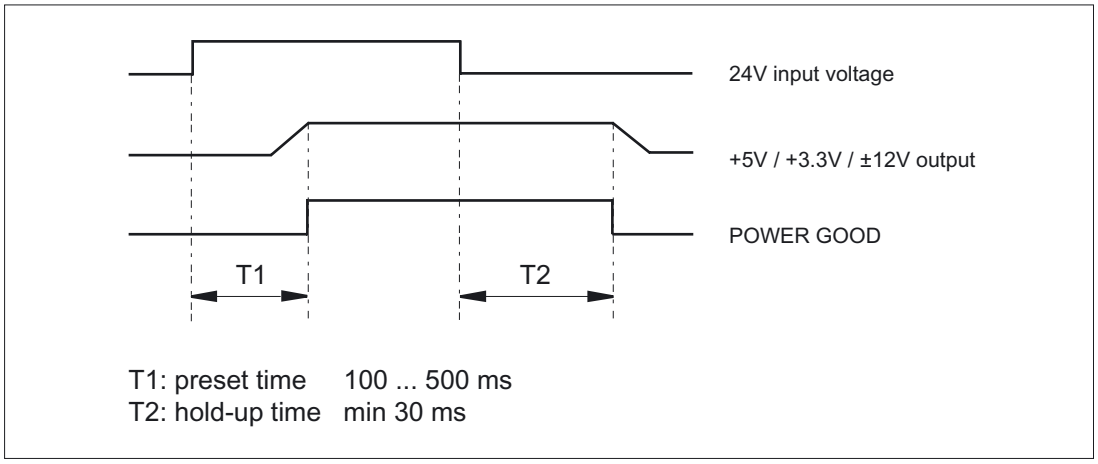

Figure 19-22 Power good signal on DC 24V power supply

NAU signal on DC 24V power supply

(diagram - main power failure alarm)

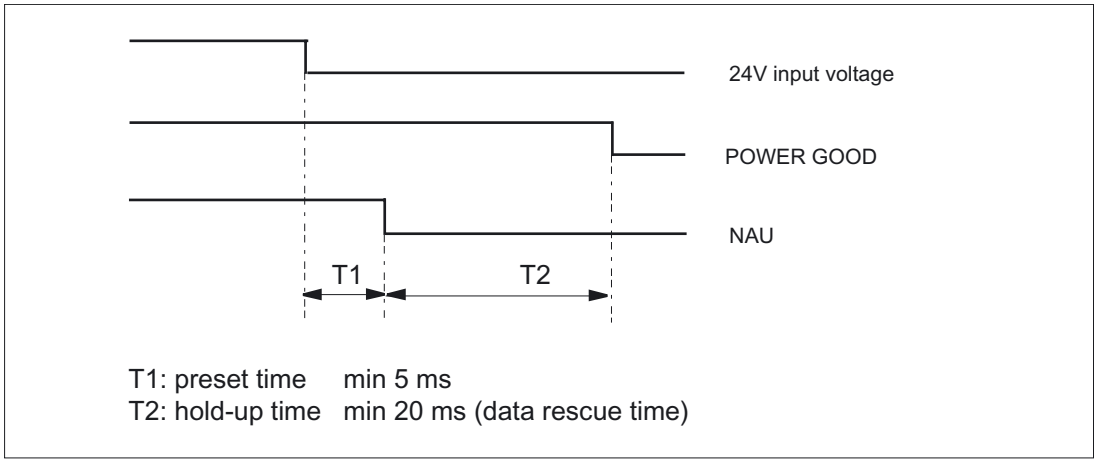

Figure 19-23 NAU signal on DC 24V power supply

19.8 Replacement parts

19.8.1 Overview

The following spare parts are available for the PCU 50.3:

Component	Order number
Hard disk with mounting plate and damper	6FC5247-0AF08-4AA0
Device fan (60 mm)	A5E00319306
Power supply module fan (50 mm)	A5E00319305
CMOS battery 3V lithium CR 1/2AA	A5E00331143
150W DC power supply (24V)	A5E00320852

19.8.2 Replacement

19.8.2.1 Hard disk drive

The installed hard disk drive is connected to the main board by three cables.

- S-ATA data cable
- Power supply cable
- Cable for detection of lock status

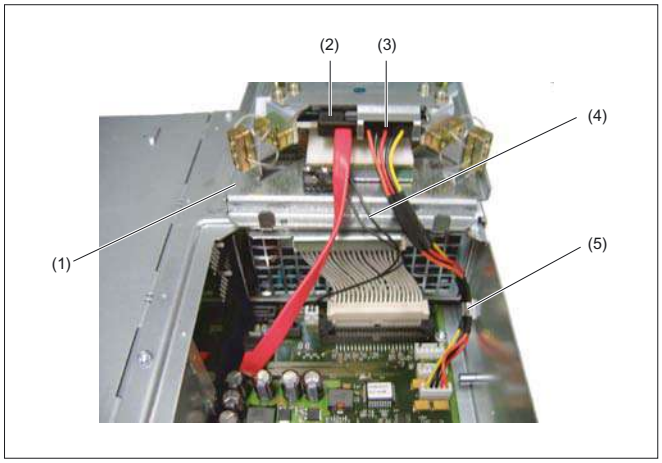

Figure 19-24 PCU 50.3 with hard disk drive folded up

(1) Hard disk module
(2) Ribbon cable (S-ATA) for hard disk connection to port 0
(3) Power supply cable of the hard disk module to X602
(4) Locking cable for switch to X607
(5) Fastening clip for power supply cable

Proceed as follows

1. Disconnect the PC from the power supply.
2. Lock the hard disk's transport lock by turning the black rotary knob to the **"non-operating"** position (see Fig. "PCU 50.3 hard disk module locked" in section: "Start up" → "Locking / unlocking hard disk").
3. Loosen the four fastening screws of the hard disk module.
4. Fold up the hard disk module (see Figure above).
5. Disconnect the ribbon cable (2) from the main board and note its position.
6. Also disconnect the other two cables (3) and (4) and note their slots on the main board.
7. When installing the new hard disk module, proceed in reverse order.
   The new module must be of the same type or a compatible successor.
8. Unlock the hard disk's transport lock by turning the black rotary knob to the **"operating"** position (see Fig. "PCU 50.3 hard disk module unlocked" in section: "Start up" → "Locking / unlocking hard disk").

19.8.2.2 Power supply

Removing the power supply

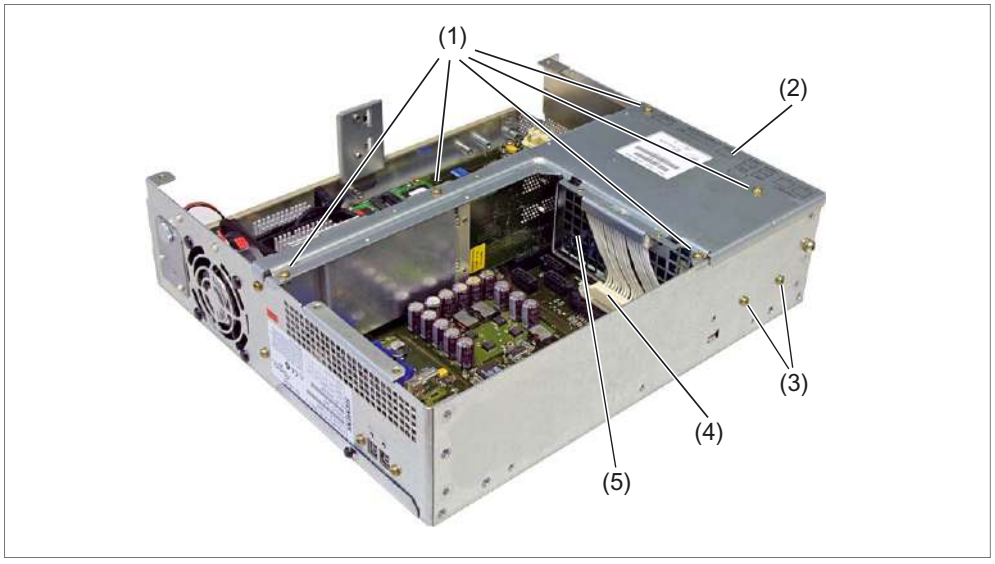

Figure 19-25 Removal and installation of PCU 50.3 power supply

(1) Retaining screws for the power supply cover
(2) Power supply cover
(3) Power supply retaining screws
(4) Connector for power supply
(5) Power supply

⚠ WARNING
The power supply may only be replaced by authorized personnel.

1. Disconnect the PCU from the power supply.
2. Lock the transport lock for the hard disk (see section: "Start-up" → "Lock/unlock hard disk") and remove the hard disk.
3. Undo the retaining screws (1) from the power supply cover (2) and take off the power supply cover.
4. Unscrew the power supply retaining screws (3) (Torx T10).
5. Disconnect the connection plug for the power supply (4) from the power supply.
6. Pull the power supply up and out of the casing.

Installing the power supply

Install the new power supply in reverse order.

Note

Observe the correct position of the resting hook of the power supply for upright bus boards.

19.8.2.3 Power supply module fan

To be able to replace the power supply module fan, you must first remove the power supply. You will find a description of this process in section: "Spare parts" → "Replacement" → "Power supply".

Removing the power supply module fan

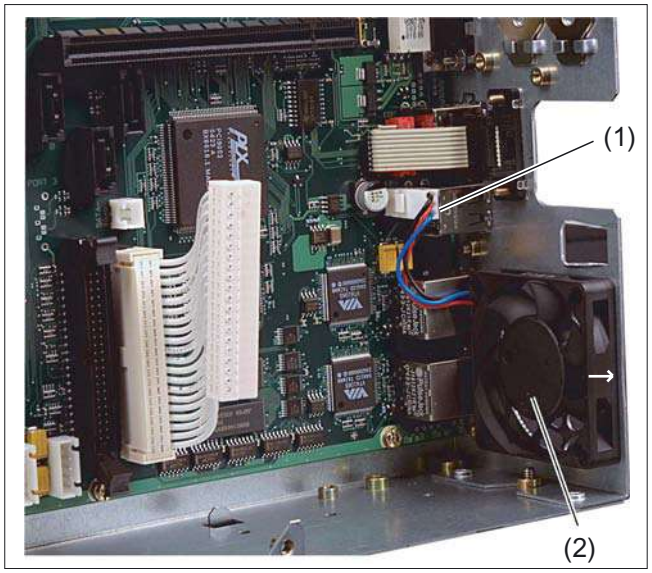

Figure 19-26 PCU 50.3 power supply module fan

(1) Connector for power supply
(2) Power supply module fan (correct installation position - fan blows outward)

1. Remove the power supply.
2. Remove the connector to the fan's power supply (1).
3. Loosen the four black plastic rivets or screws on the rear of the casing and take out the fan.

Installing the power supply module fan

Re-install the new fan in reverse order.
Ensure the correct mounting position is used (see arrow in diagram above).

NOTICE
Only a fan of the same type may be mounted.

19.8.2.4 Device fan

Removing the device fan

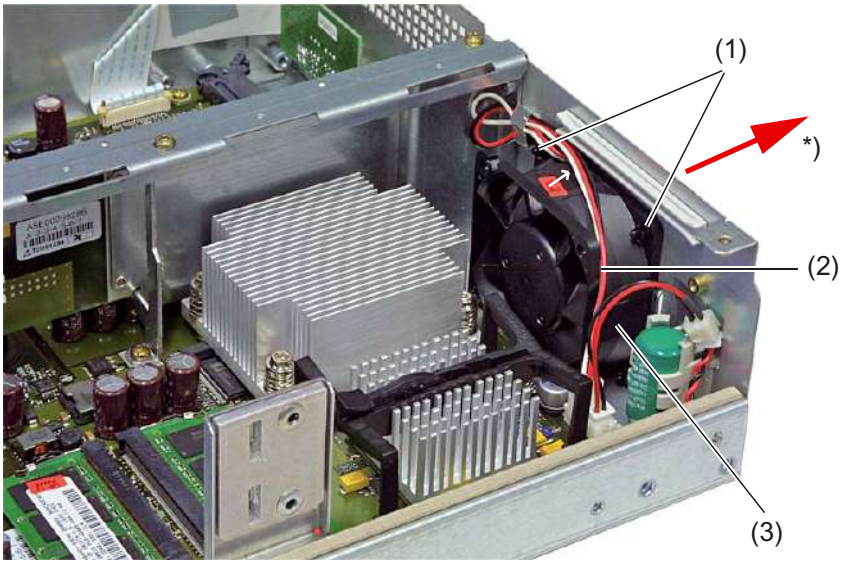

Figure 19-27 Replacement of the PCU 50.3 device fan

(1) Expansion rivets for mounting the device fan
(2) Power supply cable for device fan
(3) Device fan (blows outward)
*) Direction of air flow

1. Disconnect the PC from the power supply.
2. Remove the casing cover by loosening the two screws
   (see diagram "Plan view of PCU 50.3" in section: "Description")
3. Pull the device fan's power supply cable out of the socket.
4. Loosen the four black plastic rivets on the rear of the casing.
5. Take the fan out of the casing.

Installing the device fan

Re-install the new fan in reverse order.
Ensure the correct mounting position is used (see arrow in diagram above).

NOTICE
Only a fan of the same type may be mounted.

19.8.2.5 Battery

Note

Batteries are wear-susceptible parts. They should be replaced every 5 years to ensure that the device functions permanently.

If a mounted PCI plug-in card is also supplied (central battery concept), preventive replacement intervals are shortened to 4 years.

The backup battery supplies voltage to not only to any plug-in cards used during operations but also to the hardware clock once the device has been switched off. In addition to the clock time, the BIOS settings of the device are also stored.
This data is lost if the backup battery fails for longer than 1 minute or remains separate from the plug-in contact while the PCU is not switched on.

⚠ WARNING

Only use 3.0 V lithium batteries for the PCU 50.3 because any plug-in cards present must not be subjected to any permanent voltage in excess of 3.0 V.

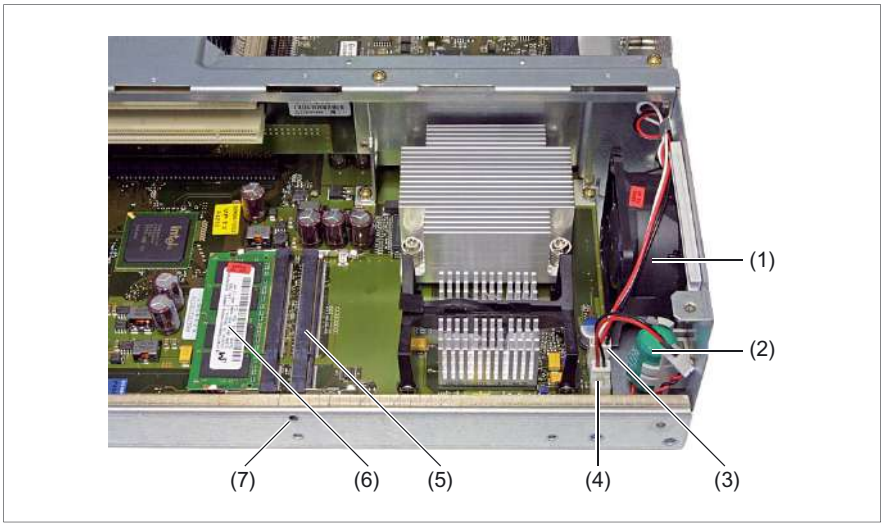

Figure 19-28 Main board of PCU 50.3 with assignment of RAMs and the backup battery

(1) Equipment fan
(2) Backup battery
(3) Plug for connecting device fan
(4) Plug for connecting backup battery
(5) Socket for RAM bank 1 (not assigned)
(6) RAM bank 0
(7) Locating hole for board retainer

Note before replacing the battery

CAUTION
Risk of damage! The lithium battery may only be replaced with an identical battery or with a type recommended by the manufacturer (Order No.: A5E00331143). All lithium batteries should be returned to the battery manufacturer / recycler for disposal or treated as special grade waste.

Note the current BIOS Setup settings. This must be done in particular if you have undertaken different settings which are not saved in the user profile.
If you have saved all settings in the user profile or if you are working with the standard settings, the settings will not be lost when the battery is replaced.

⚠ WARNING
Risk of explosion and release of harmful substances! Therefore, do not throw Lithium batteries into an open fire, do not solder or open the cell body, do not short-circuit or reverse polarity, do not heat up above 100 °C, dispose as regulated and protected against direct exposure to sunlight, humidity and condensation.

Changing the backup battery

You will find the reference diagrams after this description.

Note

If you reconnect the new battery within one minute, all the settings (including time / date) and backed up data will be retained.

1. Open the battery box **(A)**.
2. Take out the battery holder **(B)**.
3. Remove the connection cable **(C)**.
4. Remove the old battery from the holder.
5. Secure the new battery in the holder.
6. Reconnect the connection cable.
7. Close the battery box.

Reference diagrams

(A)

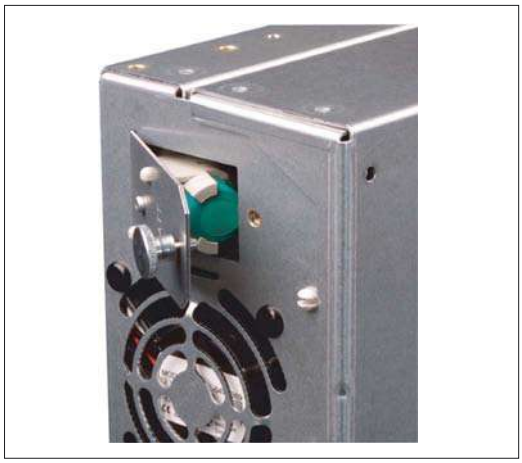

Figure 19-29 Opening the battery compartment

(B)



Figure 19-30 Removing the battery holder

(C)



Figure 19-31 Unplugging the cable

19.9 Accessories

19.9.1 Overview

The following accessories are available for the PCU 50.3:

Component			Order no.
Mounting bracket	Standard [1]		6FC5248-0AF20-2AA0
	Flat [2]		6FC5248-0AF20-0AA0
	Upright [2]		6FC5248-0AF20-1AA0
	Upright (only PCU)		6ES7648-1AA10-0YA0
	Central [3]		6FC5248-0AF20-3AA0
Memory expansion	128 MB, DDR2 533, SODIMM		6ES7648-2AG10-0GA0
	256 MB, DDR2 533, SODIMM		6ES7648-2AG20-0GA0
	512 MB. DDR2 533, SODIMM		6ES7648-2AG30-0GA0
	1024 MB, DDR2 533, SODIMM		6ES7648-2AG40-0GA0
Compact Flash card	512 MB (empty)		6FC5313-4AG00-0AA0
SINUMERIK service pack Recovery Media WIN XP ProEmbSys	for PCU with Windows XP ProEmbSys on CD		6FC5253-8CX10-1XU8
	CD1:	Windows XP ProEmbSys incl. SP2	
	CD2:	Ghost of basic software; emergency boot	
	CD3 to CD5:	Multilingual user interface pack (Chinese simplified, Chinese traditional, Danish, German. Finnish, French, Italian, Japanese, Korean, Dutch, Polish, Portuguese/Brazilian, Russian, Swedish, Czech, Turkish, Hungarian)	
	Documentation (German / English)		
PCI Multi I/O module	2 x COM, LPT for PCU 50.3 (only for use with applications within the framework of HMI Open Architecture, occupies 1 to 2 PCI expansion slots)		6ES7648-2CA00-0AA0

1) for PCU or video link receiver behind operator panel front
2) for PCU and video link receiver in switch cabinet (see section: "Distributed installation")
3) for PCU and video link transmitter behind operator panel front (see section: "Distributed installation")

19.9.2 Installing and removing expansion modules

19.9.2.1 Memory expansion

Expansion options

On the main board there are two slots for memory modules (RAM banks).

If you fill these slots with one or two modules, you can increase the memory capacity of the PCU to up to 2 GB.

184-pin DDR2 memory modules, unbuffered, no ECC can be used.

The following combinations are possible:

Combination	Slot X1	Slot X2	Removal max.
1	128/256/512/1024 MB		1 GB
2	128/256/512/1024 MB	128/256/512/1024 MB	2 GB

Note

It does not matter which modules are inserted into which slots.

Installation of memory module

1. Disconnect the device from mains.
2. Remove the screws from the casing cover (see diagram "Plan view of PCU 50.3" in section: "Description") and take off the casing cover.
3. Insert module in socket (see "Main board of PCU 50.3 with assignment of RAMs and the backup battery" diagram in section: "Spare parts" → "Replacement" → "Battery"). When doing so, pay attention to the recess (anti-rotation element) on the plug side of the RAM module.
4. Press the module downwards, applying slight pressure until the locking snaps into place.
5. Re-install the casing cover.

CAUTION

Insert the module well into the socket so that it cannot fall out or become damaged.

The electrostatic components on the PCBS are highly sensitive to electrostatic discharge. It is therefore vital to take precautionary measures when handling these components. Refer to the directives for handling components that are sensitive to electrostatic charge.

The installed memory module is detected automatically by the PCU.
When the device is switched on, the division into "Base-Memory" and "Extended-Memory" is shown.

Removal of memory module

1. Disconnect the device from main power and unplug all cables.
2. Loosen the casing cover screws (see Figure: "Plan view of PCU 50.3" in section: "Description") and take off the casing cover.
3. Loosen locks on left and right sides of memory module (see Fig.).
4. Pull the memory module out of the slot.

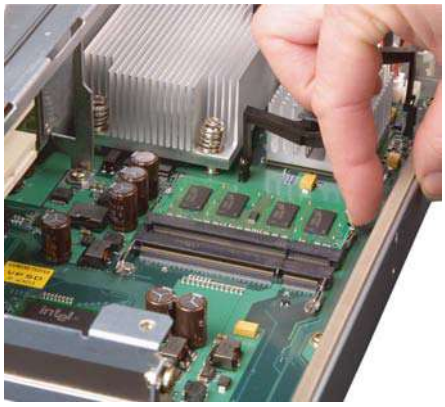

Figure 19-32 Unplug locks

19.9.2.2 PCI cards

The PCU 50.3 is designed for use with modules conforming to PCI specifications V 2.2.
It has two PCI slots (1) for expansion modules.

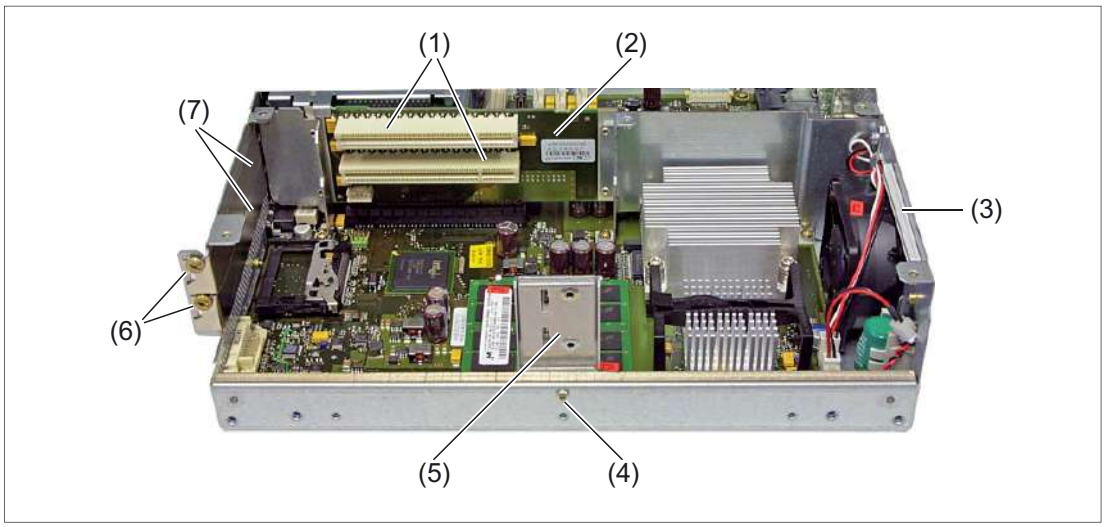

Figure 19-33 Expansion slots

(1) PCI slots for expansion modules
(2) Bus board
(3) Rear guide rail
(4) Retaining screw for module bracket
(5) Module retainer
(6) Retaining screws for slot cover plates and/or external module connections
(7) Cover plates for slots

PCI modules with 5 V and 3.3 V supply voltage can be used.

The dimensions of the boards must not exceed the specified dimensions. Otherwise, contact problems, malfunctions and installation difficulty cannot be ruled out.

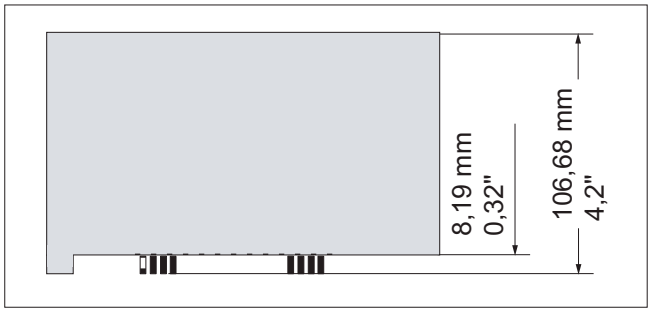

Figure 19-34 Typical PCI module (with a length between 170 - 175 mm)

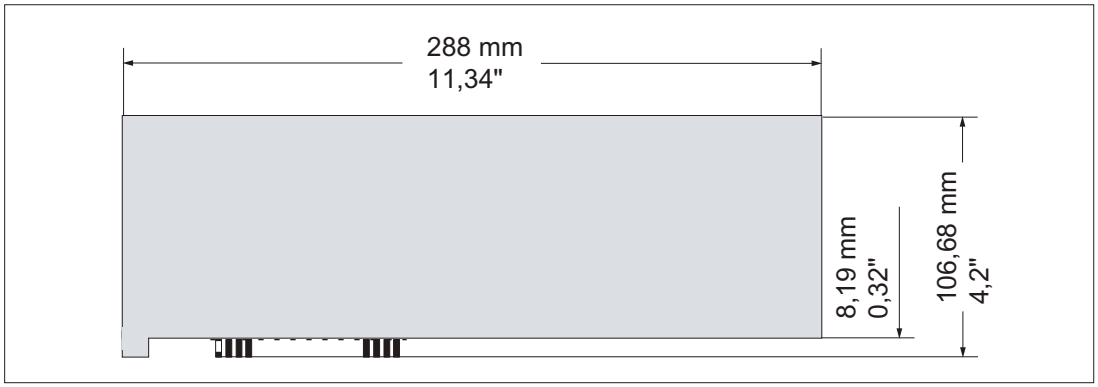

Figure 19-35 Maximum size of PCI module (only possible on slot 1)

Installing PCI expansion modules

NOTICE
When installing PCI modules, ensure that you do not touch or smudge the golden plug connections of the module. This protects the module from malfunctioning.

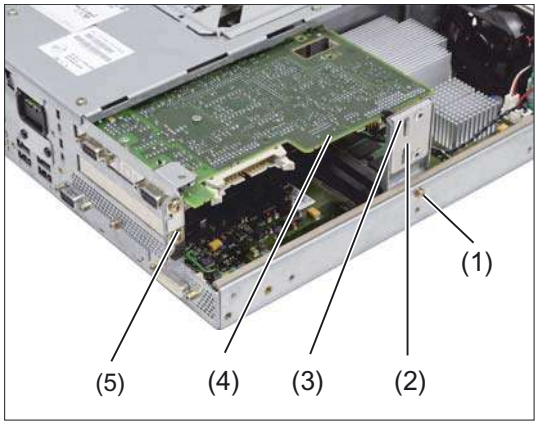

Figure 19-36 Installation of an expansion module

(1) Retaining screw for module bracket
(2) Module retainer
(3) Slider
(4) PCI module (in slot 1 with short shape)
(5) Retaining screw for the slot-steel sheet cover

1. Separate the PCU 50.3 from the main power by disconnecting the main power connector.
2. Loosen the casing cover screws (see Figure: "Plan view of PCU 50.3" in section: "Description") and take off the casing cover.

3. Remove the fastening screw of the module bracket (2) and remove the bracket (3).
4. Undo the retaining screws of the slot cover plate (6) for the corresponding upper or lower slot and remove the slot plate.
5. Carefully insert the PCI module (4); firm seat should be ensured. When using long PCI modules, be aware of the rear guide rail.
6. Install the module bracket (2).
7. Lock the PCI module (4) by inserting a slider (in the separate package) through guide slot until it securely holds the edge of the module in its groove.

CAUTION
No pressure should be applied to the module. Therefore, do not apply excessive force to the slider when you push it onto the module.

8. Use a diagonal cutter to cut off the excess part of the slider (3).
9. Mount the casing cover.

For half-height PCI modules, the following points do not apply: 7. and 8.

Note

If you use the modules with a battery connection, connect the connecting cable to the battery before you install the housing cover (point 9) (see Section: "Installing battery cable")

PCI Multi I/O module

If you use the PCI module Multi I/O (order no.: 6ES7648-2CA00-0AA0), install the driver from the accompanying driver CD per the instructions.
To ensure the module works properly, it is necessary to make a change in the BIOS setup. Make settings in the menu:
Advanced → I/O Device Configuration → Internal COM 1: Disabled

Installing battery cable

- only for MC-specific PCI modules

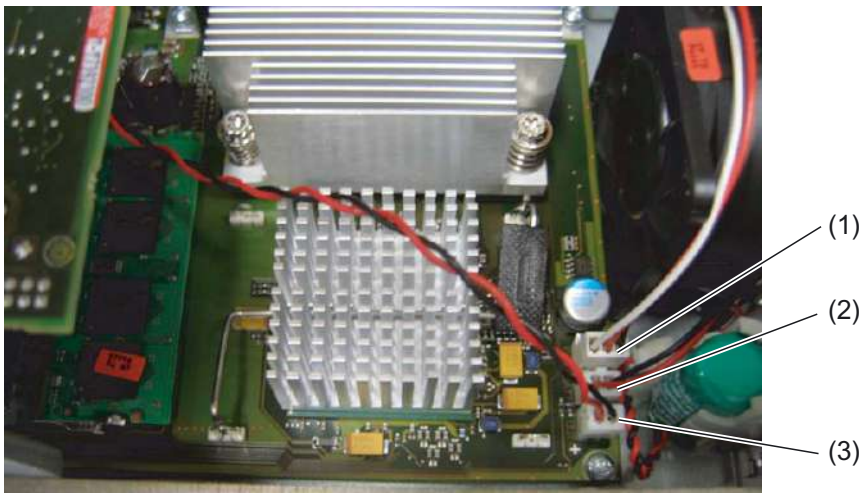

Figure 19-37 Installing the battery cable for PCI modules

(1) Plug for connecting device fan
(2) Plug for connecting backup battery
(3) Connector plug for connecting the PCI module to the battery

- Connect the PCI module via the cable (3) to the battery connection (see figure)

19.9.2.3 CompactFlash card

The PCU 50.3 has a slot for CompactFlash cards (types I/II).

We recommend using CF cards for industrial applications (e.g. industrial grade types produced by SANDISK) because they offer special data security, service life and data transfer speeds.

NOTICE
The slot for the CF card is not capable of acting as a hot-plug. You should therefore fit the CompactFlash card before you switch on the PCU and only remove the card once you have switched the PCU off.

Installing the CF card

1. Separate the PCU from the power supply by disconnecting the main power connector.
2. Loosen the fastening screw (4) for the cover plate (3) of the card slot.
3. Fold up the cover plate (3) and slide it towards the DVI-I interface (2). Lift the cover plate slightly until it unlatches on the left side. Then slide it back until it unlatches on the right side.
4. Carefully slide the CF card straight into the card slot until it snaps in.
5. Close the card slot by inserting the cover plate and lock it on the left and right.

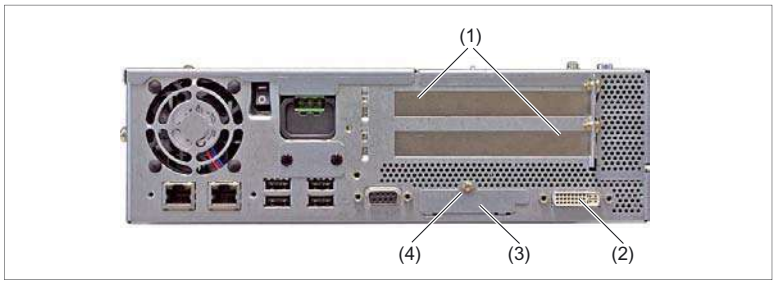

Figure 19-38 Installing CF card

(1) Cover plates for PCI slots
(2) DVI-I interface
(3) Cover plate for PC card slot
(4) Retaining screw for cover plate

Note

The slot for the CompactFlash card is coded to prevent incorrect plugging of the card.
If the CF card is incorrectly plugged, it protrudes out of the housing approx. 1 cm and remains functionless.

Removing the CF card

1. Open card slot as described under "Installing the CF card" (point 1-3).
2. Press the eject button on the right-hand side of the module slot (e.g. with narrow end of the cover plate - see Fig.).
3. Remove the CF card.
4. Close the card slot.

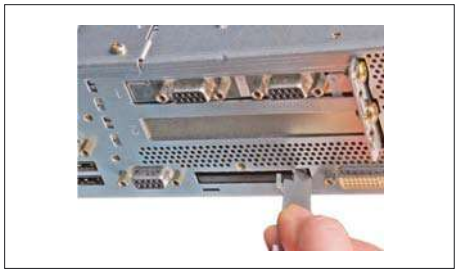

Figure 19-39 Press the eject button

PCU 70

20

20.1 Description

Note

The component PCU 70 is based on the PCU 50. For this reason, reference is frequently made to the PCU 50 in the following technical description. The main difference is the increased number of PCI slots and the resulting increase in the overall depth of the device.

The SINUMERIK component PCU 70 can be installed in two different ways:

- Centrally (on the rear panel of a SINUMERIK operator panel front: see relevant operator panel front chapter)
- distributed (in a switch cabinet; see Section: "Distributed configuration")

Validity

The description applies to the following devices:

Processor	Operating system	RAM	Screen resolution max.	Order No.:
Pentium III, 500 MHz	NT 4.0	126 MB	1024 x 768 pixels (XGA)	6FC5210-0DF04–0AA0
Celeron 1.2 GHz	NT 4.0	256 MB	1600 x 1200 pixels	6FC5210-0DF24–0AA0
Celeron 1.2 GHz	XP	256 MB	1600 x 1200 pixels	6FC5210-0DF24–2AA0

Features

- Robust and easy-to-service design (continuous operation, high noise immunity)
- Compact construction for space-saving installation
- User memory (RAM), max. 512 MB
- Hard disk, min. 10.4 GB (interchangeable)
- Power supply: 24 VDC

- Interfaces:
  - Parallel interface LPT1 / 2 serial interfaces V.24
  - PS/2 keyboard interface /PS/2 mouse interface
  - MPI/DP (max. 12 Mbaud)
  - VGA interface for additional monitor
  - Ethernet connection 10/100 Mbaud
  - 4 slots: 3 x PCI and 1 x shared PCI/ISA
  - PC card slot
  - USB interface (for Windows NT: for standard PC keyboard and mouse) – for PCU (1.2 GHz): Two USB interfaces
  - 2 interfaces to the operator panel front or videolink transmitter: LVDS interface/IO interface

View

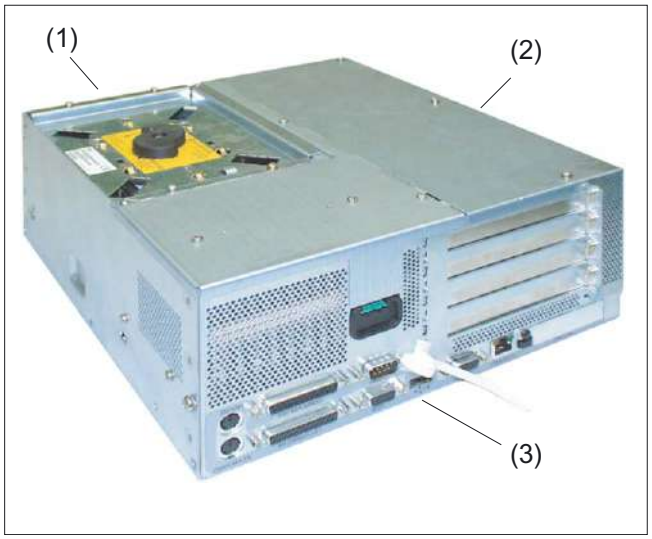

Figure 20-1 Perspective view of PCU 70 (1.2 GHz version)

(1) Left
(2) top
(3) Right

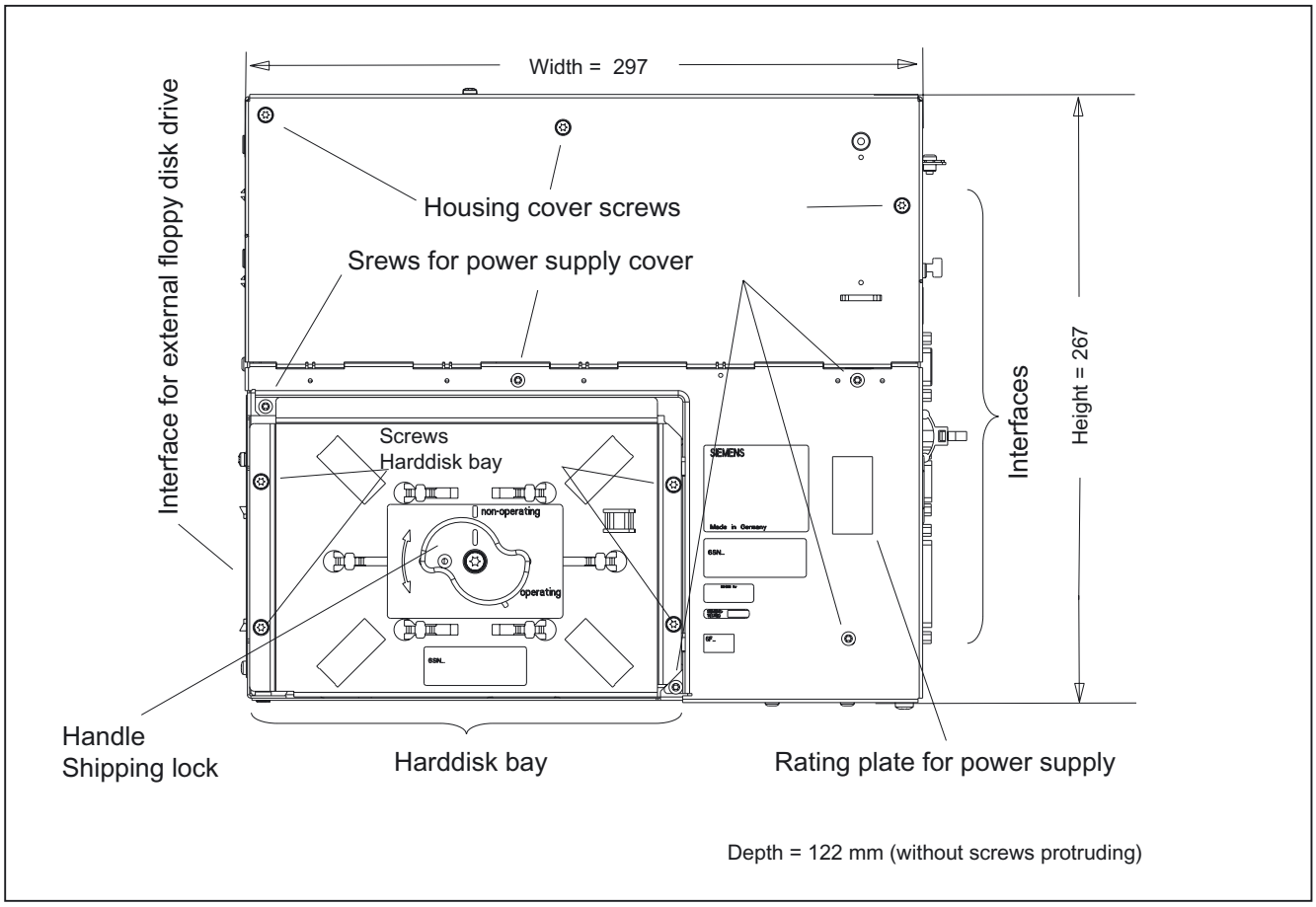

Figure 20-2 Top view of PCU 70 (1.2 GHz version)

20.2 Interfaces

20.2.1 Right-hand casing side

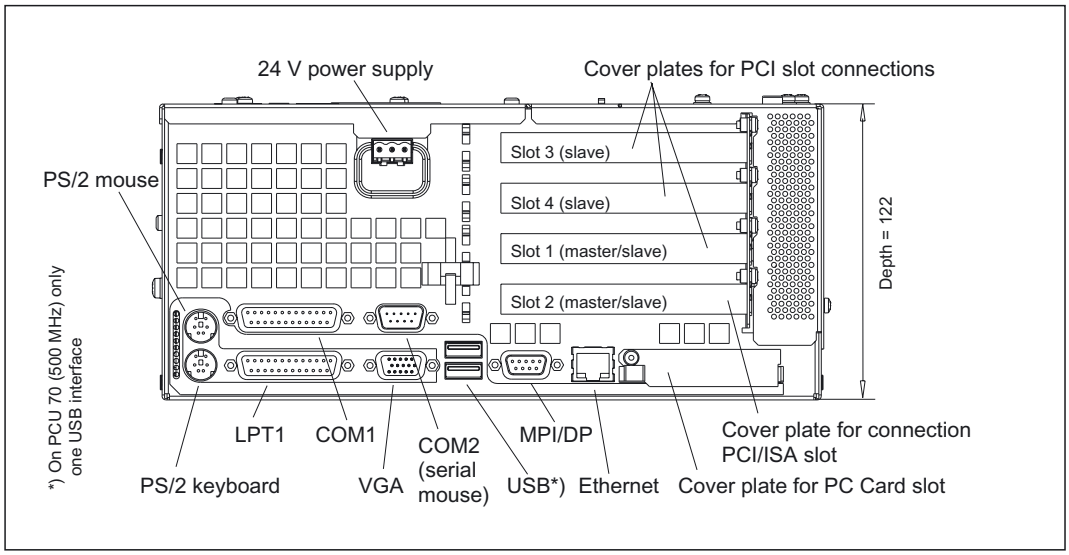

Figure 20-3 Side view of PCU 70 (1.2 GHz) from right with interfaces

Connection		Function
LPT1/Printer		Parallel interface (e.g. printer), 25-pole sub D socket connector
COM1/RS-232		Serial interface 1 (V24), 25-pole sub D socket connector
COM2		Serial interface 2 (RS-232), 9-pole male Sub-D connector
Keyboard		PS/2 trackball to keyboard connection
Mouse		PS/2 mouse connector
USB	PCU (500 MHz)	an ext. USB port (can be used only for standard PC keyboard or mouse)
	PCU (1.2 GHz)	Two external USB connections
MPI/DP (RS-485)		Multi-Point Interface/Profibus DP connection; connection of an S7 automation unit, 9-pole sub D socket connector
VGA		VGA interface for external monitor, 15-pole sub D connector
Ethernet		Connection for local area network (LAN)
PC card slot		Slot for ATA flash card/memory card or 100/200 Type I/II flash card
PCI slot		3 slots for expansion modules[1)]
PCI/ISA slot		Slot for expansion board [1)]
Power supply		24 V DC

[1)]If expansion modules are plugged in, the cover plates (diagram above) are replaced by the front plates of the respective module. See description of the relevant board.

Note

The MCI board of the SINUMERIK 840Di should be fitted in Slot 1 only.

20.2.2 Left-hand casing side

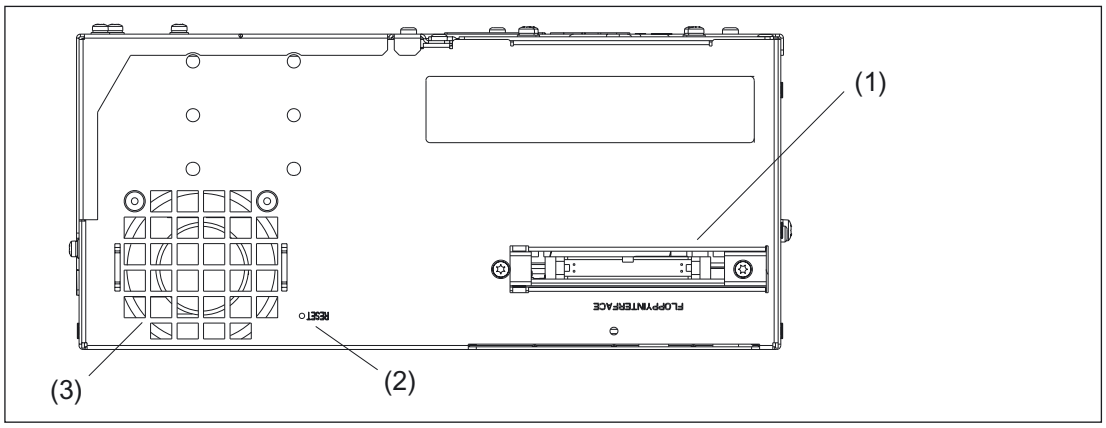

Figure 20-4 Side view of PCU 70 from left (1.2 GHz)

(1) Connection for external floppy disk drive (34-pin plug connector)
(2) Reset pushbutton
(3) Device fan

An external floppy disk drive can be connected via the connection (1) shown in the figure (see Section: "Accessories" → "External floppy disk drive").

Note

Pressing the Reset button will cause a hardware reset. The PC performs a restart (cold start).

20.2.3 Casing rear side

The two interfaces for connecting an operator panel front or, in a distributed configuration, a videolink transmitter are behind a rectangular cutout in the rear side of the casing:

- the IO interface for connecting the IO cable and
- LVDS interface for connecting a TFT display.

Procedure for mounting, see Section: "Mounting".

20.2.4 Pin assignment of the interfaces

For the pin assignments of the individual interfaces, refer to Chapter: "Connection Conditions", section: "Secondary electrical conditions".

20.3 Mounting

Mounting

A special set of mounting brackets is required for each mounting method. These are not supplied with the PCU 70 and must be ordered separately (see Section: "Accessories").

Two methods can be used to mount the PCU 70:

1. Central installation when PCU is mounted on the operator panel front. Mounting instructions, see corresponding Section of the operator panel front, Section: "Mounting"
2. Flat installation for distributed configuration of PCU + videolink transmitter. In this case, the PCU can be installed at a distance of up to 20 m from the operator panel front, (e.g. in a control cabinet).

   Mounting instructions, see Chapter: "Distributed configuration", Section: "Mounting PCU with videolink transmitter".

NOTICE
When attaching the mounting brackets, make sure that they are positioned correctly (the brackets are not symmetrical). The hinged catches must point towards the fan end.

Notes on installation

Please note the following during installation:

- As far as possible, extreme environmental conditions should be avoided. Protect the PCU against severe vibration / shocks, dust, humidity, direct sunlight and heat.
- An external fire protection casing is required.
- Install the device in such a way that no danger (e.g. by falling down) may result.
- Ventilation clearances:
  - Fan side: 100 mm
  - Remaining sides: 10 mm
- Do not cover the vent slots.

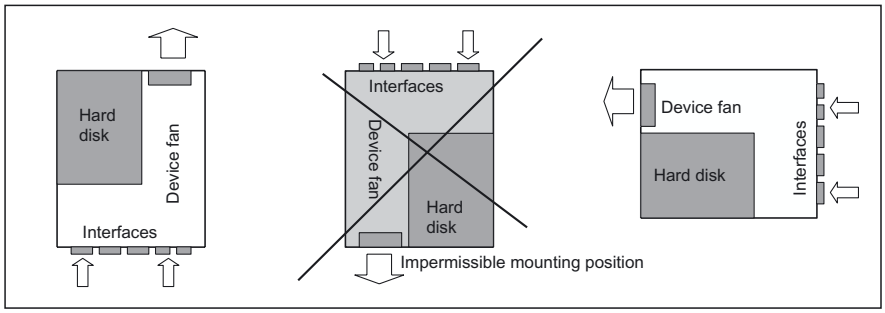

Figure 20-5 Preferred mounting positions of PCU 70

Inclined position: Deviations of ± 5° in comparison to the installation positions shown in the figure are permitted.

20.4 Connectors

20.4.1 Ground terminal

The ground terminal **(1)** of the PCU 70 is on the underside of the casing.

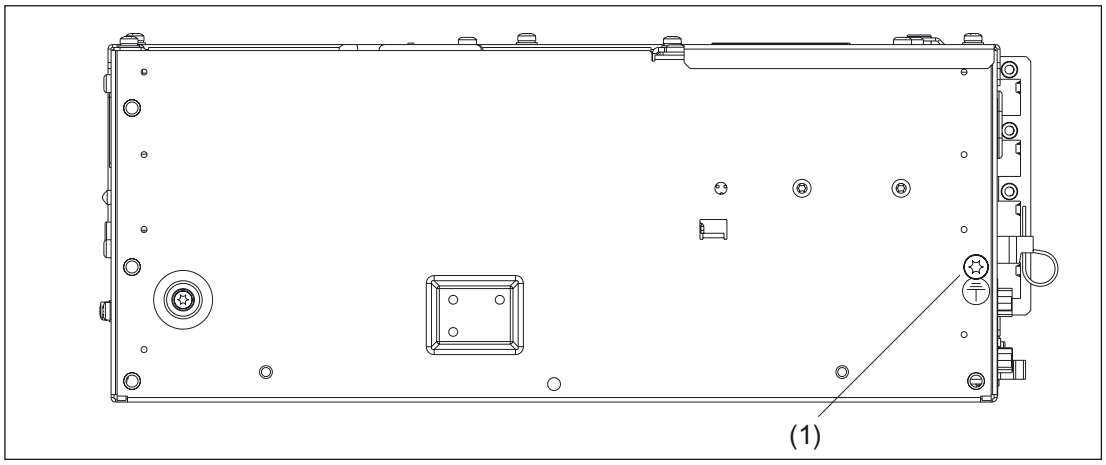

Figure 20-6 Bottom side of PCU 70 (1.2 GHz) with ground connection

20.4.2 I/O devices

CAUTION
In a distributed configuration, the display type must be set on the videolink transmitter **before** the system is first switched on as it is not automatically detected (see Section "Distributed configuration", Section: "Control and display elements") If the setting is incorrect, the display could sustain damage within a few seconds.

Before you connect the PCU to a power supply, you must release the hard disk and connect the I/O devices (operator panel front, keyboard, mouse, ...) .

Procedure

1. Insert the connecting cables for the I/O devices into the corresponding sockets on the interface side of the PCU 70 (see Section: "Interfaces" → "Right side of housing").
2. Once the peripherals have been connected, the device is ready.

Information about how to adjust and set your interface and the required connecting lead can be found in the Operator Guide that goes with the peripheral.

Note

When connecting I/O devices, please make sure that the components are designed for use in industry.

CAUTION

When plugging in / unplugging I/O connections (keyboard, mouse, printer, etc.), make sure that the I/O devices and the PCU are disconnected from the power supply. Otherwise, they can become damaged.

This does not apply to USB connections.

20.4.3 Power Supply

The PCU 50 is supplied with 24 V direct voltage.

⚠ CAUTION

The device should only be connected to a 24V DC power supply which satisfies the requirements of safe extra low voltage (SELV).

The cable cross-section must be large enough to ensure that no damage can be caused by the cables if there is a short-circuit at the PCU.

Switching on and switching off

A main power switch is not provided which means that the device must be switched on and off at the external power supply.

20.5 Commissioning

Information on the power-up, read-out or changing of BIOS settings, the boot manager and the use of PC cards can be found in Section: "PCU 50", section: "Commissioning".

20.6 Technical specifications

Security				
Safety class		III; PELV acc. to EN 50178		
Degree of protection per EN 60529		IP20		
Approvals		CE, cULus		
Electrical specifications				
Input voltage		DC 24 V		
Max. power consumption		PCI / ISA slot		Total
	5 V	2 A		3 A
	12 V	0.3 A		0.6 A
	-12 V	0.1 A		0.15 A
Power consumption		Typ. 40 W	Max. 140 W	
Power outage overriding time		20 ms		
Mechanical data				
Dimensions (mm)		Width: 297	Height: 267	Depth: 122
Weight		Approx. 6.5 kg		
Mechanical ambient conditions (with OP 012)		**Operation**	**Transport** (in transport packaging)	
Vibratory load		10 -58 Hz: 0.075 mm 58 -200 Hz: 9.8 m/s^2 3M4 per EN 60721-3-3	5 -9 Hz: 3.5 mm 9 -200 Hz: 9.8 m/s^2 2M2 per EN 60721-3-2	
Shock stressing		50 m/s^2, 30 ms, 18 shocks 3M2 per EN 60721-3-3	300 m/s^2, 6 ms, 18 shocks 2M2 to EN 60721-3-2	
Noise		< 55 dB(A) to DIN 45635		
Climatic ambient conditions				
Cooling		Open circuit ventilation		
Condensation, spraying water and icing		Not permitted		
Supply air		Without caustic gases, dusts and oils		
		Operation	**Storage/shipping** (in transport packaging)	
Applicable standards		EN 60721-3-3	EN 60721-3-1 / -3-2	
Climate class		3K5	1K3 / 2K4	
Temperature limits		15 W [1] 5 ... 55 ºC 20 W [1] 5 ... 50 ºC 30 W [1] 5 ... 45 ºC	-20 ... 60ºC	
Temperature change		Max. 10 K/h	Max. 18 K/h	
Limits for relative humidity		10 ... 80%	5 ... 95%	
Permissible change in the relative air humidity		max. 0.1 % /min		

[1] max. output expansions (PCI/ISA slots, PC card, USB interface

20.7 Replacement parts

Overview

Component		Order No.:
Hard disk with mounting plate and damper		6FC5247–0AF08–0AA1
Device fan		A5E00019079
Backup battery 3.6 V		W79084–E1003–B1
24 V DC power supply	500 MHz (85 W)	A5E00117073
	1.2 GHz (105 W)	A5E00188815

replacement

Description of spare parts replacement (see Chapter: "PCU", Section: "Spare parts" → "Replacement".

20.8 Accessories

20.8.1 Overview

The following accessories are available for the PCU 70:

Component		Order No.:	
3.5" floppy disk drive, external		6FC5 235–0AA05–0AA1	
3.5" floppy disk drive, USB		6FC5 235–0AA05–1AA1	
Memory expansion (SDRAM PC 100) 3)		PCU 70 (500 MHz)	PCU 70 (1.2 GHz)
	128 MB	6ES7791–0KS00–0XA0	6ES7648–2AC10–0CA0
	256 MB	6ES7791–0KT00–0XA0	6ES7648–2AC20–0CA0
Expansion modules		(according to AT/PCI specification)	
Mounting bracket	Standard 1)	6FC5248–0AF20–2AA0	
	Flat 2)	6FC5248–0AF20–0AA0	

1) for PCU + operator panel front assembly

2) for distributed installation of PCU + videolink transmitter

3) see figures in Chapter: "PCU 50", section: "Spare parts" → "Replacement" → "Battery"

20.8.2 Description of components

20.8.2.1 External floppy disk drive

The figure shows the external floppy disk drive, which can be plugged in at the drive connection on the left side of the housing (see Section: "Interfaces"). Information on this can be found in Chapter: "3.5" Floppy Disk Drive".

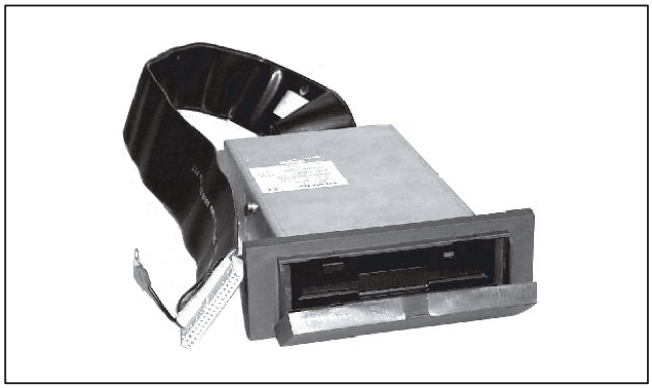

Figure 20-7 External floppy disk drive

20.8.2.2 Memory expansion

There are two slots on the motherboard (see figures in Chapter: “PCU 50”, Section: "Spare parts" → "Replacement" → “Battery”) available for 144-pin SO-DIMM memory modules. You can use these modules to expand the user memory of the PCU by up to 512 MB.

Standard memory

The basic configuration is a 128/256 MB SDRAM module.

Memory (MB)	128 MB module	256 MB module
128	1	–
256	2	–
256	–	1
384	1	1
512	–	2

You can find information on the assembly and system start-up in Chapter: "PCU 50", section: "Accessories" → "Description of the Components" → "Memory Expansion".

20.8.2.3 Expansion boards

You can find information on the expansion modules and mounting in Chapter: "PCU 50", section: "Accessories" → "Description of the Components" → "Expansion modules".

Videolink (VL) 21

21.1 Description

21.1.1 Validity

With "Distributed Installation with Videolink" in SINUMERIK, up to three identical operator panel fronts can be operated at a distance of up to 20 m from the PCU.

This spatial flexibility allows you to install the PCU at less hazardous locations of the system (e.g. control cabinet).

The following description applies to the following components:

Description	Characteristics	Order No.:	
Videolink receiver		6FC5247–0AF22–...	...–0AA0
Videolink transmitter	1 : 1 [1)]		...–1AA0
	1 : 2		...–2AA0
Mounting bracket for videolink receiver	behind the operator panel front (identical to that for PCU)	6FC5248–0AF20–...	...-2AA0
Mounting bracket for the videolink transmitter	Flat for PCU 50/70		...–0AA0
	Upright for PCU 50		...-1AA0
	Central for PCU 50		...-3AA0
Videolink cable	10 m	6FX2002–1VL01–...	...–1BA0 [2)]
	15 m	6FX2002–1VL00–...	...–1BF0 [2)]
	20 m	6FX2002–1VL00–...	...–1CA0 2)

[1)] see "View" in this Section

[2)] ...-1XX0 is the length code: A = 0, B = 1, etc.

21.1.2 Overview

Features

- Used in
  - Slimline operator consoles with any orientation
  - Closed fan-free operator consoles
- Rugged thanks to separate installation of the PCU in protected areas (e.g. control cabinet)
- Simple implementation of a second/third operator panel front with digital screen quality
- Additional USB ports for service and I/O devices (keyboard, mouse, etc.)
- Extensive use of software-neutral technology for all operating systems

Communication

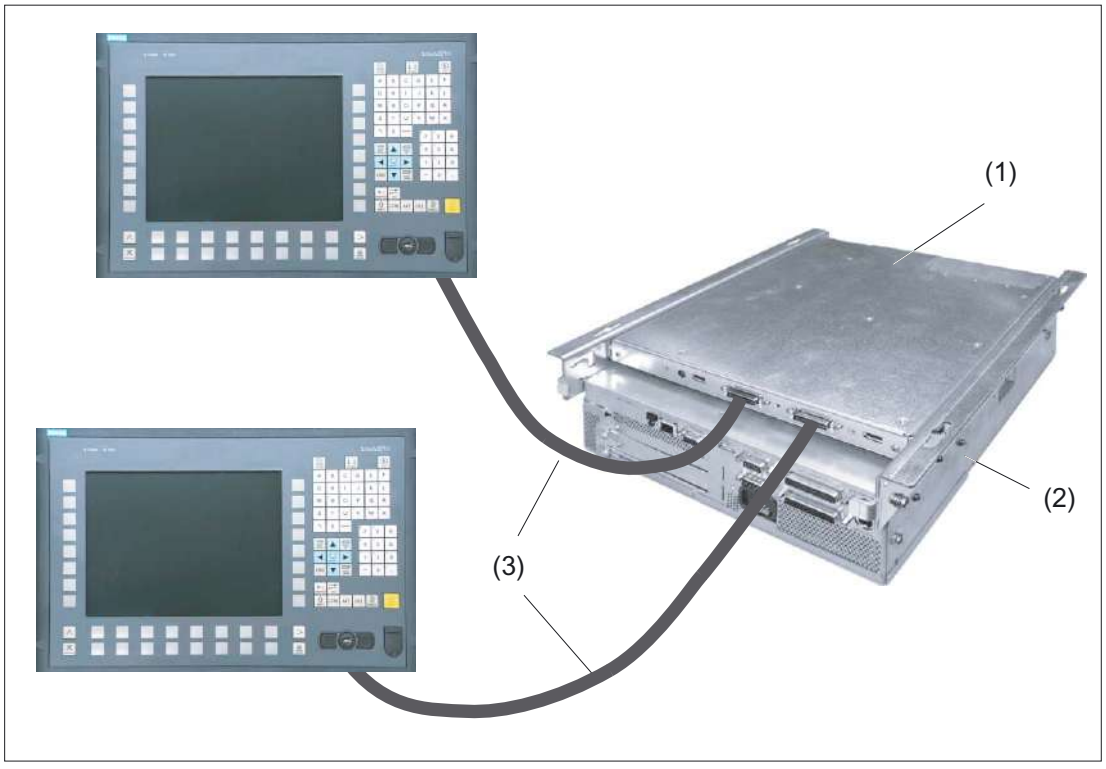

Figure 21-1 View of distributed installation with videolink: Example with two OP 012 operator panel fronts

(1) Videolink transmitter 1 : 2
(2) PCU 50
(3) Videolink cable (≤ 20 m)

The figure shows the components for the distributed configuration with videolink:
The PCU communicates with two operating panel fronts (here OP 012) via

- the videolink transmitters 1:2 mounted on the PCU
- two Videolink cables
- Two videolink receivers (not visible in the figure, because it is mounted behind the operator panel fronts, see Section: "Components" and Section: "Mounting" → "Videolink receiver on operator panel front")

Combinations

Table 21-1 Possible combinations of the various transmitter and receiver types

	Transmitter	6FC5247–0AF20–0AA0	6FC5247–0AF21–0AA0	6FC5247–0AF22–1AA0	6FC5247–0AF22–2AA0
Receiver					
6FC5247–0AF20–1AA0		+	+	-	-
6FC5247–0AF21–1AA0		+	+	-	-
6FC5247–0AF22–0AA0		-	-	+	+

Table 21-2 Maximum permitted number of operator panel fronts which can be combined with a PCU in a distributed installation with videolink

	Number								
	OP 010 as of .._0AA1	OP010S	OP010C	OP 012	TP 012	OP 015	OP015A	15" OPs 416 mm	TP015A
PCU 50	3	2	3	3	3	3	3	2	3
PCU 70	2	2	2	2	2	2	2	2	2

21.1.3 Configurations

The maximum cable length for the videolinks is 20 m.

CAUTION
All of the displays used in a system must have the same resolution since they can be damaged within a few seconds if they are incorrectly set. That is why the "Caution" note in Section: "Control and monitoring elements" → "Videolink transmitter" must be observed!

Configuration with up to two operator panel fronts

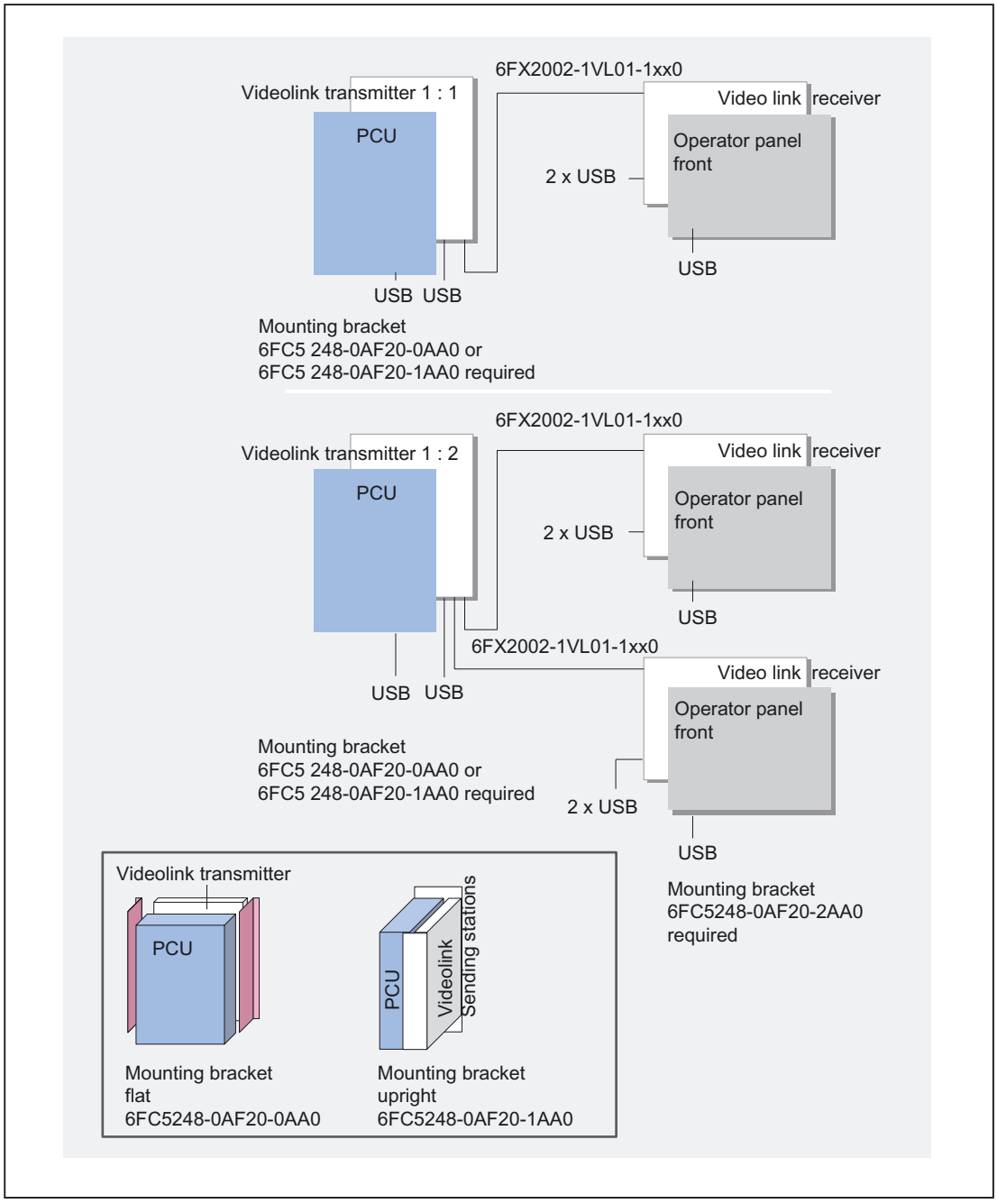

Figure 21-2 Distributed installation with videolink configuration with up to two operator panel fronts

In the figure on the top left and center, the PCU and videolink transmitter components are combined to form a unit. They can be mounted physically separated from the operator panel front, i.e. in a distributed installation (e.g. in a control cabinet).

The two installation options shown bottom left can be used: the "flat mounting" and "upright mounting".

A third installation option (not shown here), "central mounting", is identical to "flat mounting", except an additional operator panel front is directly mounted behind the videolink transmitter (see figure in Section: "Configuration with up to 3 operator panel fronts").

The mounting kits must be ordered separately.

The associated operator panel front and videolink receiver components which are combined to form a unit are shown on the right. They can be mounted in an operator console.

Configuration with up to 3 operator panel fronts

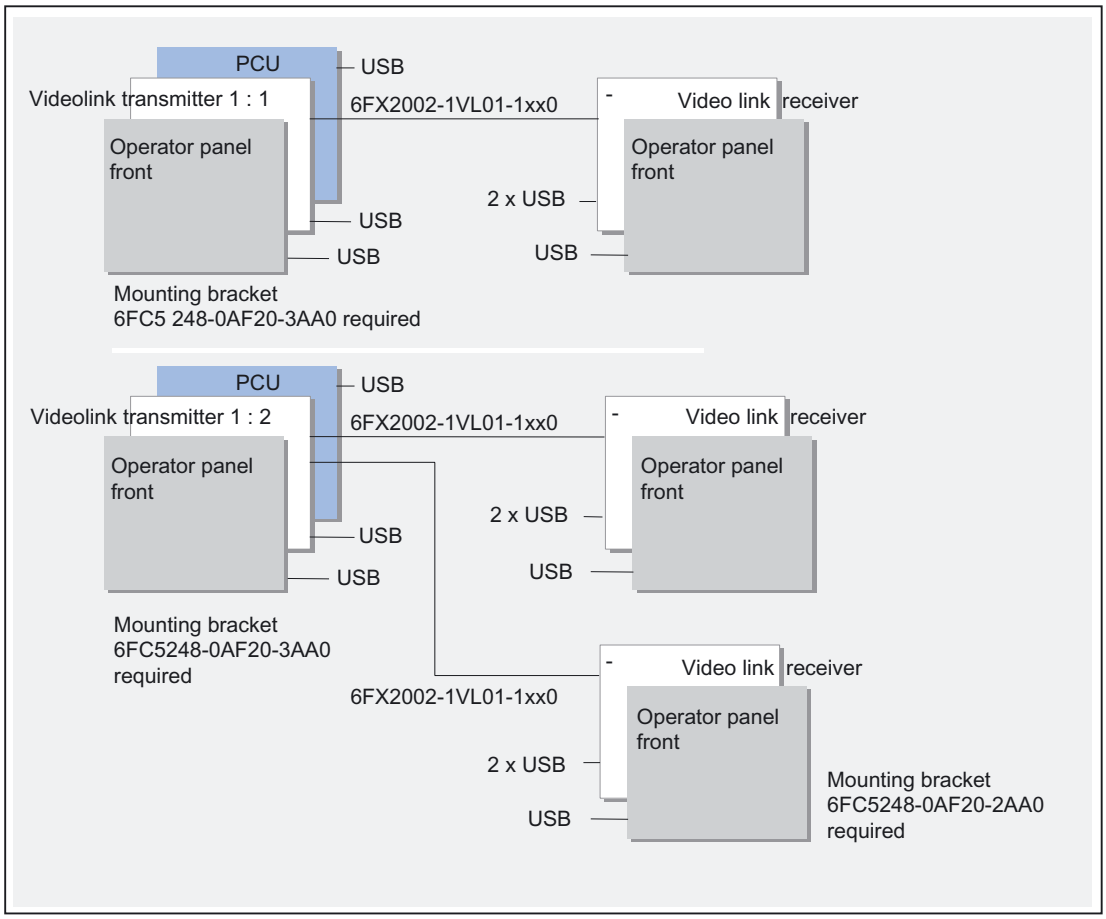

Figure 21-3 Configuration with up to three operator panel fronts on one PCU

The figure shows another possible application of the distributed configuration with videolink: The PCU with the Videolink transmitter is mounted behind an additional (central) operator panel front (not intended for OP 010S). This allows up to three operator panel fronts to be operated at a PCU at the same time.

NOTICE
If a central operator panel front is used, it is important to ensure that DIP switch S2 of the videolink transmitter is set to the correct position (see Section: "Operating and monitoring elements" → "Videolink transmitter"!

21.1.4 Components

21.1.4.1 Overview

SINUMERIK "distributed installation with videolink" comprises a selection of components based on the building block principle - suitable for a wide variety of operator panel fronts:

- Videolink transmitter for mounting on a PCU 50/70
  - 1:1 (with one output) or
  - 1:2 (with two outputs)
- Videolink receiver for mounting on a TFT operator panel front (OP 010 S/C, OP 012, OP 015, OP 015 A, TP 012 or TP 015A)

  Note

  OP 010 is not supported (owing to STN color display)

- Videolink cable in standard lengths 5 m, 10 m, 20 m and 25 m
- Application-specific fixing sets such as
  - flat mounting bracket for PCU with videolink transmitter in control cabinet
  - upright mounting bracket for PCU with videolink transmitter in control cabinet
  - central mounting bracket for PCU with videolink transmitter behind operator panel front (not with OP 010S)
  - standard mounting bracket for mounting the receiver on the operator panel front (not required for OP 010S).

21.1.4.2 Videolink receiver

Configuration

Videolink receiver for mounting to OP 010C, OP 012, OP 015, OP 015A, TP 012 or TP 015A

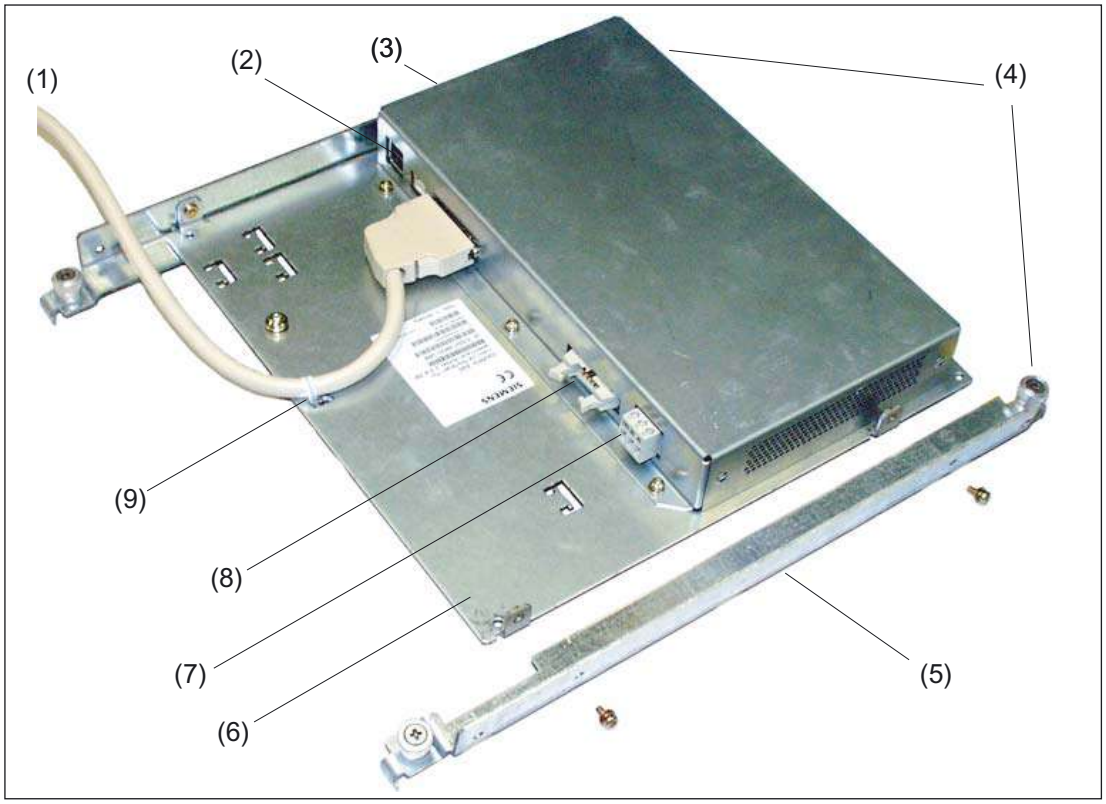

(1) Videolink cable
(2) 2x USB-A
(3) Videolink receiver
(4) Hinged catches (covered) to help attach videolink receiver to operator panel front (see Section) "Mounting" → "Videolink receiver on operator panel front"
(5) Standard mounting bracket (not needed for OP 012S)
(6) Supporting plate
(7) Power Supply
(8) Keyboard interface
(9) Cable ties (see Section: "Mounting" → videolink receiver on operator panel front")

Description

The figure shows the position of the receiver interfaces:

- Inputs:
  - 1 x videolink for 1, ..., 20m (video data plus USB signals)
  - 1 x 24 V DC power supply
- Outputs:
  - 2x USB-A
  - 1 x keyboard interface (for USB keyboard)
  - 1 x LVDS interface (not visible in the figure)
  - 1 x IO/USB interface (not visible in the figure)
  -

21.1.4.3 Videolink transmitter

Configuration

The figure shows a videolink transmitter (mounted on the PCU with the aid of the "flat" mounting bracket, see Section: "Mounting" → "Videolink transmitter on PCU"→ "Flat mounting").

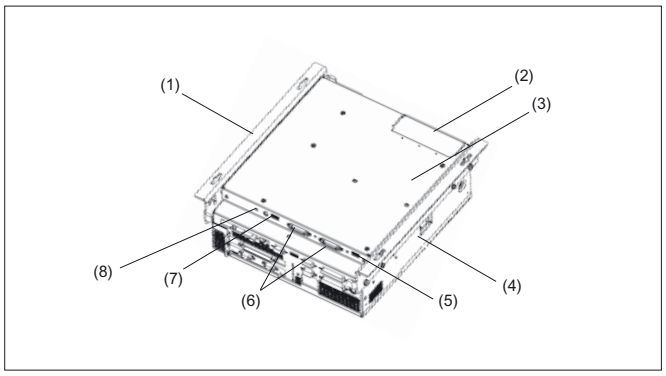

Figure 21-4 PCU with videolink transmitter (1:2 variant) and flat mounting bracket

(1) Mounting bracket (flat)
(2) Cover plate for covering the opening used to connect a central operator panel front
(3) Videolink transmitter
(4) PCU 50
(5) USB-A
(6) Connections for videolink cables
(7) USB-A
(8) Display coding switch S1 (you must observe Section: "Control and monitoring elements" → "Videolink transmitter"!)

Description

The videolink transmitter is mounted on the underside of the PCU between the mounting brackets. It does not require a separate power supply because it is supplied via the interfaces to the PCU.

The videolink transmitter is available in two versions:

1. **Videolink transmitter 1 : 1**
   - Inputs (not visible in figure):
     - 1 x LVDS interface
     - 1 x IO/USB interface
   - Outputs:
     - 1 x videolink for 1, ..., 20m (video data plus USB signals)
     -1 x USB A
     - 1 x LVDS interface (for connecting a centr. operator panel front)
     - 1 x IO/USB interface (for connecting a centr. operator panel front)
2. **Videolink transmitter 1 : 2**
   - Inputs: same as 1.
   - Outputs:
     - 2 x videolink for 1, ..., 20m (video data plus USB signals)
     -2 x USB A
     - 1 x LVDS interface (for connecting a centr. operator panel front)
     - 1 x IO/USB interface (for connecting a centr. operator panel front)

21.1.4.4 Cable

The videolink cable comes in three standard lengths:

- 10 m: Order No. 6FX2002-1VL01-1BA0
- 15 m: Order no. 6FX2002-1VL00-1BF0
- 20 m: Order no. 6FX2002-1VL00-1CA0

Other lengths require special preparation and have longer delivery times.

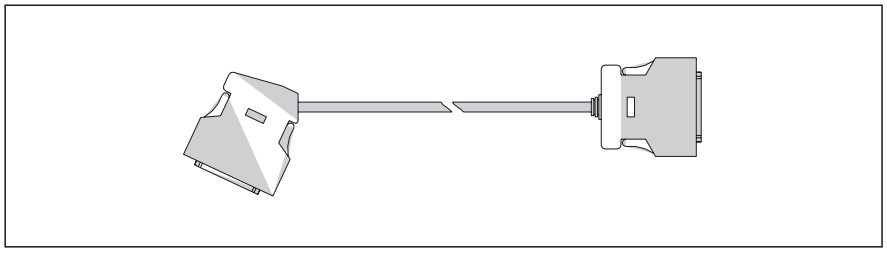

Figure 21-5 Videolink cable

The housing can be removed on angular connectors. This reduces the outer dimensions and allows the connector to be introduced into conduits with 35 mm diameter or greater. The minimum diameter for permanently mounted connectors is 42 mm.

Note

These high-quality cables should not be shortened or lengthened.

For technical reasons, the length is limited to max. of 20 m.

21.2 Control and monitoring elements

21.2.1 Videolink transmitter

Display coding switch S1

The display coding switch S1 is a rotary switch for selecting the display type.

- Position 0: Display switched off (delivered status)
- Position 8: 12" TFT SVGA 800 x 600 pixels
- Position 9: 15" TFT XGA 1024 x 768 pixels
- Position B: 10" TFT VGA 640 x 480 pixels

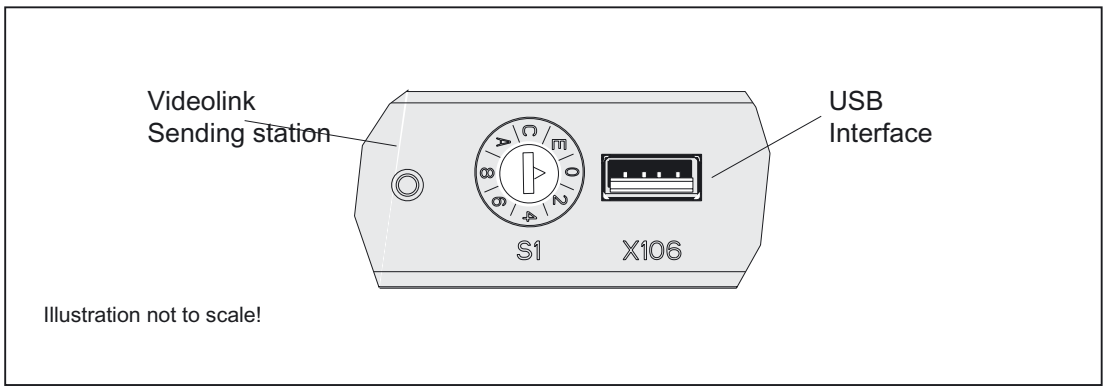

Figure 21-6 Display coding switch S1 for setting the display type
The values 1, 3, ..., F are displayed as dashes due to lack of space.

Note

On delivery, S1 is set to "0".

Before starting operation, S1 must be set to the display type being used as described in the list above.

The selected switch setting only becomes effective when the PCU is switched on (again).

All displays used in a system must have the same resolution.

CAUTION
If the setting is incorrect, the displays could be damaged within a few seconds.

DIP switch S2

With the 1:2 configuration, the USB signal must be switched to the selected interfaces (X106 or X108) using S2. The default setting is activation of the internal interface X108. Interface X106 can only be used for flat and upright mounting.

Table 21-3 Function of selector S2

Function	Switch setting
USB signal X106 (X108 without function, 2nd USB port active)	1/1
USB signal X108 (X106 without function, central operator panel front active)	2/2 (default)

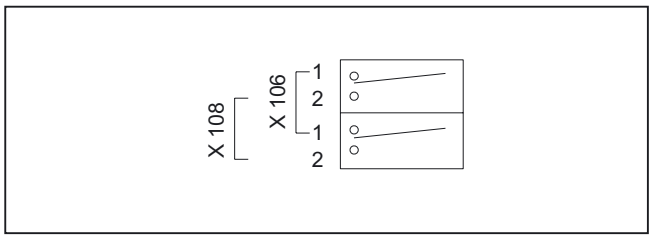

Figure 21-7 DIP switch S2 for control of the USB signal

The default setting of S2 = 2/2 (central operator panel front) is recommended.

NOTICE
For connecting a central operator panel front (see Section: "Description" → "Configurations" to X107/108, the DIP switch S2 must be set to the position "X108" (2/2), otherwise the keyboard, mouse and USB plug of the panel do not function. The second USB interface X106 cannot be used in this case.

21.2.2 Videolink receiver

Temperature monitor

A temperature monitor is integrated in the receiver module. If the threshold 75 ± 5 °C is exceeded, the "TEMP" LED on the operator panel front illuminates. The LED extinguishes again when the 69 ± 5 °C threshold is undershot.

21.2.3 Operator panel interlock

The purpose of the operator panel interlock is to prevent operator inputs being made at different panels simultaneously. The screen display must remain active and is not affected by the interlock.

21.3 Interfaces

21.3.1 Overview

Interfaces				
Type	**Function**	**Desig-nation**	**Input/Output**	**Type**
Videolink transmitter 1:1	- Videolink (incl. USB)	X101	A	Socket connector, 36-pin
	USB interface	X102	A	USB-A
	- LVDS interface	X103	E	Plug connector, 2 x 10-pin
	I/O interface for operator panel from the PC	X104	I/O	Plug connector, 2 x 13-pin
	- LVDS interface to the central operator panel front	X107	A	Plug connector, 2 x 10-pin
	- I/O interface for central operator panel front	X108	I/O	Plug connector, 2 x 13-pin
Videolink transmitter 1:2	such as videolink transmitter 1:1; additional			
	- second Videolink (incl. USB)	X105	A	Socket connector, 36-pin
	USB interface	X106	A	USB-A
Videolink receiver	- Videolink (incl. USB)	X201	E	Socket connector, 36-pin
	USB interface	X203/204	A	2x USB-A
	- Keyboard interface	X205	A	Plug connector, 2 x 5-pin
	- Power supply	X206	E	Terminal block, 3-pin
	- I/O interface for operator panel	X207	I/O	Plug connector, 2 x 13-pin
	- LVDS interface	X208	A	Plug connector, 2 x 10-pin
cable	- Videolink transmitter <=> Videolink receiver	Videolink	I/O	5 m
				10 m
				20 m
				25 m
	- Videolink transmitter <=> PCU	LVDS	I/O	Flat ribbon, 20-pin
		I/O		Flat ribbon, 26-pin

21.3.2 Interface pin assignment for videolink transmitter

Signal types

The abbreviations in the "Signal type" column in the tables below have the following meanings:

I Input

O Output

B Bi-directional

V Power supply

OC Open Collector

X102/X106 (USB)

Interface is configured as high-current USB (500 mA)

Connector designation: X102 / X106; USB socket, 4-pin, type A

Max. cable length 5 m

Max. number of hubs: 3

Note

It is advisable to use only "self-powered" hubs (i.e. hubs with their own power supply).

For transmitter 1:2 , X106 is disconnected via switch S2 (see Section: "Operating and monitoring elements."

21.3.3 Interface assignment for videolink receiver

X203/X204 (USB)

Both interfaces are designed as high-current USB (500 mA).

Connector designation: X203/X204; USB socket,2 x 4-pin, type A

Max. cable length Mouse, printer, keyboard: 5 m

If hub used: 3.5 m *)

*) length incl. the supply cable to hub and connected terminal; a max. of 1 hub is allowed. It should be noted that some keyboards already have a hub.

X205 (USB keyboard interface)

Interface is configured as high-current USB (500 mA)

Connector designation: X205; plug connector, 2 x 5-pin

Max. cable length 0.5 m

Table 21-4 Pin assignment of connector X205 (USB keyboard interface)

Pin	Signal name	Signal type	Meaning
1	P5V_fused	VO	+ 5 V (fused) for external USB interface
2	USB_DM	B	USB data -
3	USB_DP		USB data +
4,5	GND	V	Ground
6, …, 10	N.C.	---	Unassigned

X206 (power supply)

Connector designation: X206; terminal block, 3-pin

Table 21-5 Pin assignment of connector X206 (videolink receiver)

Pin	Signal name	Signal type	Meaning
1	24 VDC	VI	DC 24 V
2	GND	V	Ground for 24 V DC
3	PI	---	Protective earth

21.3.4 Pin assignment of the interfaces

For the pin assignments of the individual interfaces, refer to section:
"Connection Conditions", section: "Secondary electrical conditions".

21.4 Mounting

21.4.1 Videolink transmitter to PCU

21.4.1.1 Flat mounting

Note

The tightening torques for all screws are: M3: 0.8 Nm / M4: 1.8 Nm

We recommend the following mounting directions for optimum heat dissipation:

• "Device fan upwards"

• "Device fan to left" (not possible with "upright" mounting)

You will find the reference diagrams for the individual mounting stages at the end of the description of the procedure.

Procedure

1. Check the DIP switch S2 (if available). With "flat" mounting, it must be set to 1/1 (X 106) (see Section: "Control and monitoring elements" → "Videolink transmitter"!
2. Select display coding switch S1 according to the display type used (to prevent damage when setting S1, you must note the variants under Section: "Control and monitoring elements" → "Videolink transmitter"!
3. First, install the mounting bracket on the PCU **(B)**.
4. Hook the videolink transmitter into this mounting bracket **(D)**.
5. Mount the second mounting bracket after attaching it to the opposite hinge bolt **(A)** of the video link transmitter.
6. Plug the connecting cable into the sockets on the PCU **(C)**.
7. Swivel the videolink transmitter into place on the PCU **(D)** .
8. Slide the videolink transmitter along the angular hinge bearing (to left in Fig. **D**, see arrow) and push it into the position shown in the illustration**(E)**.
9. Secure the videolink transmitter to the mounting brackets with the screws supplied **(F)**.

The videolink transmitter is now firmly secured to the PCU mounting brackets (F) / (G) and can be correctly mounted with the PCU.

CAUTION
If it is necessary to dismantle the videolink transmitter, please release the fastening screws and slide the video transmitter horizontally before swiveling it away from the PCU, in accordance with step 8 of the instruction and figure **(D)**. Otherwise, damage is likely.

Reference diagrams

(A)

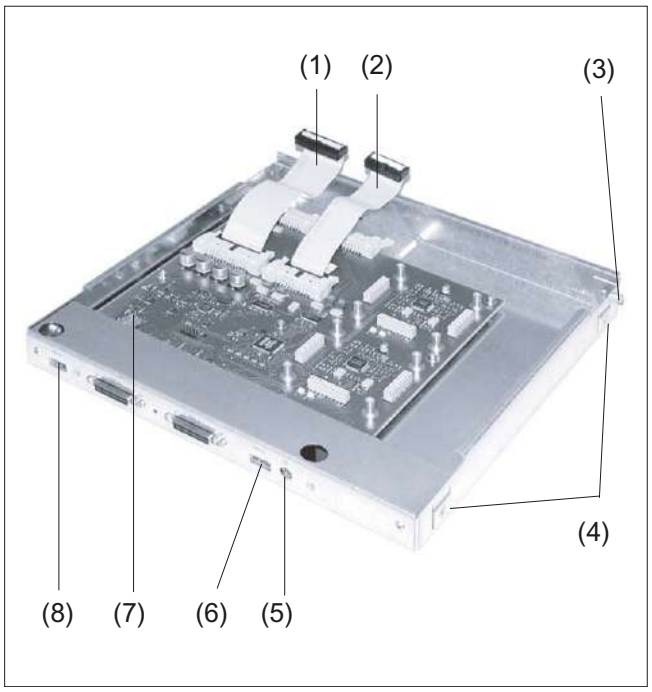

Figure 21-8 Videolink transmitter 1:2 with connecting cables

(1) IO/USB cable K1 (to the PCU)
(2) Display cable K2 (to the PCU)
(3) Hinge bolts
(4) Threaded holes for fastening screws
(5) Display coding switch S1 (rotary switch)
(6) USB port X106
(7) DIP switch S2
(8) USB port X102

(B)

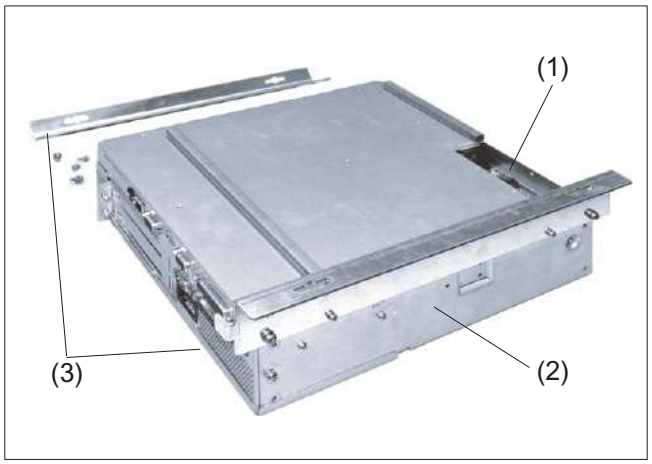

Figure 21-9 PCU with flat mounting brackets

(1) Connection for central operating panel front
(2) PCU 50
(3) Mounting bracket (flat)

(C)

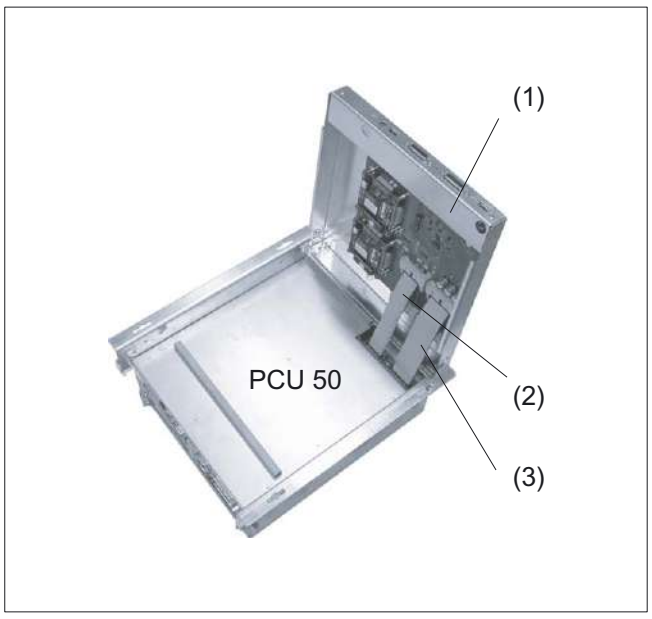

Figure 21-10 Videolink transmitter hooked into place with the hinge bolts

(1) Videolink transmitter
(2) Display cable K2
(3) I/O / USB cable K1

(D)

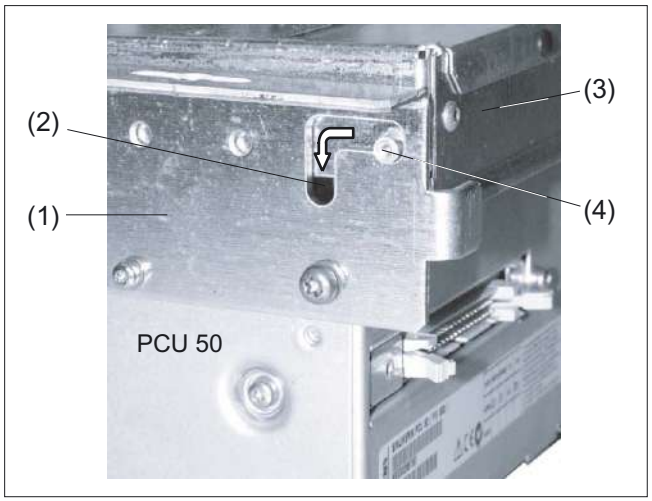

Figure 21-11 Hinge of the videolink transmitter prior to alignment on the PCU

(1) Mounting bracket (flat)
(2) Hinge bearing
(3) Videolink transmitter
(4) Hinge bolts

(E)

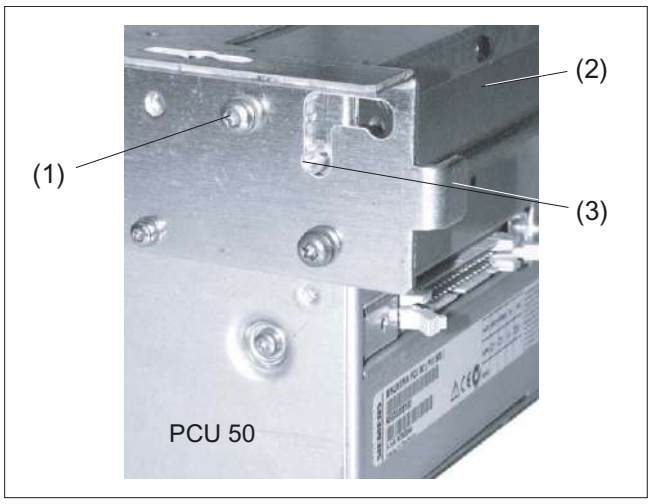

Figure 21-12 Videolink transmitter, aligned and screwed tight

(1) Mounting screw
(2) Videolink transmitter
(3) Hinge bolts

(F)



Figure 21-13 PCU/transmitter unit assembled for "flat" mounting

(1) Videolink transmitter
(2) Cover plate over connection for central operator panel front
(3) PCU 50

(G)

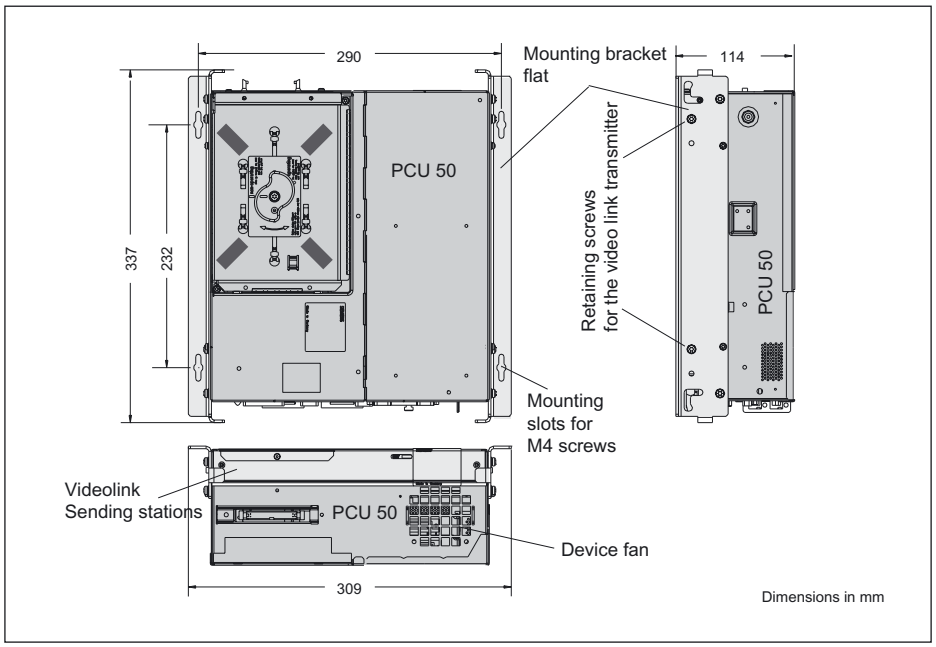

Figure 21-14 Joining of PCU 50 and videolink transmitter using the flat mounting brackets

Installation of PCU/transmitter unit

For flat installation, the PCU Videolink transmitter mounting unit is installed flat on the control cabinet wall (see figure "Configuring the distributed configuration with videolink with up to two operator panel fronts", Section: "Description" → "Configurations").

Features:

- Hard disk easily accessible
- Space required in control cabinet relatively high

21.4.1.2 Upright mounting

Procedure

1. Set DIP switch S2 (if present) to 1/1 (X106; see Section: "Control and monitoring elements" → "Videolink transmitter".
2. Disconnect the two cables from the transmitter.
3. Insert the free ends of the ribbon cables in the sockets of the PCU first (see Fig. C → "flat mounting").
4. Reconnect the two cable ends to the transmitter.
5. Screw the PCU and videolink transmitter together using the "upright" mounting bracket (see Fig. below).
6. Set the S1 display coding switch to the display type being used.

CAUTION
To prevent damage when setting S1, it is essential to observe Section: "Control and monitoring elements" → "Videolink transmitter"!

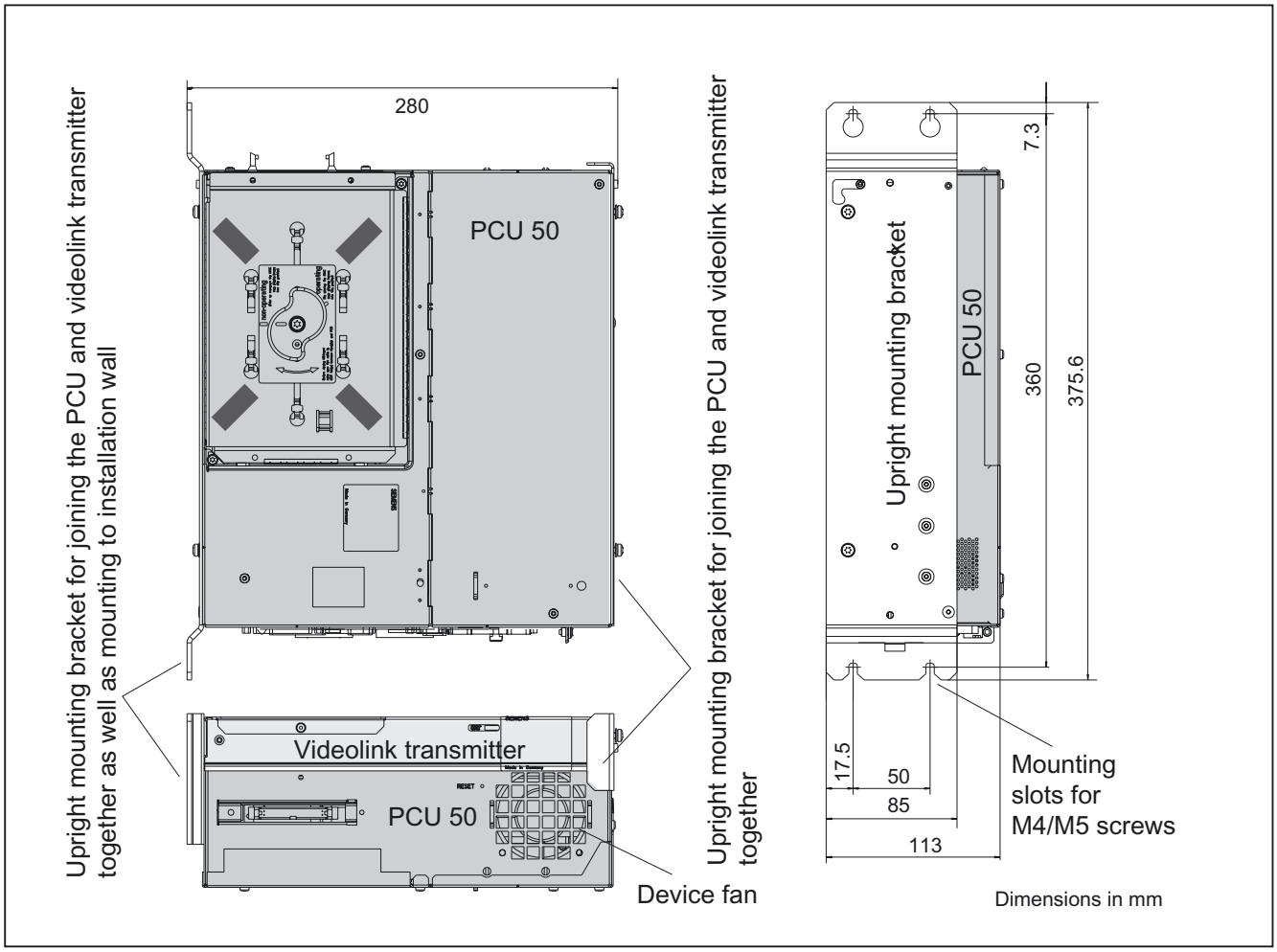

Figure 21-15 Joining of PCU 50 and videolink transmitter using the upright mounting brackets

Installation of PCU/transmitter unit

For upright mounting, the PCU videolink transmitter unit is installed with the rear wall plate at a 90° angle to the rear wall (see figure "Configuring the distributed configuration with videolink with up to two operator panel fronts" in Section: "Description" → "Configurations").

Features:

- Only one mounting position possible: Fan at top
- Space required with PCU 50 less than that required for flat mounting
- Keep a clearance for hard disk operation (approx. 10 cm).

21.4.1.3 Central mounting on operator panel front

The components are joined together in the same way as for "upright" mounting, with the following exceptions:

- DIP switch S2 (see Section: "Control and monitoring elements" → "Videolink transmitter"), if present, must be set to 2/2 (X108).
- The cover plate on the transmitter (see Fig. F → "Flat mounting") must be removed prior to mounting.
- The "central" mounting brackets are used (see Fig. below).
- The assembled PCU videolink transmitter unit is connected to an operator panel front and secured to the mounting bracket with the knurled screws as described in Chapter: “Operator panel front OP 012”, Section: "Mounting".

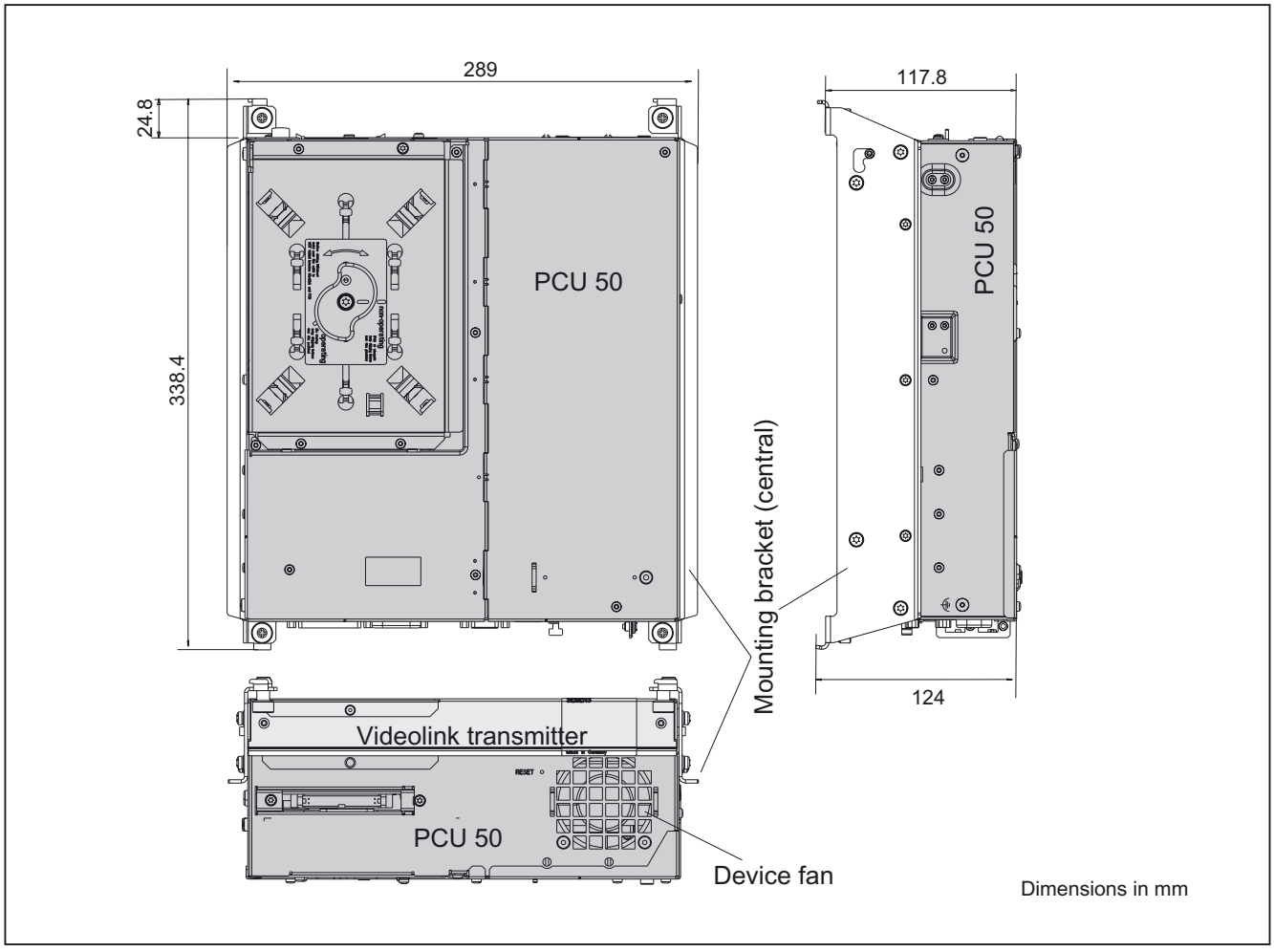

Figure 21-16 Joining of PCU 50 and videolink transmitter using the central mounting brackets to be attached to the operator panel front

Installation of PCU/transmitter unit

With "central" mounting, the PCU/videolink transmitter unit is mounted in the usual way directly behind an operator panel front.

Features:

- Mounting depth of the operator panel front increased by approx. 30 mm
- Not possible with OP 010S, not possible with PCU 70 (too heavy).

21.4.2 Videolink receiver on operator panel front

Before the receiver is mounted on the panel front, the two interface cables for the panel front (IO/USB cable K1 and display cable K2) must be inserted into the correct sockets on the videolink receiver (visible behind the casing cut-out).

For more detail, see section: “OP 012,” section: "Interfaces" / "Mounting."

OP 010S

The operator panel front OP 010S and the receiver are screwed together without additional mounting brackets.

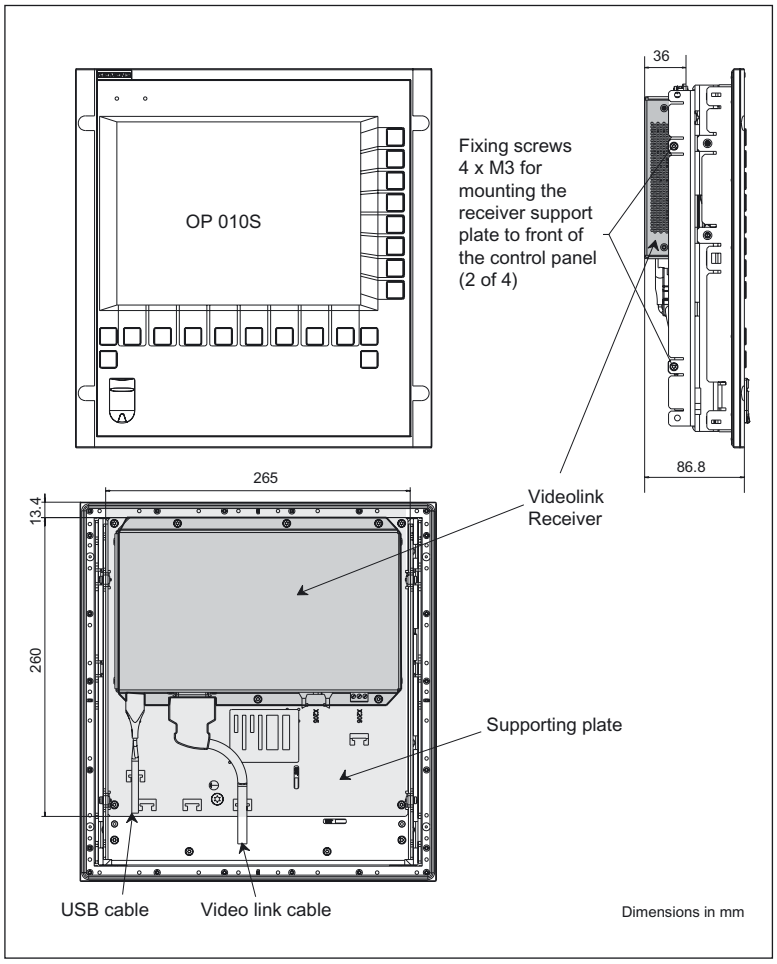

Figure 21-17 Front, side and rear view of operator panel front OP 010S with screwed-on videolink receiver

OP 010C, OP 012, OP 015, OP 015A, TP 12, TP 015A

For mounting on an operator panel front OP 010C, OP 012, OP 015, OP 015A, TP 012 or TP 015A (see figure in Section: "Description" → "Components" → "Videolink receiver") two separately ordered mounting brackets are needed (see Section: "Description" → "Configurations").

1. Screw the mounting bracket onto the receiver. The ends with the hitch-type lugs must point to the right (see figure in Section: "Description" → "Components" → Videolink receiver") or to the left (see figure below).
2. Hook the receiver mounting bracket (like a PCU) with the two hitched lugs into the operator panel front, swing it shut and secure it with the four knurled screws .

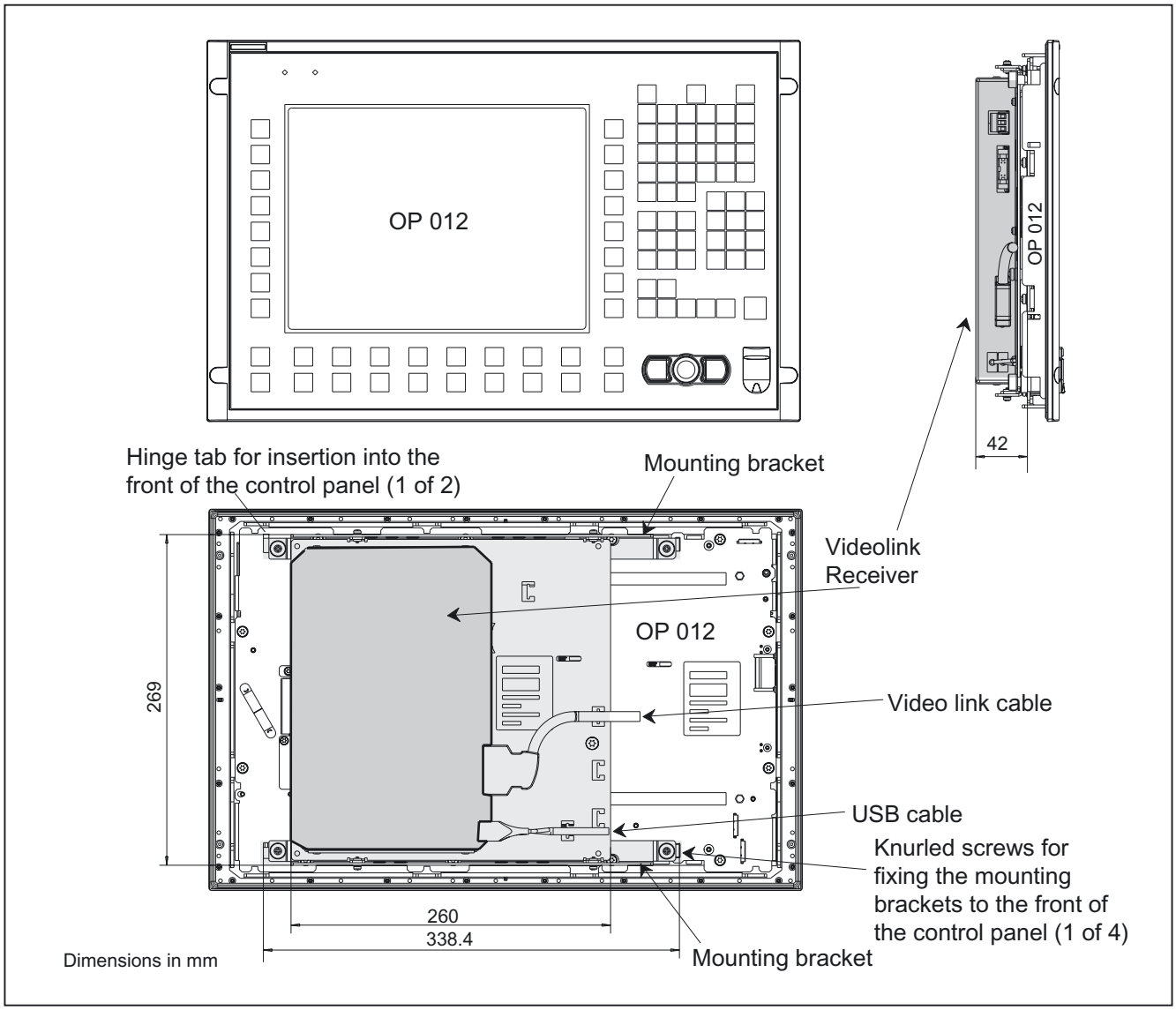

Figure 21-18 Operator panel front (example, OP 012 with attached videolink receiver Order No. 6FC5247-0AF22-0AA0), front, rear and side view

21.5 Connectors

21.5.1 Cable connections

The figure in Section: "Description" → "Components" → "Videolink receiver") shows the connections for connecting to the outside:

- the double USB port,
- the video link interface (cable inserted)
- the keyboard interface,
- the power supply connection

As some of the connections used do not have strain-relief-cable, it is recommended to secure the cables with cable binders to the u-shaped cover cutouts on the mounting plate.

21.5.2 Power Supply

Operator panel fronts, PCU and videolink receivers should be supplied with 24 V DC (the videolink transmitter is supplied with power from the PCU).

Note

To prevent error messages when the PCU is booted, the operator panel front should be switched on **at the same time** as the PCU via the 24 V DC supply.

21.6 Technical specifications

21.6.1 Operator panel front

For the technical data of the operator panel fronts, please refer to the corresponding sections: “OP 010S”, “OP 010C”, “OP 012”, “OP 015”, “OP 015A”, “TP 012” and “TP 015A”.

21.6.2 PCU 50 / PCU 70

For the technical data of the PCUs, please refer to the corresponding Sections: "PCU 50" and "PCU 70".

21.6.3 Videolink transmitter

Security			
Safety class	III; PELV acc. to EN 50178		
Degree of protection per EN 60529	IP00 / mounted on PCU: IP20		
Approvals	CE / cULus		
Electrical specifications			
Voltage supply	from the PCU		
Power consumption, max.	...-1AA0: 1.9 W	...-2AA0: 2.5 W	
Mechanical data			
Dimensions (mm)	Width: 265	Height: 277	Depth: 35
Weights	Videolink transmitter 1.2 kg	Mounting bracket flat/central: 0.6 kg	Upright mounting bracket 1.0 kg
Mechanical ambient conditions	**Operation**	**Transport** (in transport packaging)	
Vibratory load	10 -58 Hz: 0.075 mm 58 -200 Hz: 9.8 m/s^2 3M4 per EN 60721-3-3	5 -9 Hz: 3.5 mm 9 -200 Hz: 9.8 m/s^2 2M2 per EN 60721-3-2	
Shock stressing	50 m/s^2, 30 ms, 18 shocks 3M2 per EN 60721-3-3	300 m/s^2, 6 ms, 18 shocks 2M2 to EN 60721-3-2	
Climatic ambient conditions			
Cooling	Free convection, without fan		
Condensation, spraying water and icing	Not permitted		
Supply air	Without caustic gases, dusts and oils		
	Operation	**Storage/shipping** (in transport packaging)	
Applicable standards	EN 60721-3-3	EN 60721-3-1 / -3-2	
Climate class	3K5	1K3 / 2K4	
Temperature limits	5 ... 55 ºC	-25 ... 55 ºC	
Temperature change	Max. 10 K/h	Max. 18 K/h	

Limits for relative humidity	10 ... 80%	5 ... 95%
Permissible change in the relative air humidity	max. 0.1 % /min	

21.6.4 Videolink receiver

Security			
Safety class	III; PELV acc. to EN 50178		
Degree of protection per EN 60529	IP00		
Approvals	CE / cULus		
Electrical specifications			
Voltage supply	from the PCU		
Power consumption, max.	40 W		
Mechanical data			
Dimensions (mm)	Width: 260	Height: 265	Depth: 37
Weight	1.8 kg		
Mechanical ambient conditions	**Operation**		**Transport** (in transport packaging)
Vibratory load	10 -58 Hz: 0.075 mm 58 -200 Hz: 9.8 m/s^2 3M4 per EN 60721-3-3		5 -9 Hz: 3.5 mm 9 -200 Hz: 9.8 m/s^2 2M2 per EN 60721-3-2
Shock stressing	50 m/s^2, 30 ms, 18 shocks 3M2 per EN 60721-3-3		300 m/s^2, 6 ms, 18 shocks 2M2 to EN 60721-3-2
Climatic ambient conditions			
Cooling	Free convection, without fan		
Condensation, spraying water and icing	Not permitted		
Supply air	Without caustic gases, dusts and oils		
	Operation		**Storage/shipping** (in transport packaging)
Applicable standards	EN 60721-3-3		EN 60721-3-1 / -3-2
Climate class	3K5		1K3 / 2K4
Temperature limits	0 ... 45 ºC (at front) 0 ... 55 ºC (at rear)		-25 ... 55 ºC
Temperature change	Max. 10 K/h		Max. 18 K/h
Limits for relative humidity	10 ... 80%		5 ... 95%
Permissible change in the relative air humidity	max. 0.1 % /min		

Thin Client Unit (TCU) 22

22.1 Description

22.1.1 Overview

The Thin Client Unit (TCU) for distributed installation permits physical separation of SINUMERIK OP/TP operator panel fronts and SINUMERIC PCU/NCU as well as connection of up to four operator panel fronts each with a TCU to a PCU/NCU. For this reason, the user interface is copied to several OPs with one TCU each.

Validity

This description applies to:

Name	Order number:
Thin Client Unit (TCU)	6FC5312-0DA00-0AA1
Thin Client Unit (TCU)	6FC5312-0DA00-0AA1

Features

- Design of flat operator panels through shallow installation depth and low power dissipation.
- Graphics: Resolution 640 x 480 to 1024 x 768 pixels; 16-bit color resolution
- More stable mounting of the SINUMERIK PCU in the control cabinet.
- Efficient operator control of larger machines thanks to up to 5 operator panels
- Signal transmission between PCU/NCU and operator panel front via Industrial Ethernet (see section: "Accessories")
- Easy installation and service-friendly layout thanks to the component structure
- The same operating screen is shown synchronously on all OPs and can be used from all OPs. Operation on a Thin Client has the same authorization rights as operation on an operator panel front connected directly to the PCU.
- Mixed use of operator panel fronts on a TCU or with an integrated TCU and an operator panel front directly on the PCU is possible.
- The distance between PCU and operator panel fronts is determined by the maximum distance of two access points (100 m).

Prerequisites

- SINUMERIK 810D / 840D / 840Di
  - SINUMERIK PCU 50 / PCU 70 with PCU base software WinXP 7.4 and later and PCU base software Thin Client, operator panel fronts
  - SINUMERIK PCU 50.3
  - Operator panel fronts:
    OP 010 / OP 010C / OP 010S / OP 012 / OP 012T/ TP 012 / OP015 / OP 015A / TP 015A with TFT display
- SINUMERIK 840D sl/840Di sl
  - NCU 710.1 / NCU 720.1 / NCU 730.1
  - SINUMERIK PCU 50.3
  - Operator panel fronts:
    OP 010 / OP 010C / OP 010S / OP 012 / OP 012T/ OP 015 / OP 015A / TP 015A with TFT display

Design

The TCUs are coupled via Ethernet as Thin Clients in a dedicated subnetwork (via DHCP server on the PCU/NCU) to the PCU/NCU.

Ports:

- 2 x USB 1.1 for connection of mouse and keyboard
- Ethernet 10/100 Mbit/s

22.1.2 Configurations

Configurations

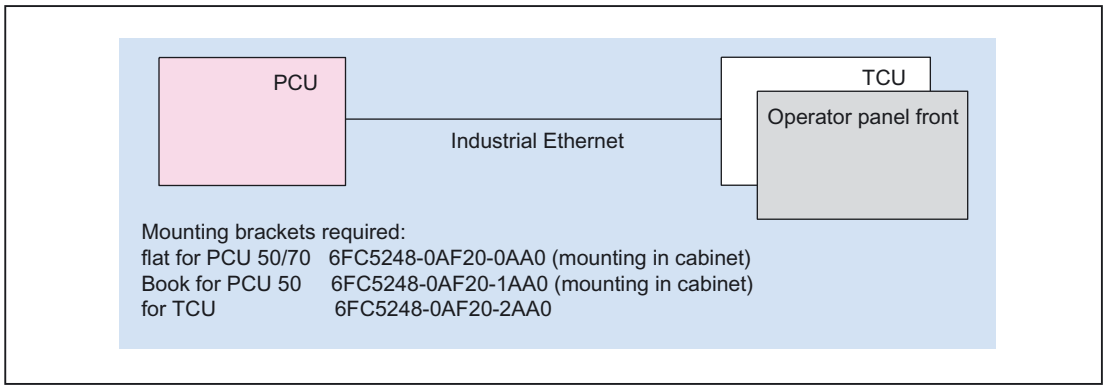

Figure 22-1 Distributed installation with TCU: minimum configuration with no central operator panel front on the PCU

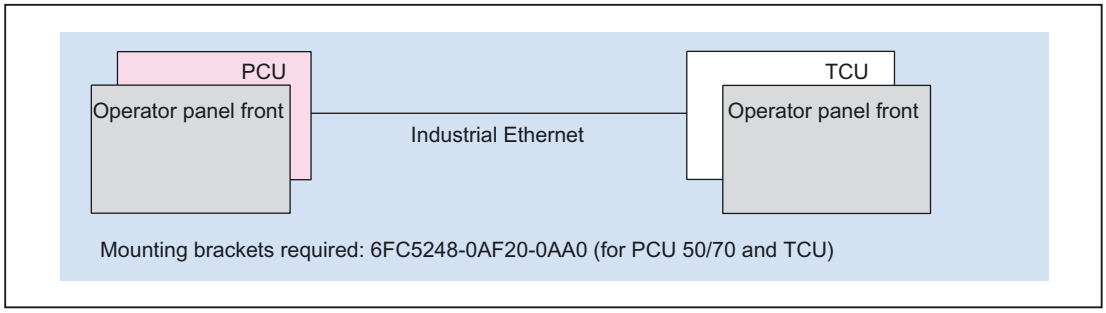

Figure 22-2 Distributed installation with TCU: Configuration with central operator panel front on the PCU

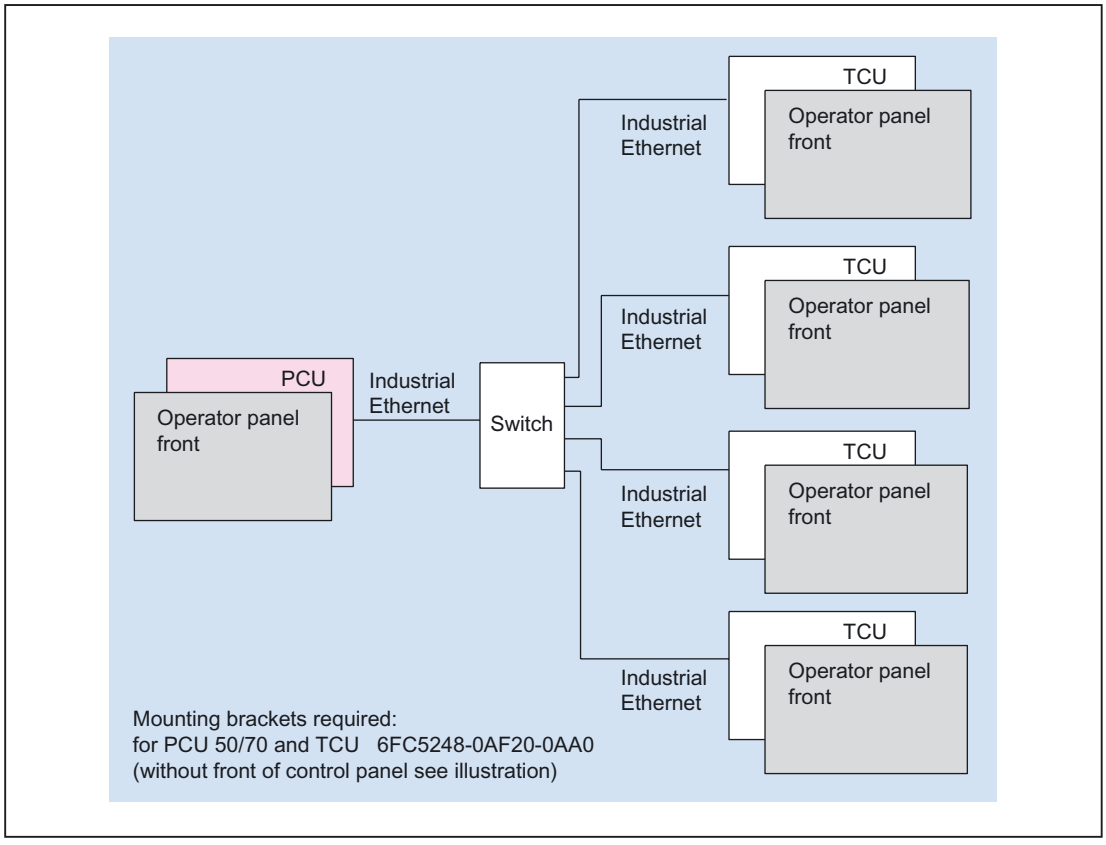

Figure 22-3 Distributed installation with TCU: Configuration with five operator panel fronts on PCU

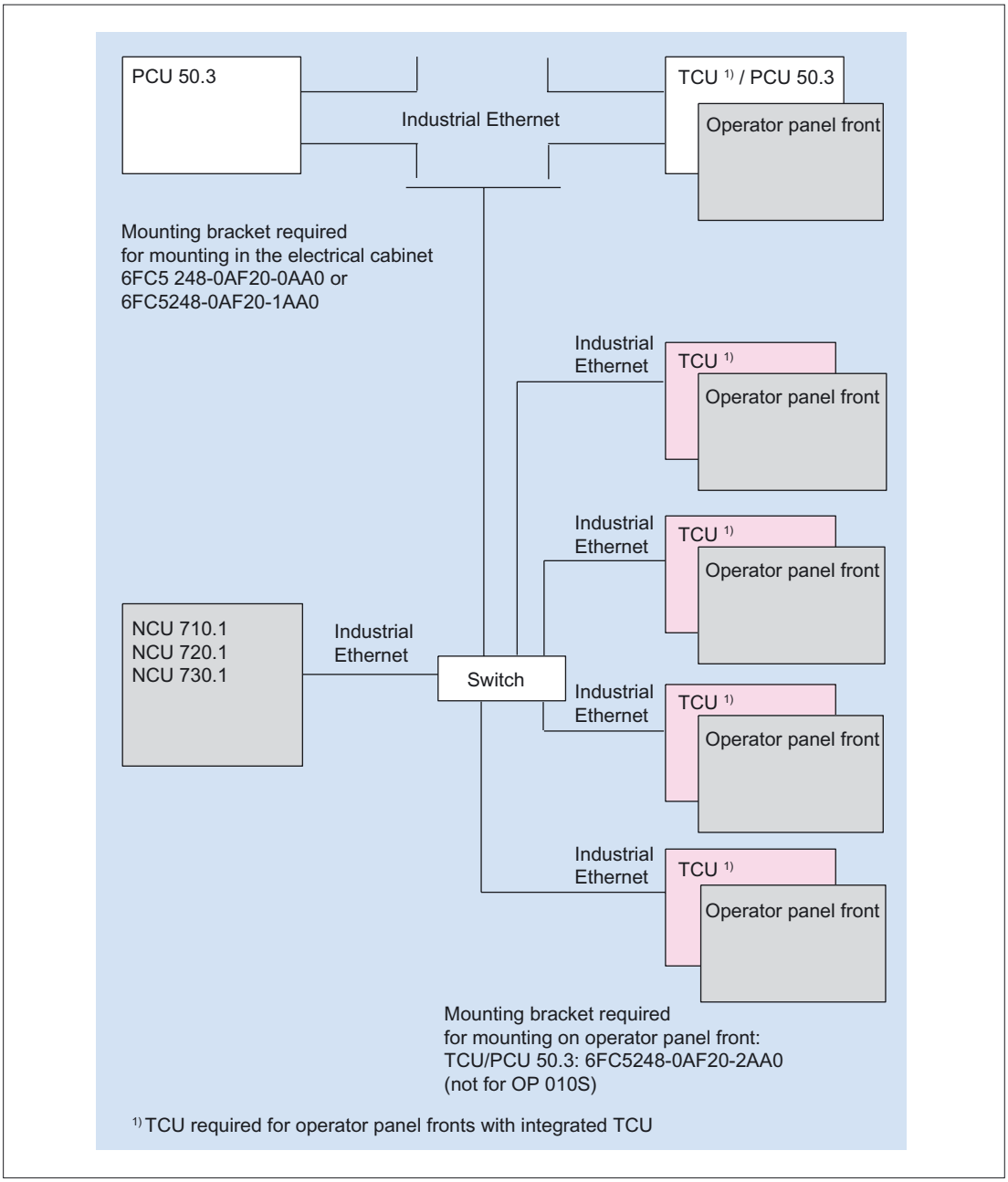

Figure 22-4 Connection overview for TCU, several TCUs on NCU 710.1/NCU 720.1/NCU 730.1

Reference: /IAM/ Commissioning Manual (HMI)
Installation and start-up TCU (IM5)

22.2 Interfaces

Overview

Function	Designation	Input/output	Type
• Ethernet interface	X202	O	8–pin RJ45 socket
• USB port	X203/204	O	2x USB-A
• Reserved	X205		
• Power supply 24 V DC	X206	I	3-pin terminal block
• I/O interface *)	X207	I/O	2 x 13-pin plug connector
• LVDS display interface *)	X208	O	2 x 10-pin plug connector

*) for connection to an operator panel front

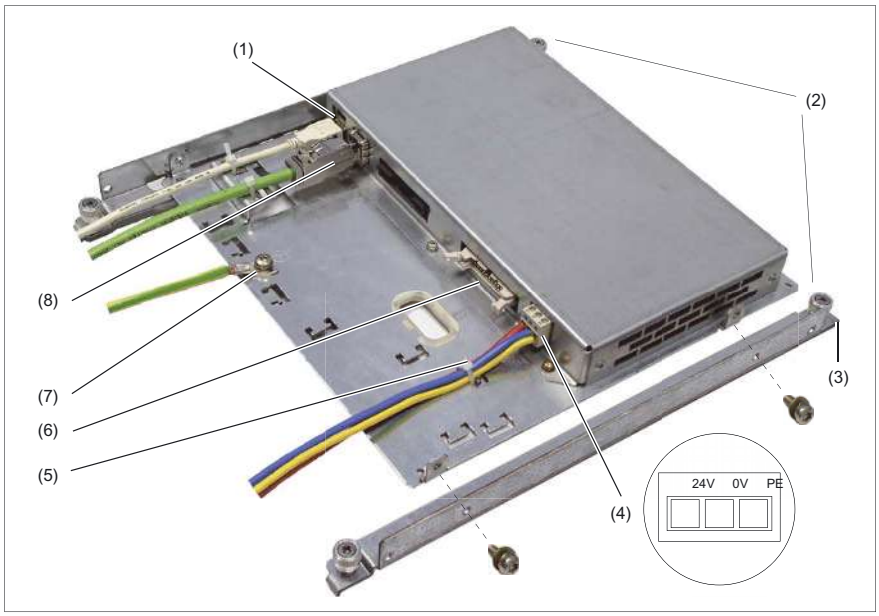

Figure 22-5 Front view of the TCU with interfaces (Ethernet cable inserted, one mounting bracket mounted)

(1)	X203 / X204	2 USB-A ports
(2)		Mounting bracket (1 of 2)
(3)		Hinged catch for latching into operator panel front (1 of 2)
(4)	X206	24 V DC power supply (detail)
(5)		Cable tie to secure the connector
(6)	X205	Reserved
(7)		Ground terminal
(8)	X202	Ethernet port

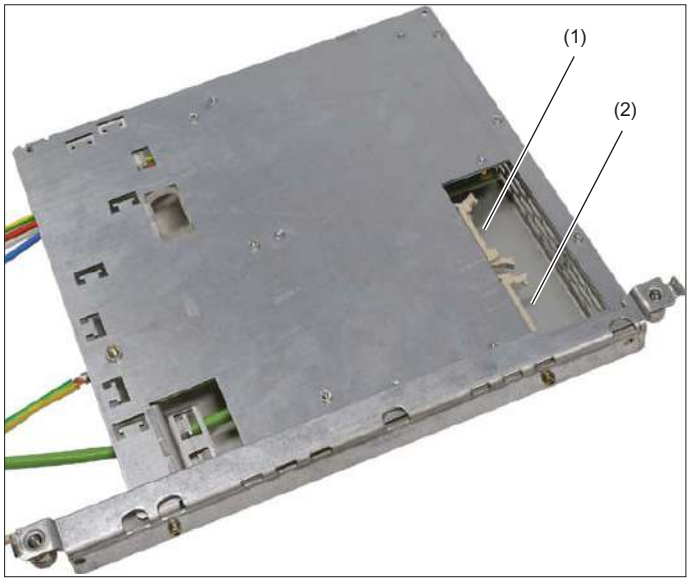

Figure 22-6 Rear view of the TCU with interfaces

(1)	X208	Display cable K2
(2)	X207	I/O USB cable K1

Description

X202	Ethernet port	8-pin standard Ethernet socket
X203/ X204	USB	One of the interfaces can be loaded with 500 mA (high current), the other, with 100 mA. Connector designation: X203/X204; USB socket, 2 x 4-pin, type A Max. cable length: Mouse, keyboard: 5 m; if hub used: 3.5 m *) *)Length including the supply cable to hub and connected terminal; only one hub is allowed. It should be noted that some keyboards already have a hub.
X206	Power Supply	3-pin terminal block DC 24 V; for connection assignment, see detail in figure above
X207/ X208		X207: 26-pin plug connector for the IO/USB cable K1 for connecting the operator panel front X208: 20-pin plug connector for the LVDS display cable K2 for connecting the operator panel front
	Pin assignments	Unless explicitly specified, you can take the pin assignment for the connections from section: "Connection conditions".

22.3 Mounting the TCU on the operator panel front

Before the two components are assembled, the two interface cables for the operator panel front (IO/USB cable K1 and display cable K2, see Fig. A) must be inserted into the correct sockets on the TCU (visible behind the casing cut-out).

For more detail, see section: “OP 012,” section: "Interfaces" / "Mounting."

OP 010S

The operator panel front OP 010S and the TCU are screwed together without additional mounting brackets.

(A)

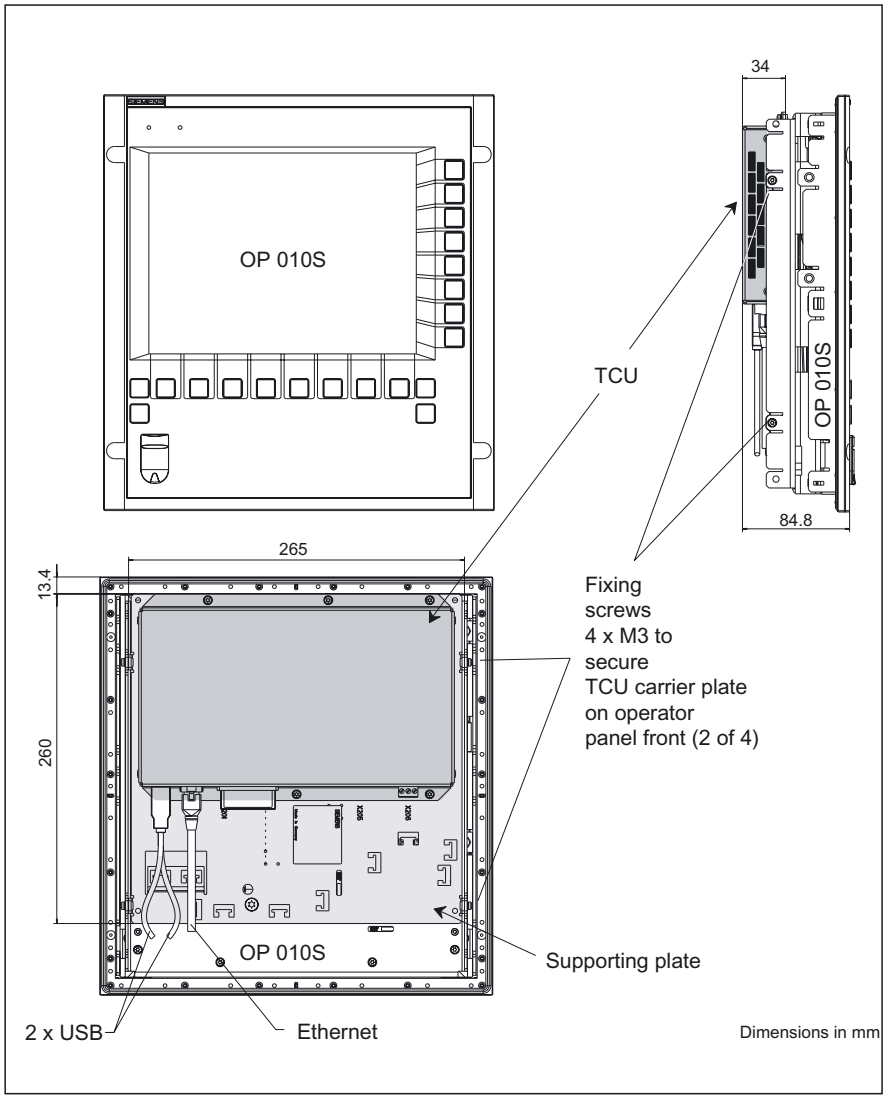

Figure 22-7 Mounted TCU with OP 010S, front, side and rear view

OP 010, OP 010C, OP 012, OP 015, OP 015A, TP 012, TP 015A

Two mounting brackets (must be ordered separately) are required for mounting on an operator panel front of type OP 010, OP 010C, OP 012, OP 015, OP 015A, TP 012 or TP 015A (see Section: “Accessories”).

1. Screw the mounting bracket onto the TCU. The ends of the hitch-type catches (see Fig. **B**) must be facing left.
2. Use the two hitch catches to suspend the TCU mounting bracket unit (like a PCU) in the operator panel front. Swing closed after inserting cables K1 and K2 and use four knurled screws to secure.

(B)

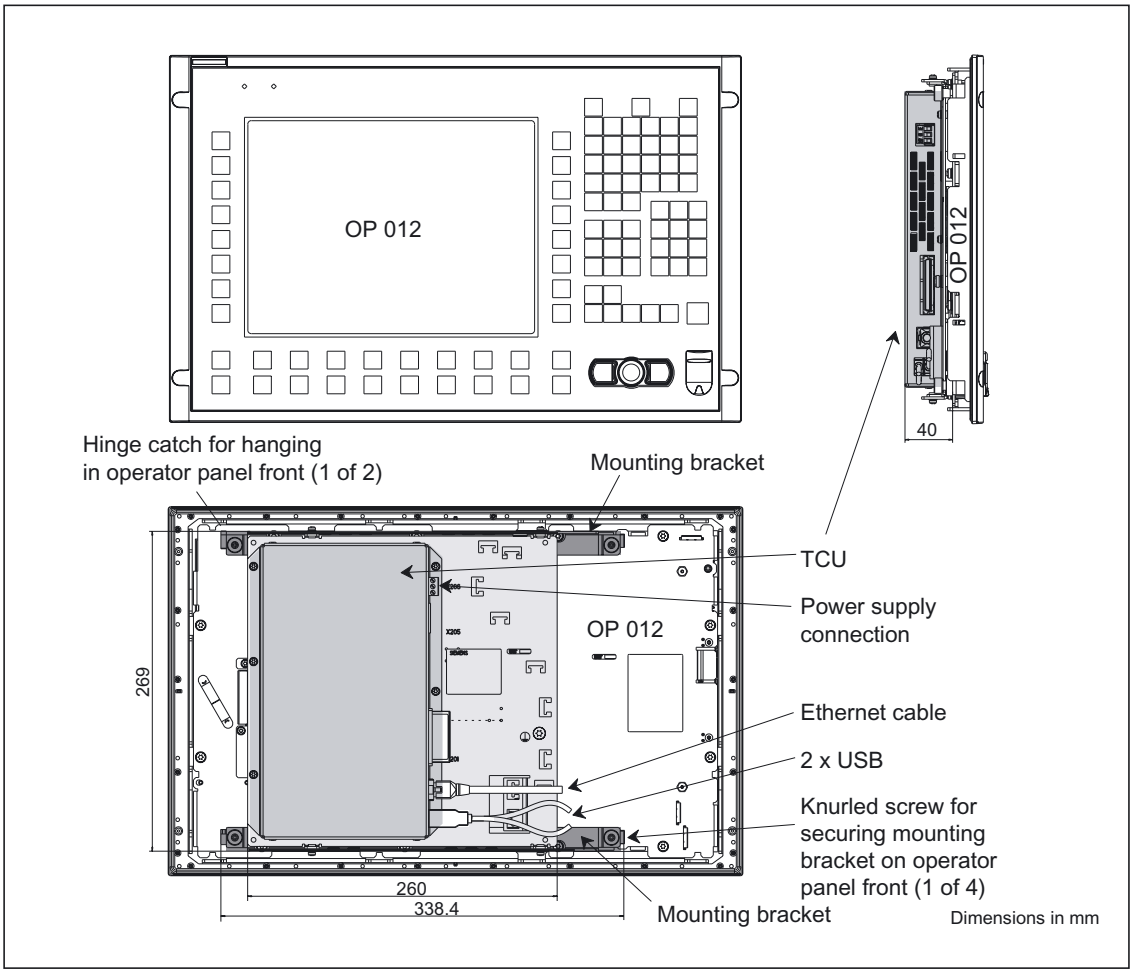

Figure 22-8 Mounted TCU (example with with OP 012) in front, side and rear view

Cable connections

Fig. **(B)** shows the outward-bound connections:

- the double USB port,
- the Ethernet port (cable inserted),

- the keyboard interface,
- and the power supply connection.

Since some of the connections do not have a cable strain relief, it is recommended to secure the cables to the U-shaped lugs on the supporting plate using cable ties (see Fig., section: "Interfaces").

22.4 Technical data

Table 22-1 Thin Client Unit

Safety			
Protective class	III; PELV acc. to EN 50178		
Degree of protection per EN 60529 (IEC 60529)	IP00		
Approvals	CE / cULus		
Electrical data			
Power supply	24 V DC		
Power consumption, max.	36 Watts		
Mechanical data			
Dimensions (mm)	Width: 260	Height: 265	Depth: 40
Weight	1.7 kg		
Mechanical ambient conditions	**Operation**	**Transport** (in transport packaging)	
Vibratory load	10 – 58 Hz: 0.075 mm 58 – 200 Hz: 9.8 m/s^2 3M4 per EN 60721-3-3	5 – 9 Hz: 3.5 mm 9 – 200 Hz: 9.8 m/s^2 2M2 per EN 60721-3-2	
Shock stressing	50 m/s^2, 30 ms, 18 shocks 3M2 per EN 60721-3-3	300 m/s^2, 6 ms, 18 shocks 2M2 to EN 60721-3-2	
Climatic ambient conditions			
Heat dissipation	Free convection, without fan		
Condensation, spraying water and icing	Not permissible		
Supply air	Without caustic gases, dusts and oils		
	Operation	**Storage/shipping** (in transport packaging)	
Applicable standards	EN 60721-3-3	EN 60721-3-1 / -3-2	
Climate class	3K5	1K3 / 2K4	
Temperature limits	0 ... 55 ºC (at rear)	-25 ... 55 ºC	
Temperature change	Max. 10 K/h	Max. 18 K/h	
Limits for relative humidity	10 ... 80% at 25°C	5 ... 95% at 25°C	
Permissible change in the relative air humidity	max. 0.1 % /min		

22.5 Accessories

Table 22-2 Thin Client Unit

Compon.	Description		Amount	Order No.:
Mounting bracket		Mounting bracket for PCU, video link receiver or TCU behind operator panel front	1 set (2 items)	6FC5248–0AF20–2AA0
		Flat mounting bracket for PCU 50/70 with video link transmitter in control cabinet		6FC5248–0AF20–0AA0
		Upright mounting bracket, book for PCU 50 with video link transmitter in control cabinet		6FC5248–0AF20–1AA0
Industrial Ethernet cable	IE FC Standard Cable GP 2 x 2 (Type A)	4-core, shielded TP installation cable for connection to IE FC Outlet RJ45/ IE FC RJ45 Plug; PROFINET-compatible; with UL approval; sold by the meter (max. 1000 m; min. 20 m);	1	6XV1840–2AH10
	IE FC Trailing Cable GP 2 x 2 (Type C)	4-core, shielded TP installation cable for connection to IE FC Outlet RJ45/ IE FC RJ45 Plug 180/90 for use in trailing cables; PROFINET-compatible; without UL approval; sold by the meter (max. 1000 m; min. 20 m);	1	6XV1840–3AH10
	IE FC RJ45 Plug 180	RJ plug connector for Industrial Ethernet with robust metal casing and integrated cutting/clamping contacts; with 180° outgoing cable	1	6GK1001-1BB10-2AA0
Industrial Ethernet switch	SCALANCE X108 unmanaged	with 8 RJ45 ports 10/100 Mbit/s for configuring star topologies	1	6GK5108–0BA00-2AA3
	SCALANCE X208 managed	with 8 RJ45 ports 10/100 Mbit/s for configuring linear, star and annular topologies	1	6GK5208–0BA00-2AA3
	SCALANCE X208PRO managed	with 8 RJ45 ports 10/100 Mbit/s for configuring linear, star and annular topologies; degree of protection IP65 incl. 8 RJ45 and 3 M12 dust protection caps	1	6GK5208–0BA00-2AA6

Handheld Terminal HT 6

23

23.1 Description

The SINUMERIK HT 6 (handheld terminal with a 6" display diagonal) is an operation and programming device and can be used in conjunction with the SINUMERIK 810D, 840D, FM 357-2H and 840Di controls.

Validity

The following description applies to the handheld terminal HT 6
(Order No.: 6FC5403–0AA10–0AA1)

Function blocks

- 80486DX4 microprocessor
  - Operating system DR-DOS
  - Clock frequency 100 MHz
- Memory:
  - SDRAM 16 MB
  - FLASH 8 MB
  - PC memory card: 8 MB FLASH, can be plugged in externally
- LCD with
  - 5.7" diagonal, monochrome (blue) STN, 320*240 pixels (1/4 VGA), backlit, variable brightness and contrast
  - 16, ..., 20 lines, 38, ..., 52 characters per line (as configured)
- Membrane keyboard with
  - Machine control key block: RESET, ALARM CANCEL, JOG, TEACH, AUTO, CONTROL PANEL FUNCTION, STOP, START, twelve traversing keys (6 + and 6 – with slide-in labels)
  - Horizontal softkey bar with eight keys
  - Number block (twelve keys, shift key switches to alpha characters)
  - Cursor key block (nine keys)
  - Customer-configurable keys: S1, S2, U1, ..., U8 (can be labeled with slide-in labels)
  - Function keys: Operating area (MENU SELECT), HELP, Recall (^)
- Rotary override switch (19 positions with stop)

- EMERGENCY STOP key
- At the rear of the device:
  - Enabling buttons (two buttons with two channels each, with two positions for Safety Category 3)
  - HT 6 cable connection
  - Serial RS-232 interface (COM1)
  - PC memory card interface
  - PS/2 keyboard interface
  - Reset pushbutton
  - Belt fastener
  - Two M5 threaded holes for customized bracket.

M5 threaded bushings for mounting bracket

For a mounting bracket of the user, there are two M5 threaded bushes on the rear side of the HT 6, see figure.
For the two threads, adhere to a tightening torque of 1.8 Nm, so that the bushings are not overloaded.

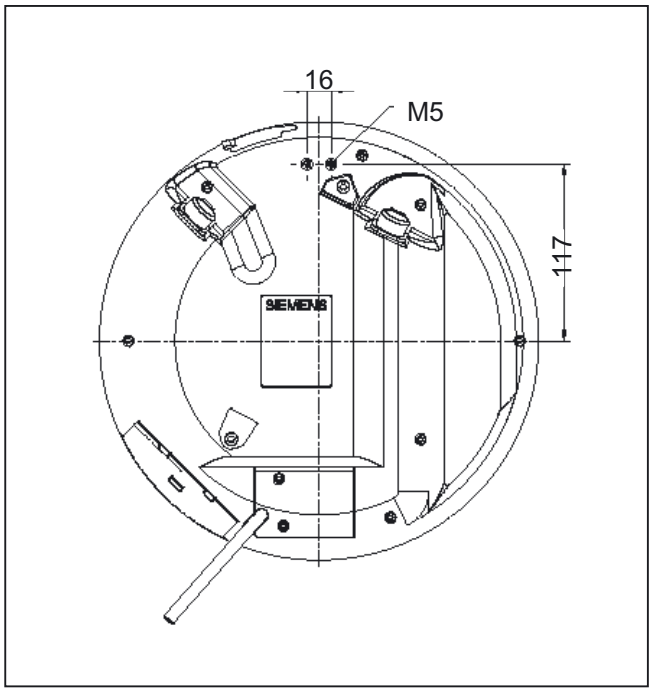

Figure 23-1 M5 threaded bushes for fixing bracket

23.2 Operator controls and indicators

23.2.1 View

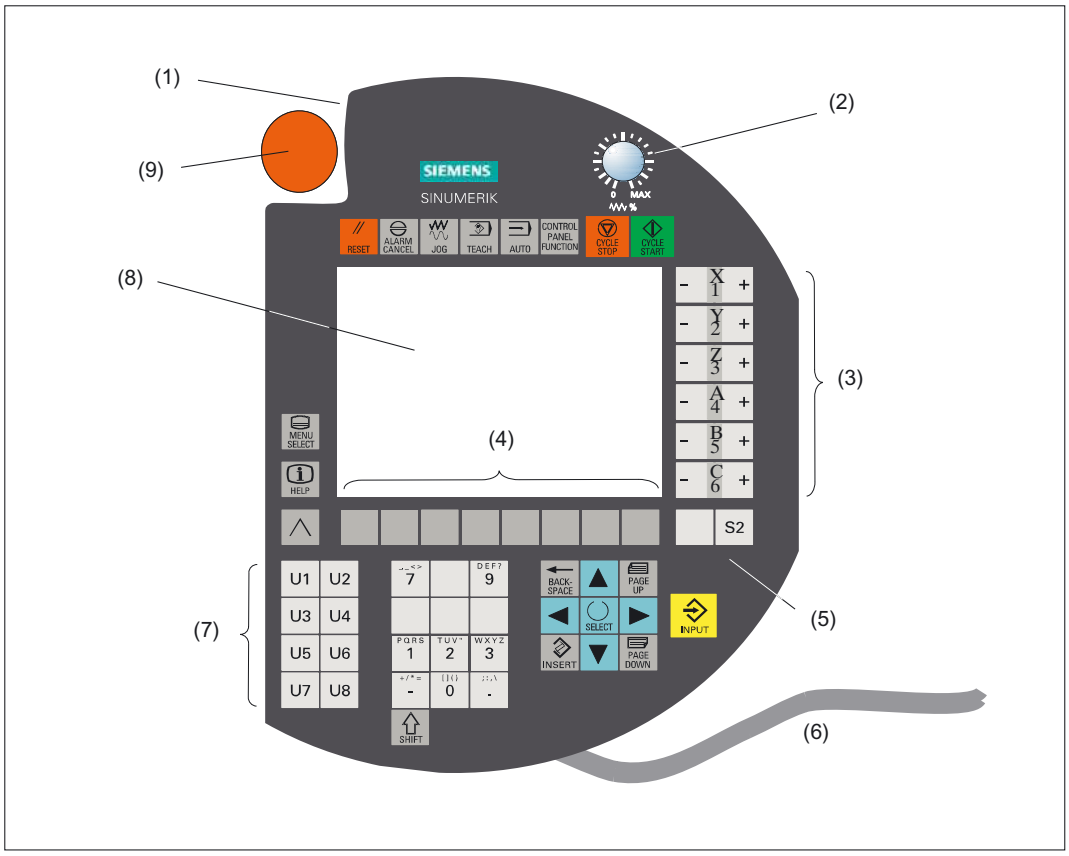

Figure 23-2 User interface of the HT 6

(1) Rear side: Two enabling switches
(2) Override rotary switch (with limit stop)
(3) Traversing keys, user-configurable, can be labeled (see Section: "Spare parts")
(4) Softkeys
(5) Special keys, user-configurable
(6) Connecting cable
(7) Function keys, user-configurable, can be labeled (see Section: "Spare parts")
(8) Display
(9) EMERGENCY STOP key

23.2.2 Description

Number block

The Shift key is used to switch the function of the number block keys between text and numerical mode. Changeover only becomes effective when the Shift key is released.
In text mode, each key is assigned to several alpha characters. The required character is selected with Shift + character key.

EMERGENCY STOP key

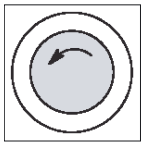

Emergency stop button
Press the red button in emergencies when

- people are at risk,
- there is the danger of machines or the workpiece being damaged.

As a rule, when operating the EMERGENCY STOP button, all drives are brought to a standstill with max. braking torque.

Turn the EMERGENCY STOP button to the left to unlatch it.



Machine manufacturer
For other reactions to the EMERGENCY STOP:
refer to the machine tool manufacturer's instructions

Enabling button

The enabling button is designed as a 2-channel, 2-position switch (see Section: "Interfaces" → "Distributor").

In the case of operations that require enabling (e.g. manual traversing within a danger zone), only one enabling button has to be operated.

Note

Press the enabling button firmly as far as the stop to ensure reliable action.

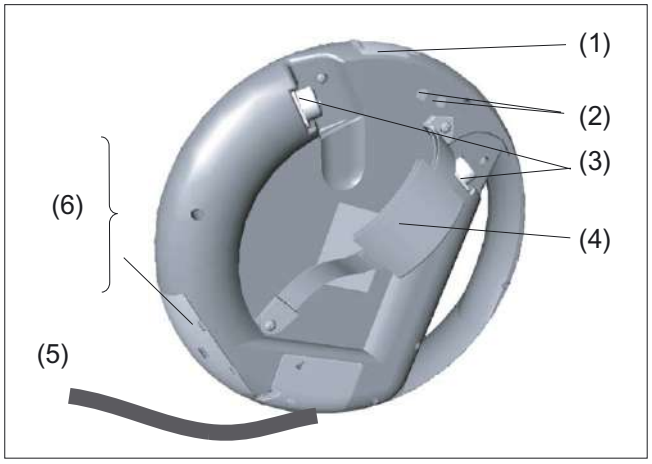

Figure 23-3 Rear of the HT 6 with the interfaces

(1) V.24 interface (under the cover)
(2) M5 threaded bushes for mounting bracket
(3) Agreement button
(4) Belt fastener
(5) Connecting cable
(6) Interface cover
- PC memory card interface
- MF2 keyboard interface

RESET button (under the cover)

23.3 Interfaces

Cable interface (X101)

Connector designation:	**X101**
Connector type:	15-pole high-density sub-D pin with UNC 4 screwed joint

Table 23-1 Pin assignments on connector X101

Pin	Signal name	Signal mode	Signal type
1	B	RS 485 differential signal	B
2	N.C.	Not connected	
3	ZS2.2	Enabling button, Contact 2	
4	ZS1.2	Enabling button, Contact 1	
5	NA1.1	EMERGENCY STOP button, Contact 1	
6	A	RS 485 differential signal	B
7	N.C.	Not connected	
8	ZS1.1	Enabling button, Contact 1	
9	NA1.2	EMERGENCY STOP button, Contact 1	
10	NA2.1	EMERGENCY STOP button, Contact 2	
11	GND	M (M_{ext} for HT 6)	VI
12	Ub	24 V (power supply for HT 6)	VI
13	ZS2.1	Enabling button, Contact 2	
14	SHIELD	Shield	
15	NA2.2	EMERGENCY STOP button, Contact 2	

Installation of connecting cable

1. Remove the two M3 Torx screws of the connecting cable cover.
2. Take off the cover.
3. Connect the connecting cable to the bushing and secure it with the screws.
4. Put the cover on and tighten the screws again.

V24 interface X201

Connector designation:	**X201**
Plug-connector type	9-pole Sub-D (pin)
Max. cable length	10 m

Table 23-2 X201 pin assignments

Pin	Signal name	Signal mode	Signal type
1	DCD	Data Carrier Detect	O
2	RxD	Receive Data	I
3	TxD	Transmit Data	O
4	DTR	Data Terminal Ready	I
5	1M	Ground	VO
6	DSR	Data Send Ready	O
7	RTS	Request To Send	I
8	CTS	Clear To Send	O
9	RI	Ring Indicator	I

Signal type

B: **B**i-directional
I: **I**nput
O : **O**utput
VI: **V**oltage **I**nput
VO: **V**oltage **O**utput

Releasing the V.24 cover

1. Move the lug of the cover upward.
2. Rotate the cover to the side; the V.24 interface is accessible.
3. Put the cover for the assembly on the HT 6 and allow it to click in place by pressing down carefully.

PS/2 keyboard interface (X301) for MF2 keyboard

Connector designation:	**X301**
Connector type:	6-pole mini-DIN socket

Table 23-3 X301 pin assignments

Pin	Signal name	Signal mode	Signal type
1	KDATA	Keyboard Data	I
2	N.C.	Not connected	
3	1M	Ground	VO
4	1P5	+5 V (power supply)	
5	KCLK	Keyboard Clock	O
6	NC	Not connected	

Signal type

I: **I**nput
O : **O**utput
VO: **V**oltage **O**utput

Release interface cover:

1. Release the cover by pressing in the catch.
2. Pull off the cover from the two recesses.
3. Put the cover for the assembly on the HT 6 and allow it to click in place by pressing down carefully.

PC memory card interface (X401)

Connector designation:	**X401**
Connector type:	68-pole PC card connector

Table 23-4 X401 pin assignments

Pin	Signal name	Signal type		Pin	Signal name	Signal type
1	1M	V0		35	1M	VO
2	D3	B		36	XCARDDET	O
3	D4			37	D11	B
4	D5			38	D12	
5	D6			39	D13	
6	D7			40	D14	
7	XCSCARDF	O		41	D15	
8	A10			42	XCSCARDF	O
9	XOEP			43	N.C.	
10	O11			44	N.C.	
11	A9			45	N.C.	
12	A8			46	A17	O
13	A13			47	A18	
14	A14			48	A19	
15	XWEP			49	A20	
16	N.C.			50	O21	
17	1P5	VO		51	1P5	VO
18	VPP			52	VPP	
19	A16	O		53	A22	O
20	A15			54	A23	
21	A12			55	A24	
22	A7			56	A25	
23	A6			57	N.C.	
24	A5			58	RESET	O
25	A4			59	N.C.	
26	A3			60	N.C.	
27	A2			61	XREG	O
28	A1			62	N.C.	
29	1M	VO		63	N.C.	
30	D0	B		64	D8	B
31	D1			65	D9	
32	D2			66	D10	
33	N.C.			67	N.C.	
34	1M	VO		68	1M	VO

Explanation

A0, ..., A25:	**A**ddress 0, ..., 25
D0, ..., D15:	**D**ata O, ..., 15
B:	**B**idirectional
O :	**O**utput
VO:	**V**oltage Output

Release interface cover:

1. Release the cover by pressing in the catch.
2. Pull off the cover from the two recesses.
3. Put the cover for the assembly on the HT 6 and allow it to click in place by pressing down carefully.

RESET button

The HT 6 can be booted up again using the RESET button.

The RESET button is accessible via an opening under the interface cover by means of a screwdriver.

Release interface cover:

1. Release the cover by pressing in the catch.
2. Pull off the cover from the two recesses.
3. Put the cover for the assembly on the HT 6 and allow it to click in place by pressing down carefully.

Additional references

The following manuals are available for the handheld terminal (HT 6):

References:	/BAH/	Operating Instructions HT 6
	/IAM IM2/	Chapter: "Start-Up of the HT 6"
	/PJE/	HMI Embedded Configuring Package
	/IAM BE1/	Expanding the Operator Interface.

Note

The IP 54 degree of protection is only ensured when the interface covers and the RS-232-C covers are closed.

23.4 Connectors

The following components and cables are necessary for connection:

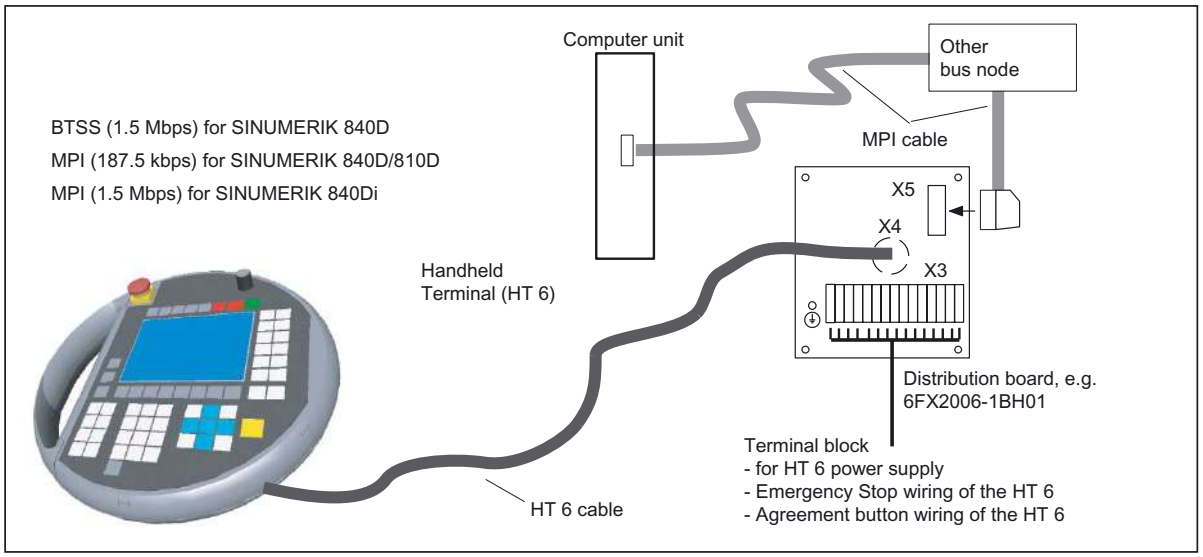

Figure 23-4 Connection diagram for handheld terminal HT 6

The handheld terminal must be connected to the MPI bus as the final node.
The bus terminating resistors are integrated in the device.

Note

The HT6 cannot be connected using the MPI cable 6FX2002-4EA04-... because the bus terminators are integral components of this cable.
Please use the MPI cable specified in the catalog.

References:/Z/ Catalog NCZ

Table 23-5 HT 6 cable

MLFB	Note	suitable**distributor**
6FX2002...–1AA83–1__0	3-wire enabling cable	6FX2006–1BC01
6FX2002...–1AA23–1__0	4-wire enabling cable	6FX2006–1BH01

Table 23-6 Examples (available by the meter, max. 40 m):

6FX2002–1AA83–1BA0	10 m
6FX2002–1AA23–1CA0	20 m

Note

Distributor 6FX2006-1BF00 cannot be used.

⚠ CAUTION

An EMERGENCY STOP is triggered if the connection between the HT 6 and the distributor box is interrupted (e.g. the HT 6 cable was unplugged). EMERGENCY STOP overriding does not take place automatically (see Section: "Connecting/disconnecting during operation").

23.5 Unplugging/plugging during operation

Trouble-free disconnection and connection of the HT 6 during machine operation requires the following:

- Release or override of the HT 6 EMERGENCY STOP
- Connection of the HT 6 to the OPI/MPI via a PROFIBUS repeater.

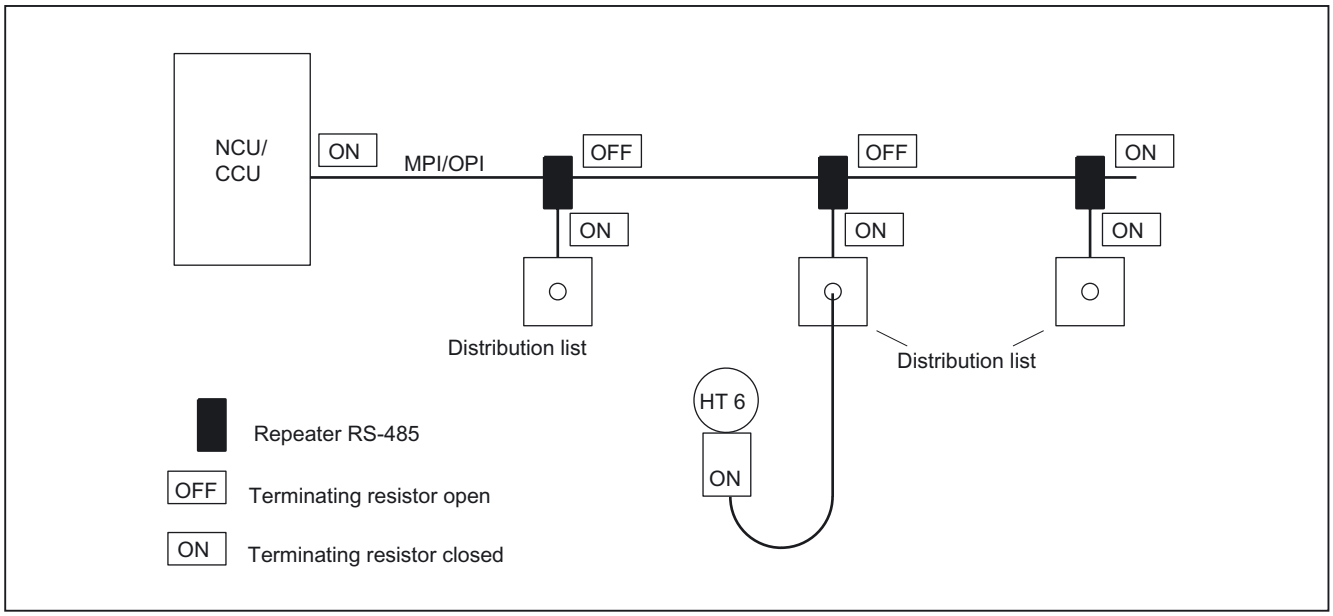

Figure 23-5 Connecting the HT 6 using a PROFIBUS repeater

A PROFIBUS repeater must be connected upstream of the HT 6 distributor box for each branch. The individual bus segments (MPI/OPI cable and/or the local segments between repeater and HT 6) must be terminated with connector resistors at the ends of the bus.

Repeater RS-485

The repeater can be ordered under Order No. 6ES7972-0AA01-0XA0.
For further information please refer to the Catalog: /IK10/ Industrial Communication Networks SIMATIC-NET

Note

The HT 6 already has an installed bus terminating resistor.

The cable length from the repeater to the distributor box must not exceed 2 m.

Cable lengths for MPI/OPI, see /IAD/ Start-Up Guide 840D or /IAC/ Start-Up Guide 810D, Chapter 3.

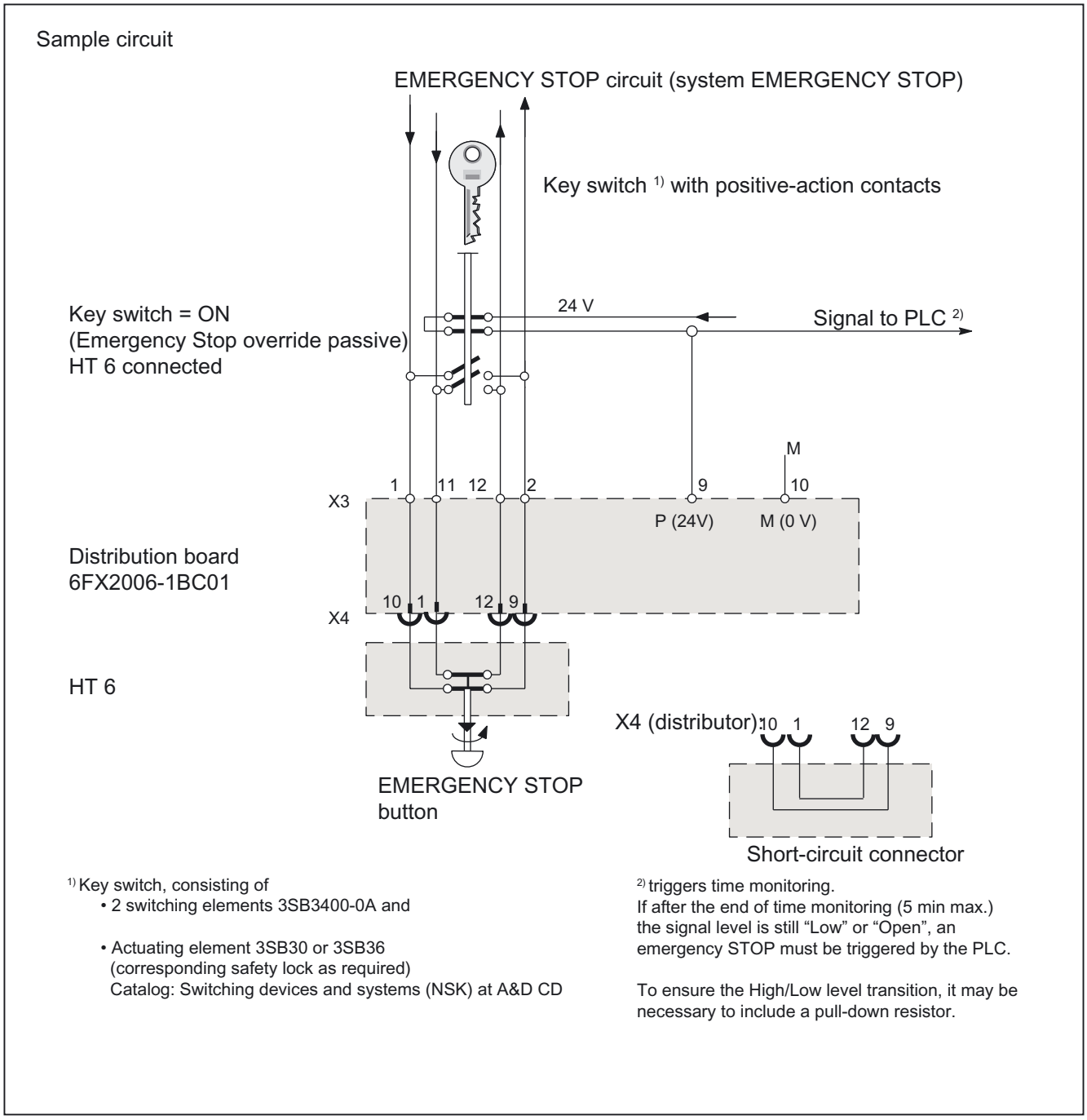

Figure 23-6 Distributor 6FX2006-1BC01: Circuit proposal for EMERGENCY STOP bridging (the "keyswitch =ON" status is indicated when the HT6 is plugged in)

Note

Please note that the customer is responsible for implementing the circuit recommendations.

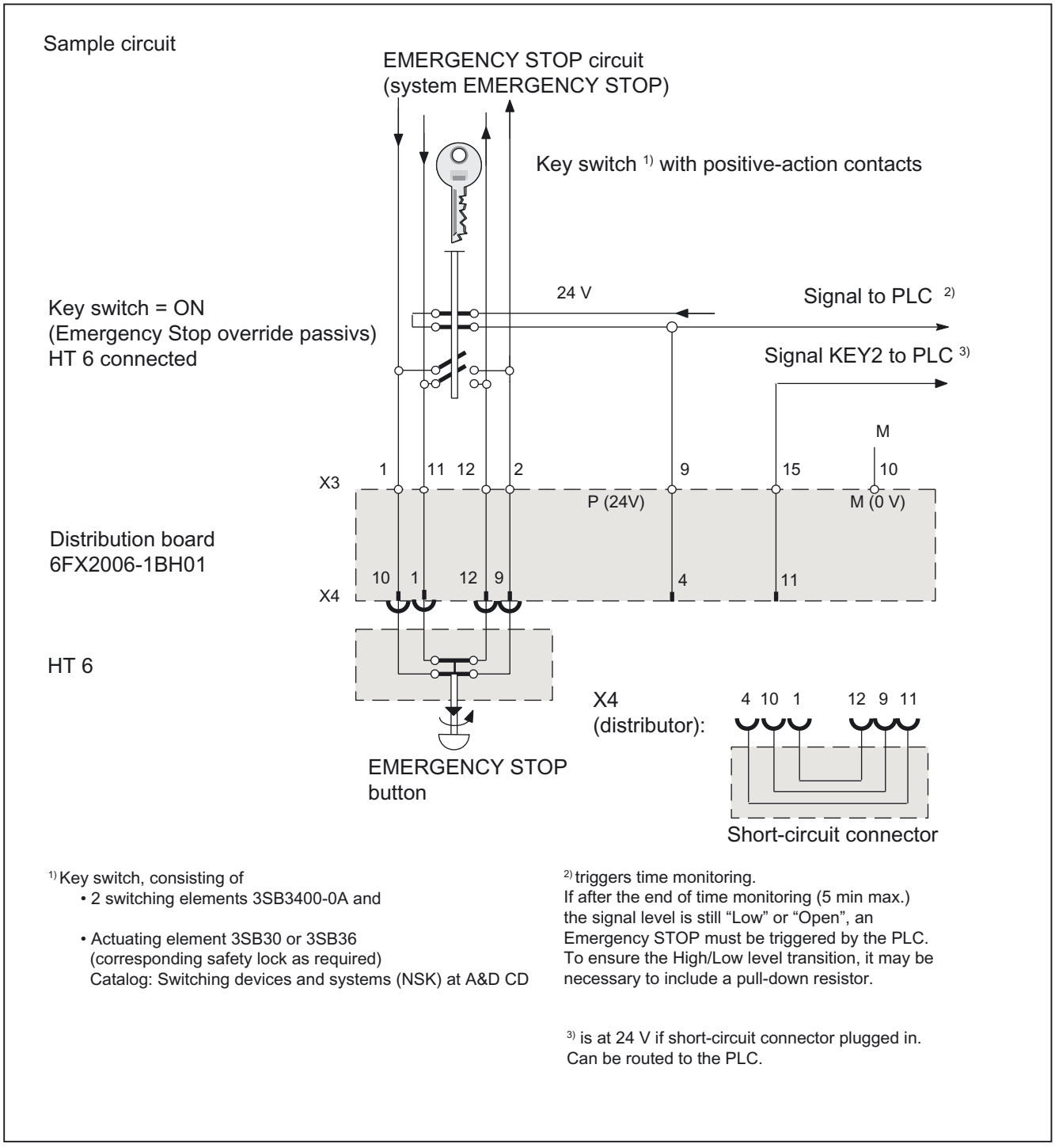

1) Key switch, consisting of
- 2 switching elements 3SB3400-0A and
- Actuating element 3SB30 or 3SB36
  (corresponding safety lock as required)
  Catalog: Switching devices and systems (NSK) at A&D CD

2) triggers time monitoring.
If after the end of time monitoring (5 min max.) the signal level is still “Low” or “Open”, an Emergency STOP must be triggered by the PLC. To ensure the High/Low level transition, it may be necessary to include a pull-down resistor.

3) is at 24 V if short-circuit connector plugged in. Can be routed to the PLC.

Figure 23-7 Distributor 6FX2006-1BH01: Circuit proposal for EMERGENCY STOP bridging (the "keyswitch =ON" status is indicated when the HT6 is plugged in)

Note

Please note that the customer is responsible for implementing the circuit recommendations.

Disconnecting the HT 6

Keyswitch is set to "ON" position, HT 6 connection at distributor is active (incl. EMERGENCY STOP).

1. Override the EMERGENCY STOP circuits of the HT 6 using the keyswitch.
2. This connects the HT 6 supply voltage and the signal to the PLC to the LOW signal level (provide a pull-down resistor if necessary). This HIGH-LOW transition starts a timer in the PLC, which opens the EMERGENCY STOP circuit via the relevant PLC outputs and series-connected relays after the changeover period (approx. 5 min) if the keyswitch is not reset to its initial position within this period.
3. The HT 6 must be removed within the changeover period and the EMERGENCY STOP circuit overridden using a short-circuit connector.

Connecting the HT 6

Changeover from short-circuit connector to HT 6 connection is carried out in reverse order.

⚠ DANGER

EMERGENCY STOP buttons that are inactive

• may not be recognizable as such

• may not be accessible

This is to prevent the EMERGENCY STOP button from being used inadvertently.

23.6 Commissioning

23.6.1 Standard configuration (without MCP)

Note

Interface parameters are configured using the IK Screen Kit.

References:/FBPH/, Configuring HT 6 Operator Interface
IK, installation package: Software Update and Configuration

Standard setting

For the default setting of the HT 6, the FB1 call in DB100 available on the basic program diskette (tool box) must be used.
This call applies to the first MCP or the HT 6.

This setting corresponds to the hardware of the HT 6 when supplied.
The default setting is: • MPI address: 14

Parameterization of the PLC basic program (FB1)

The parameter settings in FB1 for the HT 6 correspond to those of the first MCP:

MCPNum:=1 // One HT 6

MCPIn:=P#E0.0// HT 6 input signals

MCPOut:=P#A0.0// HT 6 output signals

MCPStatRec:=P#A12.0// Status double word

MCPStatSend:=P#A8.0//

MCPMPI:=TRUE//

MCP1BusAdr:=14//

PLC SW

Please note the following when using SW 05.03.04 (for 840D) or SW 03.03.04 (for 810D):
During power-up of the OB 100 you must set:

DB8.DBB2=0, if HT 6 is configured as the first MCP,
DB8.DBB64=0, if HT 6 is configured as the second MCP.

This is not necessary with any of the higher SW versions.

23.6.2 Interface signals

MCP simulation is available for the HT 6. MCP simulation of the HT 6 must be parameterized with the function block FB1 as MCP, to enable the basic PLC program to monitor the HT 6 for failure.

Input signals

The parameter setting for the start address n is set in the PLC user program (FB1).

Byte	Bit7	Bit6	Bit5	Bit4	Bit3	Bit2	Bit1	Bit0
EBn	Function key block							
	(REF)	TEACH	AUTO	(MDA)	JOG	QUIT	RESET	(WCS/MCS)
EBn+1	Function key block							
	Control Panel Function	U4	U3	reserved	U2	U1	(INC)	(REPOS)
IBn+2	JOG keys positive direction							
	reserved (AXSEL1)	AXSEL0	JOG6+	JOG5+	JOG4+	JOG3+	JOG2+	JOG6+
IBn+3	JOG keys negative direction							
	reserved	reserved	JOG6-	JOG5-	JOG4-	JOG3-	JOG2-	JOG1-
IBn+4	reserved							
IBn+5	reserved	U8	U7	U6	U5	Step	reserved	reserved
EBn+6	Start key block							
	reserved (HW1) *	(HW0) *	reserved	reserved	SF2	SF1	START	STOP *
EBn+7	Feed override							
				E*	D*	C*	B*	A*

Figure 23-8 HT 6 interface → PLC

Note:

- Signals on light gray background are evaluated by the basic PLC program (FC26).
- Signals on dark gray background are evaluated in FC26 from SW 6.1.
- Signals shown in () brackets do not exist, but are emulated by the software (e.g. with a softkey).
- Transfer of the signals to the PLC can be inhibited in the software, except for those signals marked with *.
- Use of keys U1 to U8 and S1, S2 and their inputs can be customized by the PLC user.

Output signals

The parameter setting for the start address n is set in the PLC user program (FB1).

Byte	Bit7	Bit6	Bit5	Bit4	Bit3	Bit2	Bit1	Bit0
QBn								WCS/MCS
QBn+1								
QBn+2	Traversing keys, axis system							
	(reserved)	AXSEL0						
QBn+3								
QBn+4								
QBn+5								
QBn+6								
QBn+7								

Figure 23-9 PLC → HT 6 interface

Note:

- Signals are evaluated by the HT 6 status display.
- Signals on a gray background are supplied by the basic PLC program (FC26).
- The other signals may need to be supplied by the user program.

FC 26 exists analogous to PLC functions FC 19 and FC 25. It is described in

References: /FB/ P3, basic PLC program

Machine data that specify the coding of compensation values must be set as follows:

- MD 12000: OVR_AX_IS_GRAY_CODE = 1
- MD 12020: OVR_FEED_IS_GRAY_CODE = 1
- MD 12040: OVR_RAPID_IS_GRAY_CODE = 1
- MD 12060: OVR_SPIND_IS_GRAY_CODE = 1.

Signals not supported

As standard, the following signals cannot be influenced by means of MCP emulation; they are initialized on control power-up:

- Keyswitch to position 0
- Spindle speed override to 0
- Rapid traverse overlay to 0

The only parameters for FC 26 are "BAGNo" and "ChanNo". That is why the information that is normally transmitted to the caller via the parameters "FeedHold" and "SpindleHold" has to be calculated by the user.

23.7 Distributor for handheld unit

23.7.1 Overview

Distributors and HT 6

The handheld terminal is connected to a distributor. The distributor has an interface to the MPI bus and a terminal block for connecting the EMERGENCY STOP circuit, enabling button circuit, 24 V power supply and an equipotential bonding connection.

The following are suggested for the connections

- Distributor (Order No. 6FX2006-1BC01)
  for 3-core enabling cable (Order No. 6FX2002-1AA83)
- Distributor (Order No. 6FX2006-1BH01)
  for 4-core enabling cable (Order No. 6FX2002-1AA23)

EMC measures

To ensure that the drained currents do not become a source of interference in their own right, compliance with the following points is essential:

- Use a stranded reference potential conductor (of up to 30cm in length and at least 10 mm^2 cross-section).
- Securely tighten all retaining screws of cable connectors, modules and cables referred to a potential.
- Make sure that all contacting areas of cables referred to a potential are protected against corrosion.
- In order to avoid capacitive charges on unused cable cores, the unused cores of the EMERGENCY STOP and enabling buttons (terminals NAUS1.1, NAUS1.2, NAUS2.1, NAUS2.2, ZS1, ZS2, ZUSTICO) must be connected to the equipotential bonding terminal.

23.7.2 Distributor for 3-core enabling cable (Order No. 6FX2006–1BC01)

Location of interfaces and terminal blocks

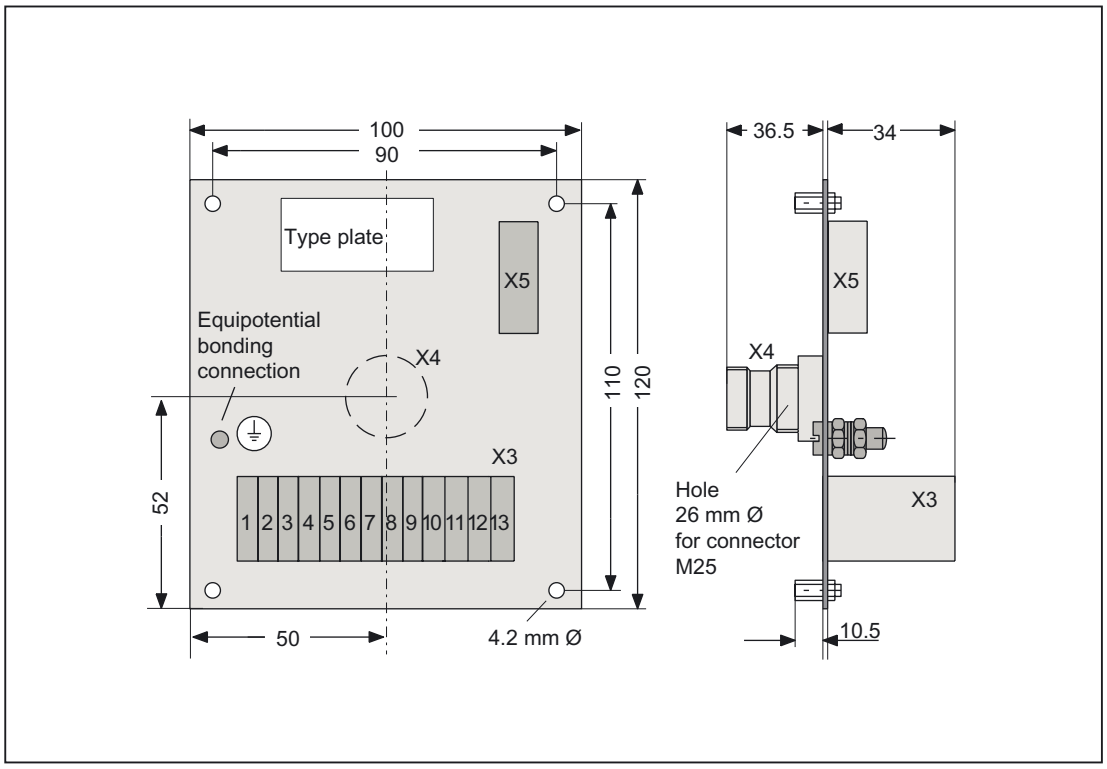

Figure 23-10 Distributor 6FX2006-1BC01: Location of interfaces and terminal blocks

24 V supply for the HT 6

The 24 V supply is connected to terminal block X3 (see figure below):

Terminal 9	Ub
Terminal 10	GND

Connecting the HT 6

The HT 6 is connected to the X4 screw terminal on the distributor by means of the HT 6 cable.

Note

When drilling a hole (e.g. into a housing) for the X4 screw terminal, the requirements of degree of protection IP54 must be complied with.

Connection to MPI bus

The distributor is connected to the appropriate interface via MPI bus terminal X5, e.g. on the MPI bus.

EMERGENCY STOP button connections

The EMERGENCY STOP button is connected to the terminal block X3 (see figure below).

Terminal	Assignment	
1 / 2	EMERGENCY STOP contact 1	Input / output
11 / 12	EMERGENCY STOP contact 2	Input / output

Connection of the enabling button (3-core)

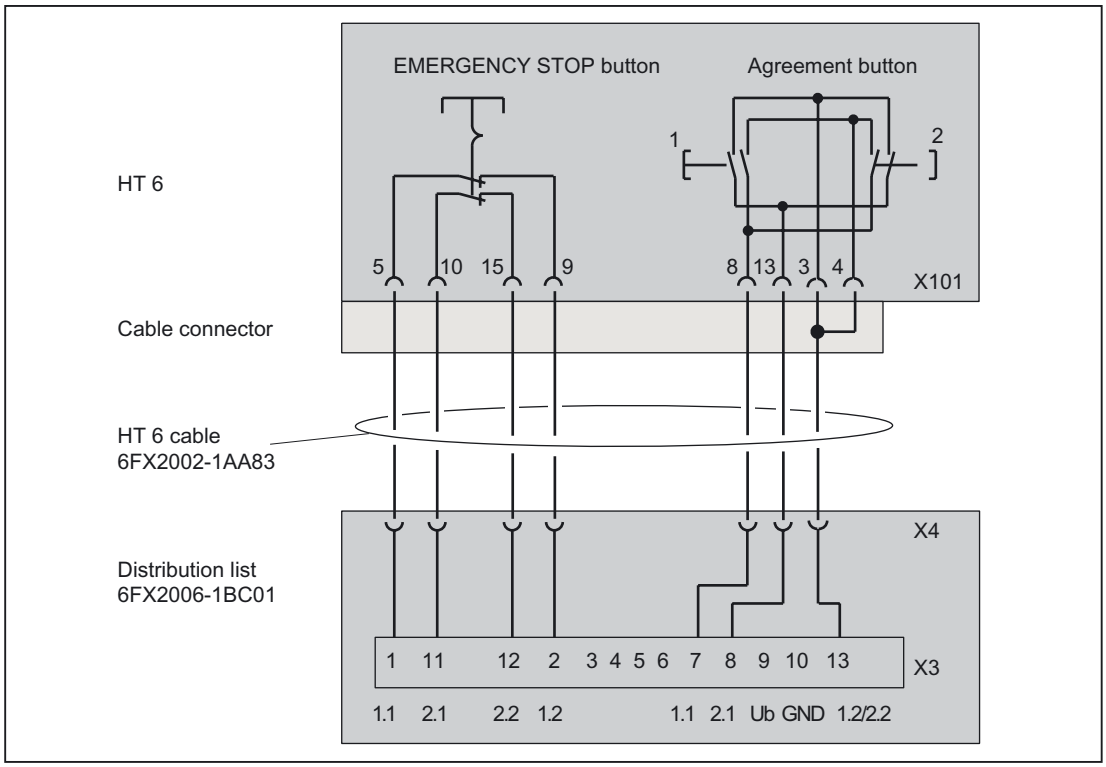

Figure 23-11 Distributor 6FX2006-1BC01: Connection to the HT 6

Terminal block X3

Connector designation: **X3**
Connector type: Terminal block for 1.5 mm^2

Table 23-7 Distributor 6FX2006-1BC01: X 3 pin assignments for terminal block

Pin	Signal name	Signal mode	Signal type
1	NA1.1	EMERGENCY STOP button 1.1 (24 V, 1 A)	I
2	NA1.2	EMERGENCY STOP button 1.2 (24 V, 1 A)	O
3, ..., 6	NC	Not connected	
7	ZS1.1	Enabling button (24 V, 1 A)	O
8	ZS2.1	Enabling button (24 V, 1 A)	
9	Ub	24 V (power supply for HT 6)	I
10	GND	M (M_{ext} for HT 6)	
11	NA2.1	EMERGENCY STOP button 2.1 (24 V, 1 A)	
12	NA2.2	EMERGENCY STOP button 2.2 (24 V, 1 A)	O
13	ZS1.2/ZS2.2	Enabling button (24 V, 1 A)	I

HT 6 interface (X4)

Connector designation: **X4**
Connector type: Round connector for screw connection
Special feature: Interface must comply with IP54

Table 23-8 Distributor 6FX2006-1BC01: Pin assignment of connector X4

Pin	Signal name	Signal mode	Signal type
1	NA2.1	EMERGENCY STOP button (24 V, 1 A)	I
2	MPI_A		
3	GND	M (M_{ext} for HT 6)	I
4	Ub	24 V (power supply for HT 6)	
5	ZS1.1	Enabling button (24 V, 1 A)	O
6	ZS1.2/ZS2.2	Enabling button (24 V, 1 A)	I
7, 8	NC	Not connected	
9	NA1.2	EMERGENCY STOP button (24 V, 1 A)	O
10	NA1.1	EMERGENCY STOP button (24 V, 1 A)	I
11	NC	Not connected	
12	NA2.2	EMERGENCY STOP button (24 V, 1 A)	O
13	MPI_B		
14	ZS2.1	Enabling button (24 V, 1 A)	O
15, ..., 17	NC	Not connected	

MPI interface (X5)

Connector designation:	**X5**
Connector type:	9-pole sub-D socket
Max. cable length	200 m at 1.5 Mbaud

Table 23-9 Distributor 6FX2006-1BC01: Pin assignment of connector X5

Pin	Signal name	Signal mode	Signal type
3	MPI_B		B
8	MPI_A		

Connection of equipotential bonding

Equipotential bonding has to be made using a low-resistance connection between the distributor and the ground potential.

23.7.3 Distributor box for 4-core enabling cable (order no. 6FX2006–1BH01)

Location of interfaces and terminal blocks

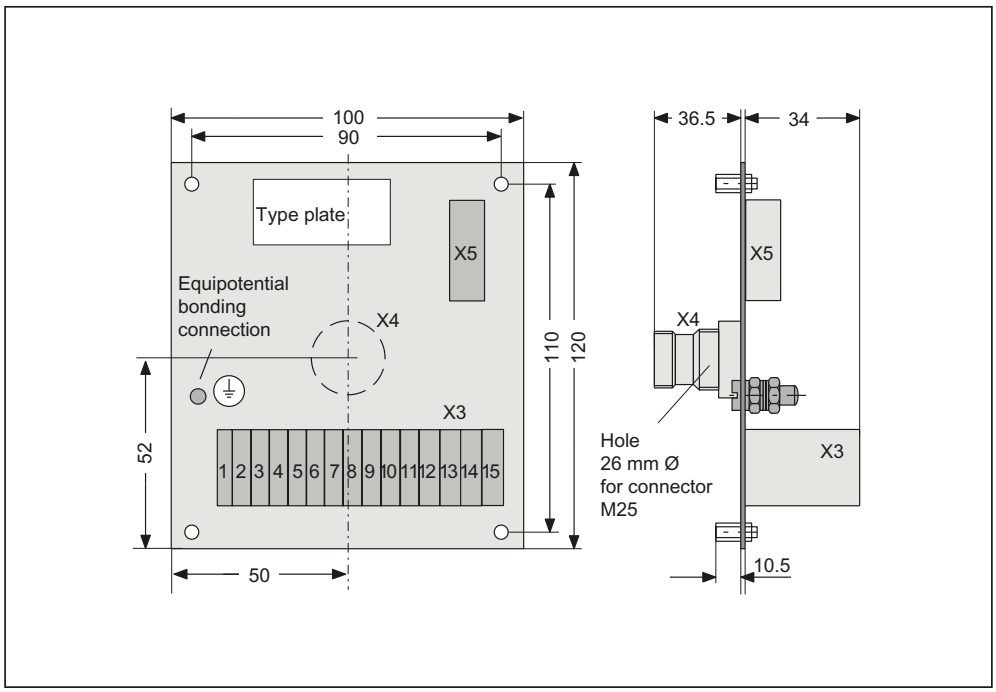

Figure 23-12 Distributor 6FX2006-1BH01: Location of interfaces and terminal blocks

24 V supply for the HT 6

The 24 V power supply is connected to terminal block X3.

Terminal 9	Ub
Terminal 10	GND

Connecting the HT 6

The HT 6 is connected to the X4 screw connection on the distributor by means of the HT 6 cable.

Note

When drilling a hole (e.g. into a housing) for the X4 screw terminal, the requirements of degree of protection IP54 must be complied with.

Connection to MPI bus

The distributor is connected to the appropriate interface via MPI bus terminal X5, e.g. on the MPI bus.

EMERGENCY STOP button connections

The EMER STOP button is connected to the terminal block X3 (see figure below).

Terminal	Assignment	
1 / 2	EMERGENCY STOP contact 1	Input / output
11 / 12	EMERGENCY STOP contact 2	Input / output

Connection of the enabling button (4-core)

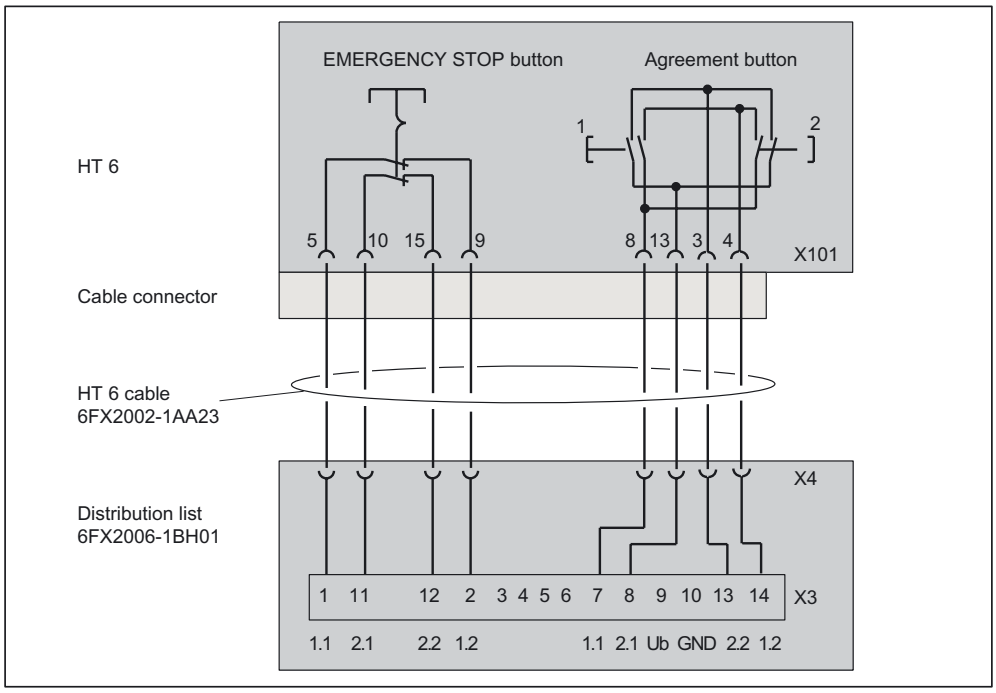

Figure 23-13 Distributor 6FX2006-1BH01: Connection to the HT 6

Terminal block X3

Connector designation:	**X3**
Connector type:	Terminal block for 1.5 mm²

Table 23-10 Distributor 6FX2006-1BH01: X 3 pin assignments for terminal block

Pin	Signal name	Signal mode	Signal type
1	NA1.1	EMERGENCY STOP button (24 V, 1 A)	I
2	NA1.2	EMERGENCY STOP button (24 V, 1 A)	O
3, ..., 6	N.C.	Not connected	
7	ZS1.1	Enabling button (24 V, 1 A)	O
8	ZS2.1	Enabling button (24 V, 1 A)	
9	Ub	24 V (power supply for HT 6)	I
10	GND	M (M_{ext} for HT 6)	
11	NA2.1	EMERGENCY STOP button (24 V, 1 A)	
12	NA2.2	EMERGENCY STOP button (24 V, 1 A)	O
13	ZS1.2	Enabling button (24 V, 1 A)	I
14	ZS2.2	Enabling button (24 V, 1 A)	
15	KEY2	Indicator showing whether shorting plug is connected, If yes → 24V	

HT 6 interface (X4)

Connector designation:	**X4**
Connector type:	Round connector for screw connection
Special feature:	Interface must comply with IP54

Table 23-11 Distributor 6FX2006-1BH01: Assignment of connector X4

Pin	Signal name	Signal mode	Signal type
1	NA2.1	EMERGENCY STOP button (24 V, 1 A)	I
2	MPI_A		B
3	GND	M (M_{ext} for HT 6)	I
4	Ub	24 V (power supply for HT 6)	
5	ZS1.1	Enabling button (24 V, 1 A)	O
6	ZS2.2	Enabling button (24 V, 1 A)	I
7, 8	N.C.	Not connected	
9	NA1.2	EMERGENCY STOP button (24 V, 1 A)	O
10	NA1.1	EMERGENCY STOP button (24 V, 1 A)	I
11	KEY2	Indicator showing whether jump plug is connected, If yes → 24V	O
12	NA2.2	EMERGENCY STOP button (24 V, 1 A)	O
13	MPI_B		B
14	ZS2.1	Enabling button (24 V, 1 A)	O
15	N.C.	Not connected	
16	ZS1.2	Enabling button (24 V, 1 A)	
17	HR_B	Not connected	

MPI interface (X5)

Connector designation:	**X5**
Connector type:	9-pin Sub-D socket connector
Max. cable length	200 m at 1.5 Mbaud

Table 23-12 Distributor 6FX2006-1BH01: Assignment of connector X5

Pin	Signal name	Signal mode	Signal type
3	MPI_B		B
8	MPI_A		

Connection of equipotential

Equipotential bonding has to be made using a low-resistance connection between the distributor and the ground potential.

23.8 Technical specifications

Security			
Safety class	III; PELV acc. to EN 50178		
Degree of protection per EN 60529	IP54		
Approvals	CE / cULus		
Electrical specifications			
Input voltage	DC 24 V (via HT 6 cable)		
Current, typ.	500 mA	Emergency stop/enabling button: 1A	
Power consumption, max.	12 W		
Mechanical data			
Dimensions (mm)	Diameter: approx. 290	Depth:	53
			70 (incl. override)
Weight	1.5 kg		
Mechanical ambient conditions	**Operation**	**Transport** (in transport packaging)	
Vibratory load	10 -58 Hz: 0.075 mm 58 -200 Hz: 9.8 m/s^2 3M4 per EN 60721-3-3	5 -9 Hz: 3.5 mm 9 -200 Hz: 9.8 m/s^2 2M2 per EN 60721-3-2	
Shock stressing	50 m/s^2, 30 ms, 18 shocks 3M2 per EN 60721-3-3	300 m/s^2, 6 ms, 18 shocks 2M2 to EN 60721-3-2	
Climatic ambient conditions			
Cooling	By natural convection		
Condensation, spraying water and icing	Not permitted		
Supply air	Without caustic gases, dusts and oils		
	Operation	**Storage/shipping** (in transport packaging)	
Applicable standards	EN 60721-3-3	EN 60721-3-1 / -3-2	
Climate class	3K5	1K3 / 2K4	
Temperature limits	0 ... 45 ºC	-20 ... 60ºC	
Temperature change	Max. 10 K/h	Max. 18 K/h	
Limits for relative humidity	5 ... 80%	5 ... 95%	
Permissible change in the relative air humidity	max. 0.1 % /min		
Display			
Size	5.7 " STN		
Resolution	320 x 240 pixels		
Service life	For ambient temperatures > 40 ºC and long periods of non-use it is recommended that you switch on the screen saver function (via the machine data display DISPLAY_BLACK_TIME).		

23.9 Replacement parts

23.9.1 Overview

The following spare parts are available for the HT 6:

Table 23-13 Spare parts for HT 6

Description	Order No.:	Note
Front with keyboard	6FC5448–0AA10–0AA0	
EMERGENCY STOP button and rotary override switch	6FC5447–0AA10–0AA0	Kit contains both spare parts

⚠ WARNING

Spare parts must always be replaced by properly trained personnel!

Hazard due to unwanted movements of the machine!
We therefore strongly recommend a function test after spare part replacement.

23.9.2 Replacement

23.9.2.1 Front with keyboard

Replace the front with keyboard as described in Section: "Accessories" → "Slide-in labels" → "Replacement".



Figure 23-14 Front with keyboard

Note

The inner protective film on the front face must be pulled off before the new front with keyboard is installed.

23.9.2.2 Emergency stop button and rotary override switch

CAUTION
• Ensure that your workspace is ESD-protected! • Use EMC clothing! • Protect the display and protective screen from being scratched!

You will find the reference diagrams for the individual work steps at the end of the description of the procedure.

Removal

1. Remove the front with keyboard (see Section: "Accessories" → "Slide-in labels" → "Replacement" as in point 1 through 3).
2. Remove the lower part of the housing by removing the 8 housing screws and carefully swing it up.
   One of the screws is located under the cover of the connecting cable **(A)**. This cover (secured with 2 screws) must therefore be removed beforehand.
3. Disconnect the connectors on the two cables which are still connecting the housing parts (EMERGENCY STOP and MPI connecting cable) and put the housing base to one side.
4. Remove the EMERGENCY STOP button by unscrewing the threaded ring, either manually or with a wrench (supplied by Rafi, Order No. 5.58002.019) and pull the switch out downwards.
5. Remove the override connector and backlight inverter connector from the board.
6. Remove the clamping frame of the LCD ribbon cable and carefully pull it out to the side **(C)**.
7. Undo the 8 fixing screws in the board.
8. Pull the board carefully upwards off the housing lid and turn the lid over.
   Important: Protect the plug connectors on the rear against damage!
9. Unscrew the nut securing the rotary override switch (12 mm wrench width) and pull the switch out downwards.

Reference diagrams

(A)

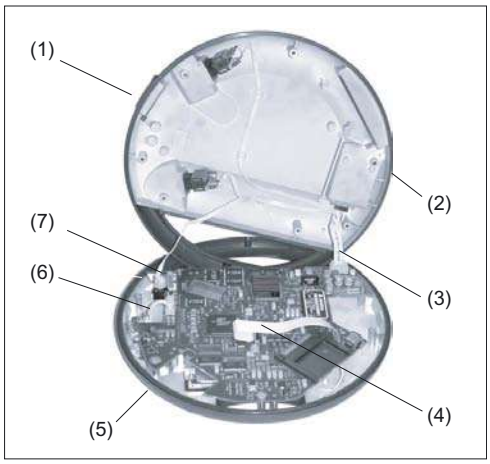

Figure 23-15 HT 6 after housing has been unscrewed and opened

(1) Housing base
(2) Cover of the connecting cable (rear side)
(3) MPI connecting cable
(4) LCD interface cable
(5) Housing lid
(6) Override cable
(7) EMERGENCY STOP cable

(B)

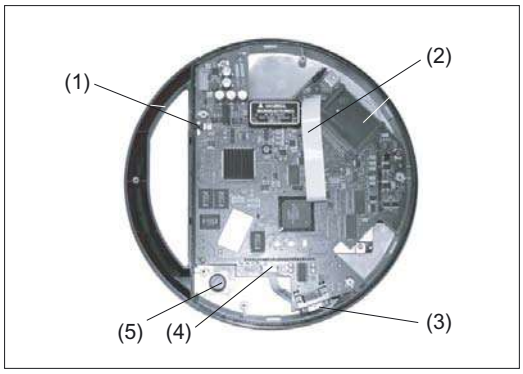

Figure 23-16 Rear view of housing lid after housing base has been removed

(1) Backlight inverter connector
(2) LCD ribbon cable
(3) Override rotary switch (covered)
(4) Override connector
(5) emergency stop push button

(C)

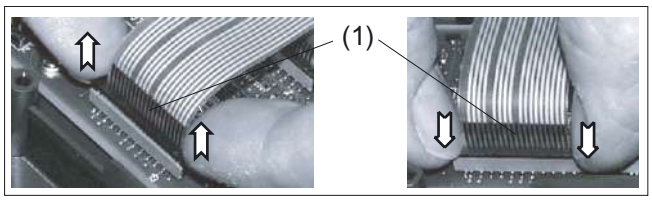

Figure 23-17 Removing (left) and attaching (right) a membrane connector (as in the OP 012 example)

(1) Clamping frame of socket

(D)

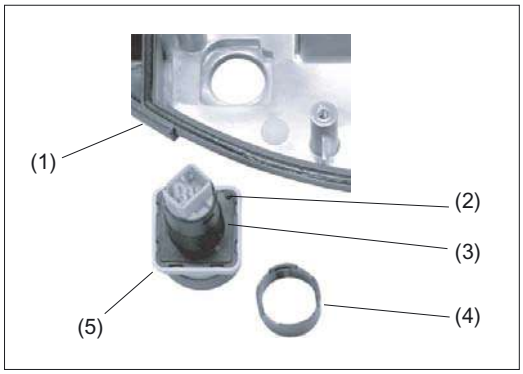

Figure 23-18 Dismantled EMERGENCY STOP switch

(1) Positioning pin
(2) Flat gasket
(3) Threaded ring
(4) emergency stop push button
(5) Rear face of housing lid

(E)



Figure 23-19 Dismantled rotary override switch

(1) Sealing ring
(2) Lock nut (wrench size 12)

Mounting

Install the unit by following the same procedure in the reverse order, but note the following points:

Emergency stop push button

- Hole in flat gasket must be centered on the positioning pin.
- Positioning pin must latch into hole in housing.
- Torque for threaded ring: 0.8 Nm

Rotary override switch

- Make sure that the sealing ring is seated correctly.
- When being installed, the cable must show in the direction of the housing and it must be folded in such a manner that it remains inside the housing seal.
- Torque for lock nut: 0.7 Nm

Board

- Prior to installation, the backlight inverter cable must be connected and the ribbon cable must be threaded through the slit in the board.
- Place the board in position vertically, making sure that you do not bend the plug connectors.
- Tighten the board fastening screws (torque: 0.8 Nm).
- Connect the cable again (carefully insert the ribbon cable as far as the stop, then secure it using the clamping frame).

Front with keyboard

- Install as described in Section: "Accessories" → "Slide-in labels" → "Replacement".
- Push the override knob (in zero position) onto the axis and tighten the screws.
- Fit the cover to the override knob.

Casing

- Place base on lid, making sure that seal is correctly seated.
- Screw together with a torque of 0.8 Nm

23.10 Accessories

23.10.1 Overview

The following accessories are available for the HT 6:

Description	Order No.:	Note
Distributor incl. shorting plug	6FX2 006–1BH01	for 4-core enabling
Connecting cable for distributor 6FX2006–1BC01	6FX2 002–1AA83–1__0	for 3-core enabling, length max. 40 m
Connecting cable for distributor 6FX2006–1BH01	6FX2 002–1AA23–1__0	for 4-core enabling, length max. 40 m
Slide-in labels	(included in the HT 6 delivery)	for self-labeling

23.10.2 Slide-in labels

23.10.2.1 replacement

For the HT 6, the traversing and function keys U1, ..., U8 can be labeled by the user as desired (see Section: "Control and display elements" --> "View").

The labeling strips can be replaced after the HT 6 front with keyboard has been disassembled (Fig. , right).

Note

The dismounted front with keyboard must be totally protected from soiling, otherwise the readability of the display and key labels can be permanently affected.

If the inner face becomes dirty, any dirt must be carefully removed using an Isopropanol cleansing agent or a cellulose cloth soaked in Isopropanol.

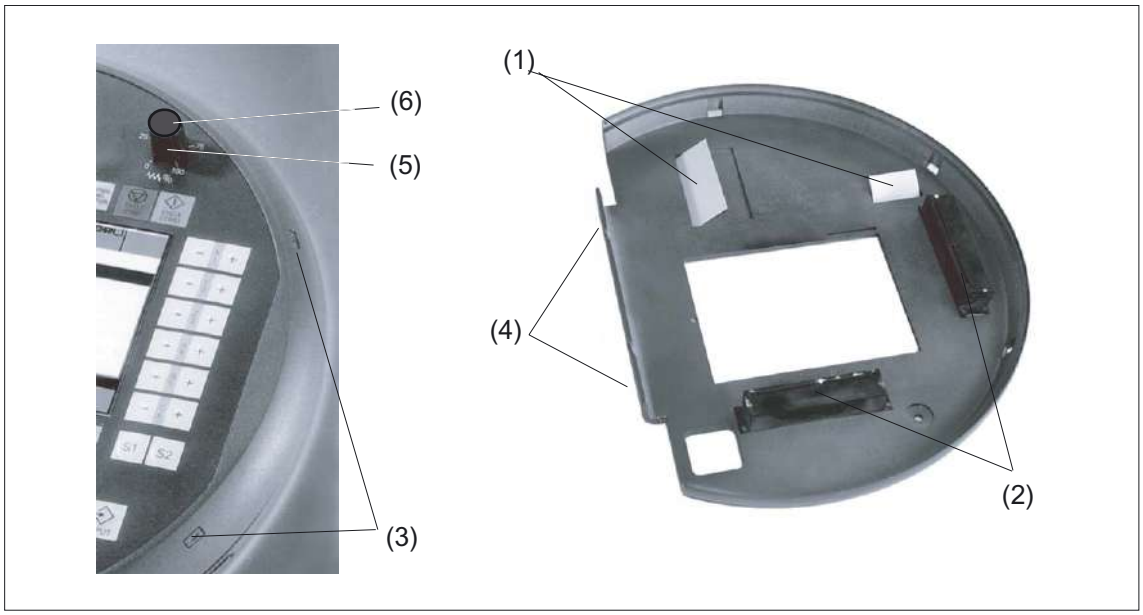

Figure 23-20 Changing the slide-in labels

(1) Film labels
(2) Flat connector
(3) Clamping lugs (2 of 4)
(4) Grooves for levering off the front with keyboard
(5) Knob of rotary override switch
(6) Cover

Procedure - dismantling

1. Remove the knob of the rotary override switch **(5)** in zero position.
2. Lever the cover off **(6)** using a flat tool (screwdriver) and remove the expanding screw.
3. Pull the button from the shaft.
4. Press in the four clamping lugs **(3)** and lever the front with keyboard off by inserting a screwdriver into the grooves**(4)** in the handhold opening.
5. Carefully pull out the flat connector **(2)** vertically.
6. Turn the front with keyboard around and pull out the labeling film **(1)**, if present.
7. Guide in the new labeling strip.
8. When replacing the front with keyboard, plug in the flat connector **(2)** vertically taking care not to bend the protruding pins in the base and allow the cover to latch in place by applying gentle pressure.

Procedure - Mounting

Install the override button in reverse order.

- Put the override button on with the pointer in the zero position.
- Tighten it with the expanding screw.
- Put the cover on.

23.10.2.2 Labeling

You can also use your own self-labeled label strips made of normal paper (80 g/m2).

The dimensions (in mm) can be obtained from the figure. The crosses indicate the center of the text or symbol.

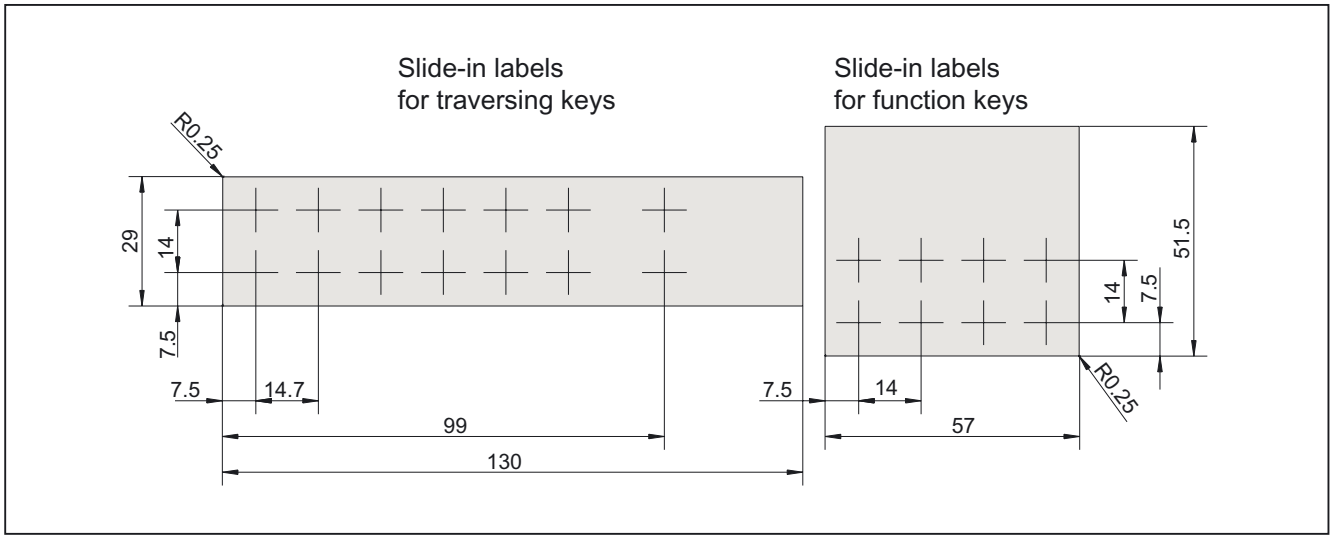

Figure 23-21 Dimensional drawing for labeling the slide-in labels

Handheld Terminal HT 8

24

24.1 Description

The SINUMERIK HT 8 is an handheld operating and programming device that combines the functions of an operator panel front and a machine control panel. It allows direct system and machine operation from any location and works according to the Thin Client principle (mobile Thin Client, see Section: "Thin Client Unit").

The HT 8 has a 7.5" TFT color display and is operated via a touch screen and membrane keys. It is equipped with an EMERGENCY STOP button and two 3-stage enabling buttons for left and right-handed people.
Its safety concept allows working in the danger zone of the machine, which is needed for teaching.

The HT 8 is connected to the terminal box Plus PN Hot plug-capable. This allows trouble-free connecting and disconnecting of the connector during operation, without triggering an emergency stop.

The HT 8 can be safely kept and operated in a stationary manner in the wall holder.
The wall holder is available as an accessory (s. Chapter: "Accessories").

The HT 8 is available in two variants:

- with enabling button, emergency stop button, override rotary switch
- with enabling button, emergency stop button, rotary override switch and handwheel (available soon)

Validity

The following description applies to the following components:

Description	Characteristics	Order No.:
HT 8	Enabling button, emergency stop button, override rotary switch	6FC5403-0AA20-0AA0

Function blocks

In the unit:

- PCB with CPU, memory
- Ethernet Controller

Device front:

- LC display as a Touch Screen
  - 640 x 480 (VGA) Color TFT
  - Inverter on board
- 52-key touch-sensitive keypad
  - 24 machine control keys
  - 28 control keys (number block keys, cursor pad, function keys)
- Emergency stop button
- Rotary override switch (19 positions)
- Handwheel (optional)

Device rear side:

- 2 enabling buttons (2-channel, 3-stage)
- Serial interfaces:
  - HT 8 connecting cable to terminal box / connection module
  - USB interface (with dummy plugs)
- +24 V power supply
- Buffer battery (optional)

Connectable controls

- SINUMERIK 810D / 840D with PCU 50.3

24.2 Unplugging/plugging during operation

Trouble-free disconnection and connection of the HT 8 during machine operation requires the following:

- Release or override of the HT 8 EMERGENCY STOP
- Plugging the dummy plug after unplugging the HT 8

⚠ DANGER
Emergency stop switches that are inactive • may not be recognizable as such or • may not be accessible This is to prevent the EMERGENCY STOP switch from being used inadvertently.

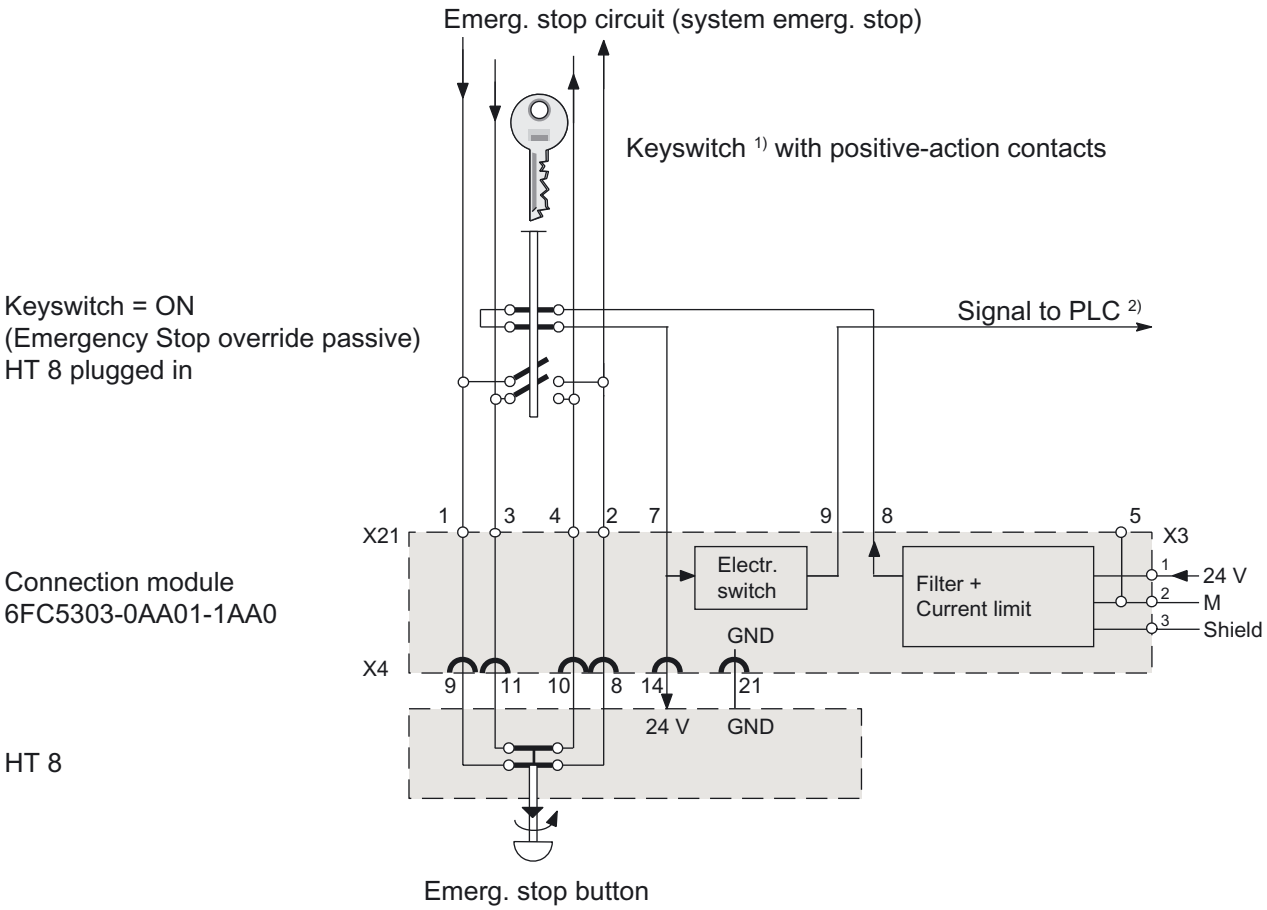

1) Keyswitch consisting of
- 2 switching elements 3SB3400-0A and
- operator control element 3SB30 or 3SB36
  (appropriate safety lock as required)
  Catalog: Switching devices and systems (NSK) at A&D CD

2) Triggers a timer.
If the signal level is still "low" after the monitoring period (approx. 5 min), the PLC emergency stop must be triggered.

To ensure the HIGH-LOW transition of the level, it may be necessary to use a pulldown resistor.

Figure 24-1 Connecting module 6FC5303-0AA01-1AA0: Recommended circuit for EMERGENCY STOP override (illustration shows keyswitch set to "ON" with HT 8 connected)

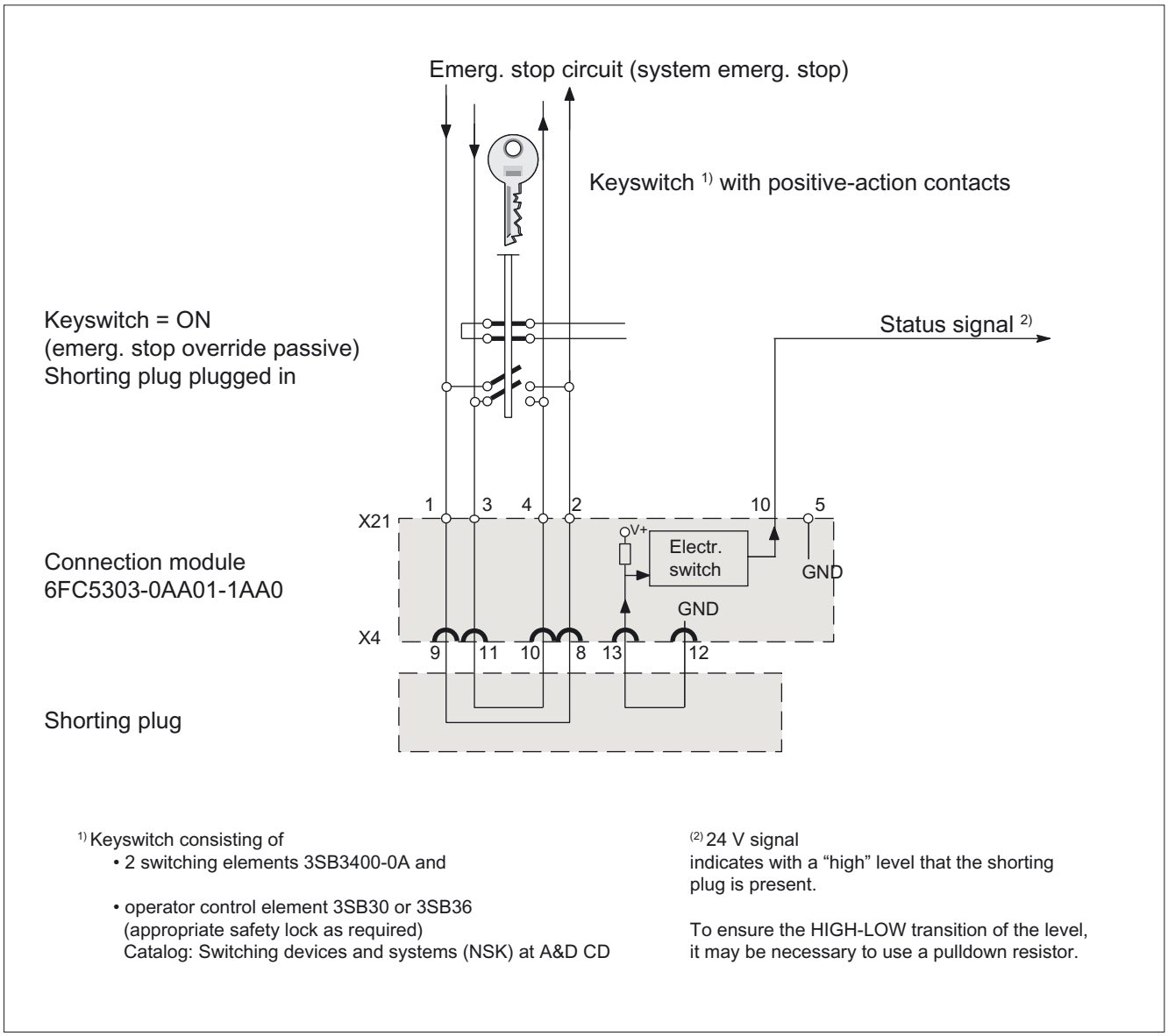

Figure 24-2 Connection module 6FC5303-0AA01-1AA0: EMERGENCY STOP override (illustration shows keyswitch set to "ON" with shorting plug connected)

Disconnecting the HT8

Keyswitch is set to "ON" position, HT 8 connection at distributor is active (incl. emergency stop)

1. With the keyswitch in the "OFF" position, the emergency stop circuits of the HT 8 are jumpered.
2. At the same time, the HT 8 supply voltage is disconnected and a monitoring signal to the PLC is set to the LOW level (provide a pull-down resistor if necessary).
   This HIGH-LOW transition starts a timer in the PLC, which opens the EMERGENCY STOP circuit via the relevant PLC outputs and series-connected relays after the changeover period
   (approx. 5 min) if the keyswitch is not reset to its initial position within this period.

3. The HT 8 must be removed within the changeover period and the EMERGENCY STOP circuit overridden using a shorting plug.

Connecting the HT8

Changeover from shorting plug to HT 8 connection is carried out in reverse order.

Detectability of a connected HT 8 in the PLC

1. **HW solution:**
   The X7 interface of the connecting module Basic PN signals "HT 8 Present" on pin 1 for the "active" connecting module (see Section: "Connections" → "Connecting module Basic PN" → "Interfaces").
   If the connecting module is "inactive", this signal is not set.
   This makes the "active" connecting module detectable in the PLC by wiring the above-mentioned pins of all connecting modules to digital I/Os on PLC I/O modules.
2. **Permanently configured MCPs / HT 8 on one control:**
   If there are only permanently configured MCPs / HT 8 on a control, removal of the MCP or HT 8 triggers the PLC alarm "400260 Machine Control Panel failed".
   Based on this, an "active" or "inactive" MCP / HT 8 in the PLC can be detected.
   The failure of an MCP / HT 8 is, however, only detected in the PLC if max. 2 MCP / HT 8 are permanently configured and no MCP changeover by means of FB9 (e.g. triggered by HMI when operator focus is switched).

24.3 Technical specifications

Security		
Safety class	III according to IEC 60536	
Degree of protection per EN 60529	IP 65	
Approvals	CE / cULus	
Electrical specifications		
Input voltage	24 V DC (via HT 8 cable, via cable connection box)	
Current carrying capacity	Enabling button:	10 - 400 mA / 2-channel, 3-stage
	EMERGENCY STOP button:	10 - 1000 mA / 2-channel
Max. current carrying capacity	USB 1.1 interface:	100 mA
Power consumption, max.	Approx. 13 W	
Mechanical data		
Dimensions (mm)	Diameter approx. 290	Height (without operating elements) approx. 65
Weight	1,730 g	
Fall height, max.	1.20 m	
Mechanical ambient conditions	**Operation**	**Transport** (in transport packaging)
Vibratory load	10 -58 Hz: 0.075 mm 58 -500 Hz: 10 m/s^2 3M4 per EN 60721-3-3	5 -9 Hz: 3.5 mm 9 -500 Hz: 9.8 m/s^2 2M2 per EN 60721-3-2
Shock stressing	150 m/s^2, 11 ms, 18 shocks according to EN 60068-2-27	250 m/s^2, 6 ms 6000 shocks according to EN 60068-2-29
Climatic ambient conditions		
Cooling	By natural convection	
Condensation, spraying water and icing	Not permitted	
Supply air	Without caustic gases, dusts and oils	
	Operation	**Storage/shipping** (in transport packaging)
Applicable standards	EN 60721-3-3	EN 60721-3-1 / -3-2
Climate class	3K5	1K3 / 2K4
Temperature limits	0 ... 45 ºC	-20 ... 60ºC
Temperature change	Max. 10 K/h	Max. 18 K/h
Limits for relative humidity	5 ... 85%	5 ... 95%
Permissible change in the relative air humidity	max. 0.1 % /min	

Display	
Size	7.5" TFT
Resolution	640 x 480 pixels
Service life	At ambient temperatures of > 40ºC and long periods of non-use, it is advisable to activate the screen saver function (via the display machine data DISPLAY_BLACK_TIME).

24.4 Spare parts

The following spare parts are available for the HT 8:

Description	Note	Number	Order No.:
Service pack connection box	Blind plugs for cable compartment	1	6XV6574-1AA04-4AA0
	Cable glands for connection box	2	
	1 set of screws for connection box cover	1	
	Terminal blocks for connection box	2	

24.5 Operator controls and indicators

24.5.1 View

Front



Figure 24-3 Operator interface of the HT8

(1) Emergency Stop button
(2) Rotary override switch
(3) Protective collar
(4) Display / Touch screen
(5) HMI control keys
(6) Function keys machine control panel

Rear side

Rear side of unit HT 8

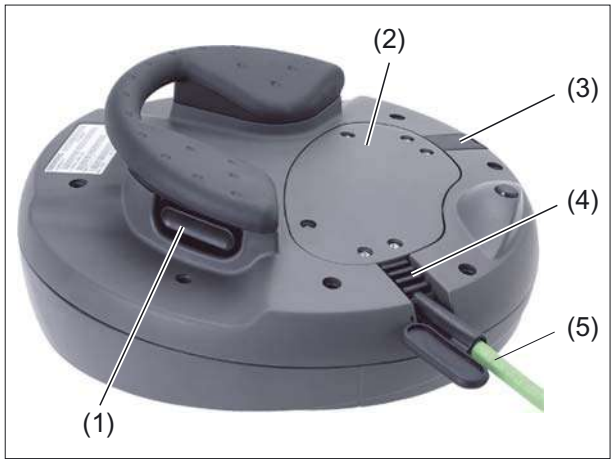

(1) Enabling buttons (one left and one right, under the handhold)
(2) Cable duct cover
(3) Second cable entry (connector with integrated USB 1.1 connection)
(4) Sleeve for connecting cable
(5) Connecting cable

USB 1.1 connection

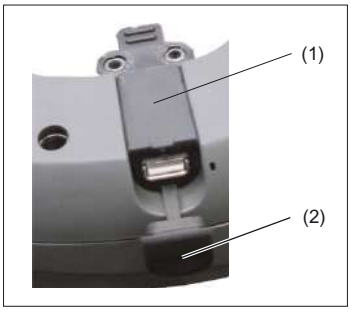

(1) Connector with integrated USB 1.1 connection

(2) USB protective cap

Bottom

The HT 8 consists of a double-walled housing (upper and lower shells).

On the lower shell, the HT 8 has three small drill-holes **(2)**. These drill-holes are attached for the purpose of diverting the liquid that can penetrate into the space between the double-walled housing if the malleable protective shroud on the upper shell is pushed through.

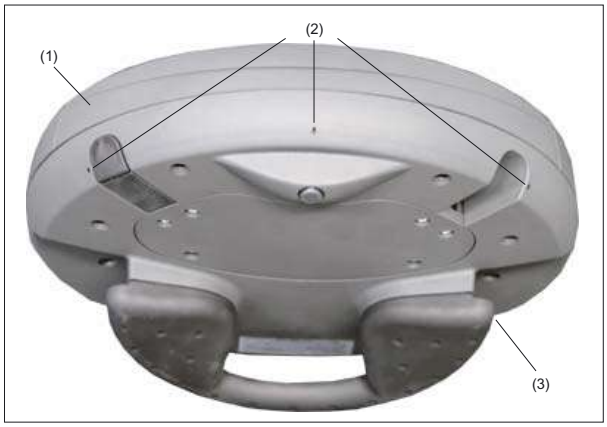

Figure 24-4 Lower shell HT 8

(1) Upper shell
(2) Holes
(3) Lower shell

24.5.2 Description

Display / Touch screen

The display is a backlit CCFL unit.
Its service life can be prolonged if the brightness is reduced by dimming.

All the application-specific functions are displayed on the touch-sensitive display. One touch of a finger on the corresponding key, triggers the respective function.

CAUTION
Do not touch the operating elements of the display with pointed or hard objects. This may considerably reduce their service lives.

In order to achieve precise assignment by pixels, the touch-sensor must be calibrated and adjusted to the touch screen.

Information on calibrating the touch screen of the HT8 can be found under:

- IM5 / Commissioning TCU and HT 8

Note

Calibration of the touch sensor may also become necessary during operation, because the resistance values of the touch membrane change when there is a temperature change.

Membrane keyboard

On the front side of the HT8, 52 keys are arranged in several key blocks (see Section: "Control and display elements" --> "View")

Function keys machine control panel

- links: START, STOP, RESET, AUTO, JOG, TEACH, ALARM CANCEL
- Bottom: U (User button)
- right: 2 x 6 traversing keys, 4 user keys (can be freely assigned)

HMI operating keys

- The number block contains the numbers 1-9, the decimal point and the minus sign
- The cursor pad is used to navigate on the screen.
- 7 keys for
  - Input
  - Menu change
  - Switch-over of the softkey bars
  - Help function

Emergency Stop button

The red mushroom-shaped head of the EMERGENCY STOP button is provided with a yellow ring.
Directly under the mushroom-shaped head, there is also a black ring which identifies the position status of the EMERGENCY STOP button.

	State	
Ring (black)	visible	not visible
Emergency Stop button	Not pressed	Pressed

If an EMERGENY STOP is triggered, the button locks into place.
If the button is locked in place, it can be unlocked by rotating it to the right.

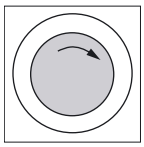

Emergency stop button
Press the red button in emergencies when

- people are at risk,
- there is the danger of machines or the workpiece being damaged.

As a rule, when operating the EMERGENCY STOP button, all drives are brought to a standstill with max. braking torque.



Machine manufacturer
For other reactions to the EMERGENCY STOP:
refer to the machine tool manufacturer's instructions

The signals are sent via the the connecting cable to the terminal box or the connection module and are available for further wiring.

Rotary override switch

The rotary override switch of the HT 8 has 19 positions.
The evaluation scale (0 to max.) is specified by the machine's manufacture in the form of machine data.

Agreement button

The HT 8 has two enabling buttons that are logically grouped.
This allows the enabling function to be triggered by either the left or the right hand during normal operation.

The enabling buttons are configured as 2-channel, 3-position switches for the following button positions:

- Released (no activation)
- Enabling (center position) - enabling for channel 1 and 2 is on the same switch.
- Panic (completely pushed through)

The signals are sent via the the connecting cable to the terminal box or the connection module and are available for further wiring in the control cabinet.

Interface USB 1.1

For connecting the keyboard and mouse, there is a USB 1.1 interface.
It is integrated in the connector, which closes off one of the two cable inlets on the rear side of the HT 8 (see Section: "Control and display elements" --> "View")

NOTICE
The service life of the USB connector is a max. of 1,300 connection cycles. After this period, it should be replaced.

Note

Replace the USB connector if its protective cap is torn, because in this case, the connector is no longer protected from dirt.

Only plug a USB FlashDrive into this port for service purposes.

NOTICE
A plugged-in USB FlashDrive can be damaged or broken off if the device falls.

24.5.3 Screen brightness control

If a screen with high contrast is displayed unchanged for longer than 1 hour, the screen brightness control must be activated (screen switched dark) in order to protect the TFT display against so-called "burn-in" of the last displayed screen.

For more information see:

/BEM/: Operator's Guide HMI Advanced

/IAM/: IM4 Start-up of HMI Advanced

CAUTION
You may do irreversible damage to your TFT display if the screen brightness control is not activated.

24.6 Interfaces

24.6.1 Overview

The following figure shows the connection of the individual function units to the interfaces of the HT 8.

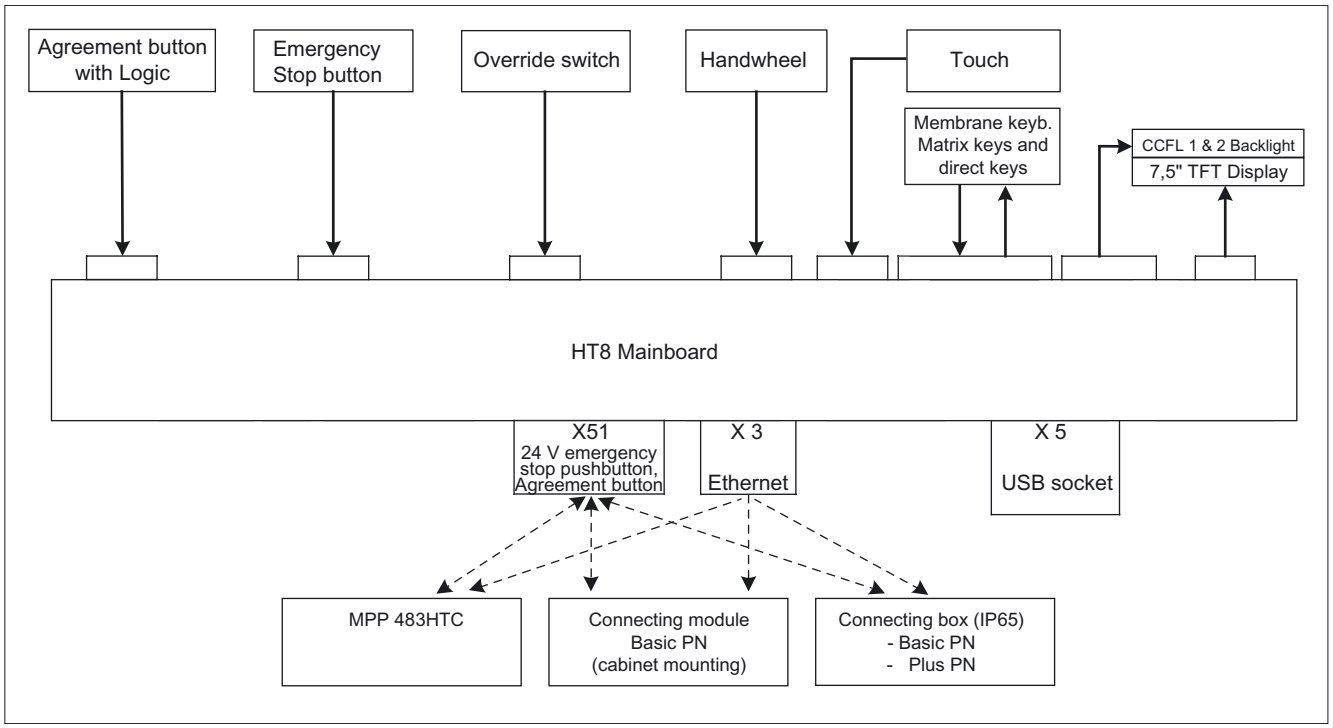

Figure 24-5 Block diagram of HT8 interfaces

24.6.2 Description

Signal type

B Bi-directional signal
O Signal output
V Power supply
I Signal input
VI Voltage input
VO Voltage output
K Contact

X3: Ethernet

Connector designation:	**X3**
Connector type:	8-pole RJ45-socket with interlock (above)

Table 24-1 X3 connector assignment

Pin	Signal	Signal type	Meaning
1	TD+	O	Transmit data +
2	TD-		Transmit data -
3	RD+	I	Receive data +
4	-	-	Unassigned
5	-	-	Unassigned
6	RD-	I	Receive data -
7	-	-	Unassigned
8	-	-	Unassigned

X5: USB 1.1 connection

Connector designation:	**X5**
Connector type:	6-pole plug connector

Table 24-2 Assignment of connector X5

Pin	Signal	Signal type	Meaning
1	Shield	V	Shield connection
2	+5 V	VO	Power supply for external devices
3	USB-DN	B	USB data channel 1
4	USB-DP		USB data+, channel 1
5	0 V	VO	Ground
6	Shield	V	Shield connection

X51: Supply 2

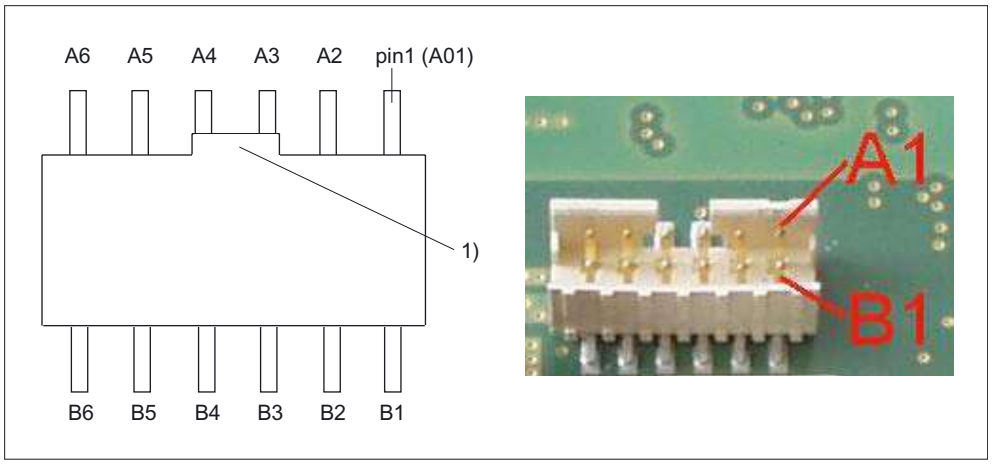

Figure 24-6 X51: Supply 2

(1) Recess

Connector designation: **X 51**

Connector type: 12-pole connector plug with coding and locking

Pin	Signal	Signal type	Meaning		Pin	Signal	Signal type	Meaning
A1	N.C.	-	Unassigned		B1	N.C.	-	Unassigned
A2	Enable 2+	O	Enabling button Channel 2, digital		B2	ENABLE 2-	O	Enabling button Channel 2, digital
A3	Enable 1+		Enabling button Channel 1, digital		B3	ENABLE 1-		Enabling button Channel 1, digital
A4	STOP -13	K	EMERGENCY STOP circuit 2		B4	STOP -14	K	EMERGENCY STOP circuit 2
A5	STOP -23		EMERGENCY STOP circuit 1		B5	STOP -24		EMERGENCY STOP circuit 1
A6	P24	VI	+24V power supply		B6	M24	VI	External ground

24.7 Connectors

24.7.1 Overview

The HT 8 is connected via Ethernet (see Section: "Interfaces" → "Overview.").

For a connection via Ethernet the individual bus participants communicate via

- terminal box Basic PN / terminal box Plus PN
- Connection module Basic PN (for control cabinet installation) or
- MPP 483HTC

HT 8 with		
Terminal box Basic PN / Plus PN	Connection module Basic PN	MPP 483HTC
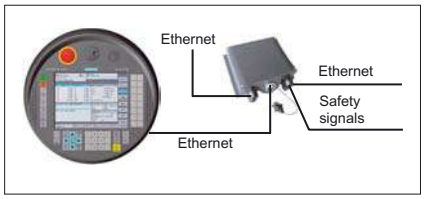	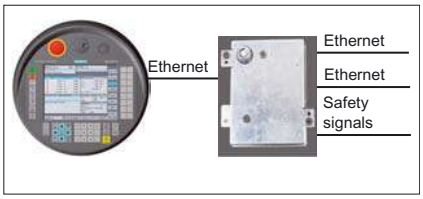	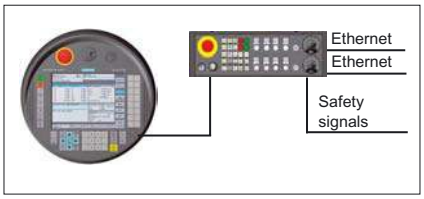

The connection via the terminal box Plus PN allows quick connecting and disconnecting while the machine is operating without the EMER STOP being triggered.

If no HT 8 is connected, observe:

⚠DANGER

Emergency stop switches that are inactive

- **may not be recognizable as such**
- **may not be accessible.**

This is to prevent the EMERGENCY STOP switch from being used inadvertently.

24.7.2 MPP 483HTC

The MPP 483HTC variant of the machine control panel MPP 483 has an integrated connection module thereby providing a connection option for the HT 8.

Emergency Stop override

For the MPP 483HTC, the EMER STOP circuit is overridden by a keyswitch. The activation of the keyswitch is sent to the PLC, which generates a message after a certain period of time if the keyswitch was held for too long or remains activated due to a defect.

24.7.3 Connecting cable

The connecting cable is an industrial cable and, thus, resistant to many solvents and lubricants. The flexural strength is geared to the actual usage conditions.

The connecting cable is available in different lengths. You will find detailed information in Section: "Accessories."

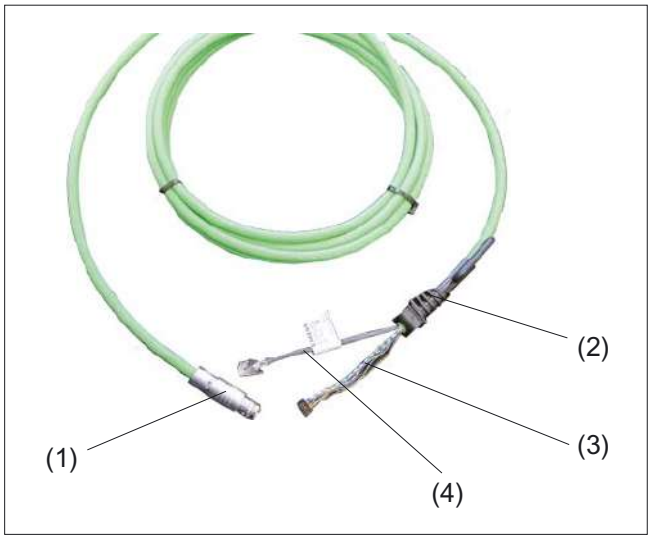

Figure 24-7 Connecting cable of the HT 8

(1) Metallic push-pull circular connector (ODU connector)
(2) Strain relief and kink protection for connecting cable
(3) RJ45 connector (Ethernet connection)
(4) Plug-in connector for (Enabling button, EMER STOP, 24V and safety signals)

The connecting cable is connected to the HT8 via the RJ45 connector (3) and the plug-in connector (4). The ODU connector (1) serves to connect the connecting cable to the terminal box PN or the connection module PN (control cabinet installation). The tightening torque for the nut of the ODU socket is 6.5 Nm.

The HT 8 has two cable inlets on its rear side for connecting the cable. This makes it possible to attach the connecting cable on either the right or left side.
One of the cable inlets is closed at the factory by a connector in which an IP65-capable USB 1.1-connection is integrated.

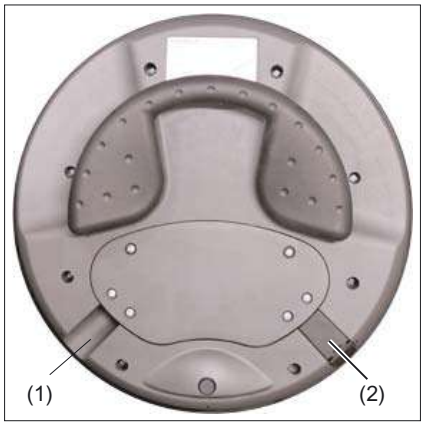

Figure 24-8 Rear side of the HT 8 with cable inlets

(1) Cable inlet without connecter plug
(2) Cable inlet with connector plug

Laying the connecting cable



1. Open the cable duct cover by unscrewing the six PT screws (4 x 20 mm) approximately 1 cm.
   Use a size 2 Phillips screwdriver
   Ensure that you do not exceed the tightening torque of max. 0.4 - 0.5 Nm.

Cable duct cover open



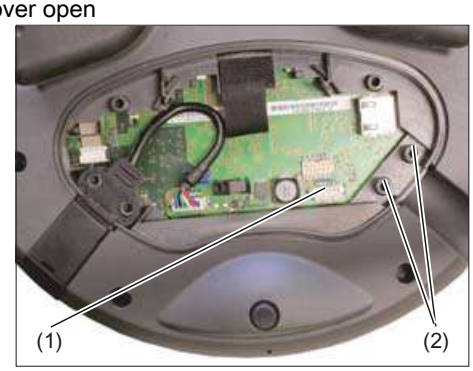



2. Insert the connecting cable into the cable inlet that suits your intended application (left or right).
   Press the cable downward slightly until it rests completely on the fastening burls **(2)** .
   Put a plug in the cable inlet that you do not intend to use.



3. Press the plug connector firmly into the power supply socket **(1)**.

NOTICE
When plugging in the connector plug, ensure that all cables are lying straight in the cable guide. Otherwise, crushed wires can negatively impact the functionality. Check to ensure that all wires are aligned and straight and check the firm seating of the plug-in connector before you carry out the next step.



4. Connect the RJ-45 connector to the Ethernet socket.

Correctly laid connecting cable

HT 8 left rear side



HT 8 right rear side



5. Put the cable duct cover on and secure it by tightening the six screws.

NOTICE
The housing of the HT 8 is made of plastic. Therefore, the mounting hole threads cannot handle the same amount of stress as a comparable metallic housing. Therefore, do not exceed 0.4 to 0.5 Nm of torque when tightening the screws (also for protecting the connecting cable). If you use electric screwdrivers, ensure the max. speed of 600 RPM is adhered to (torque: 1 Nm). The screws of the cable duct cover may only be loosened or tightened a maximum of 20 times. Otherwise, there is the danger that the threads might become damaged and the seal of the housing will be compromised which could lead to failure of the device.

24.7.4 Power Supply

The HT 8 is supplied with power via the connecting cable of the terminal box PN or of the connecting module PN.
The input voltage range is designed for +24 V DC.

24.7.5 Terminal Box PN

24.7.5.1 Features

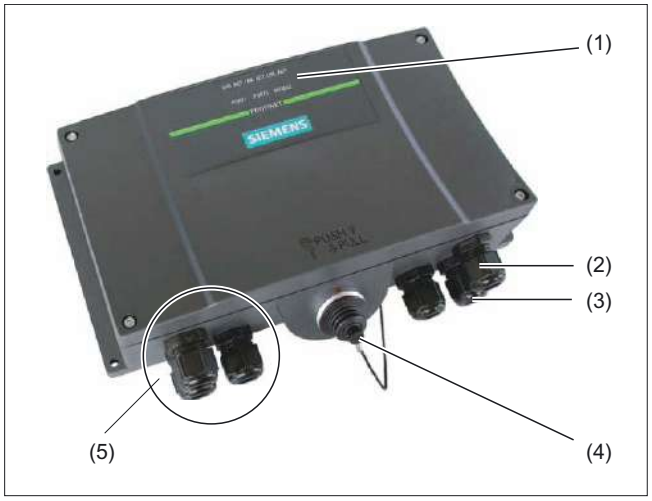

Figure 24-9 Terminal Box PN

(1) LEDs
(2) Screwed joint for power supply cable and shield
(3) Screwed joint for cable with supplementary Stop and enabling button signals and for PLC-accompanying signals
(4) Connecting socket for the connector plug of the connecting cable (covered with dummy cap)
(5) Screwed joint for process data line (Ethernet)

Note

Protection class IP65 at the terminal box is ensured with plugged-in HT 8 or plugged-in dummy cap.

The terminal box PN is available in two variants.

- Terminal box Basic PN
- Terminal box Plus PN

Note

The exterior of the terminal box PN variants differ only in the printing on the side.

Terminal box Plus PN

The terminal box PN is not capable of acting as a hot-plug. This means that it is possible to connect and disconnect during operation without any disruption.
The EMER STOP circuit is automatically maintained during the switching of connectors.

The **Terminal box Plus PN** is available under order no.**6AV6671-5AE11-0AX0**.

Terminal box Basic PN

The terminal box Basic PN can be used if no hot plug-capability is required.
The EMER STOP circuit can be overridden here by external mechanisms.

The **Terminal box Basic PN** is available under order no.**6AV6671-5AE01-0AX0**.

Clearance

The following clearances are required around the Terminal Box PN:

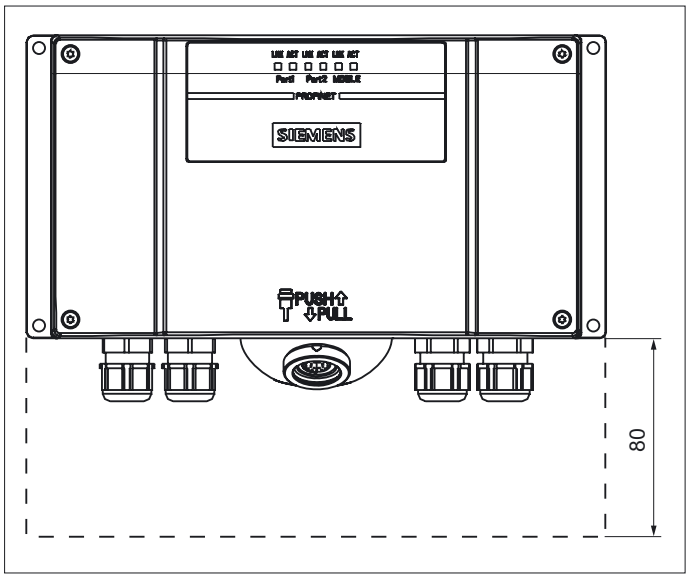

24.7.5.2 Terminal box Plus PN

The Terminal Box Plus PN differs from a Terminal Box Basic PN due to four relays that are mounted on the board.

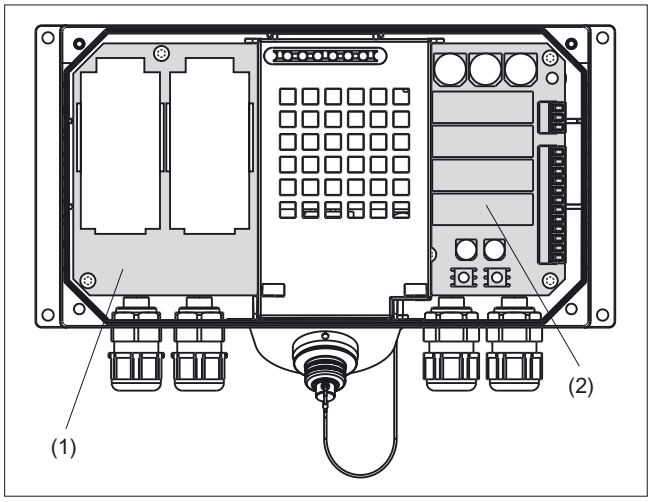

Figure 24-10 Terminal box Plus PN

(1) Board
(2) Relay

Switching statuses of the EMERGENCY STOP circuit

- with HT 8 connected**wi**th emergency stop button and terminal box Plus PN

HT 8	Emergency Stop button	Switch status, Emergency Stop circuit
connected	Not pressed	Emergency stop circuit in the terminal box remains closed.
connected	Pressed	The EMER STOP circuit in the terminal box is open. The system to be monitored is stopped.
not connected	-	Emergency stop circuit in the terminal box remains closed.

⚠WARNING

disconnect HT 8

If you disconnect the HT 8 from the terminal box Plus PN, the EMER STOP circuit is closed and the stop state of the system to be monitored is cleared. This occurs irrespective of whether the EMER STOP button has been pressed on the HT 8.

24.7.5.3 Terminal box Basic PN

In contrast to the Terminal Box Plus PN, the "Stop loop through" function is not implemented in the Terminal Box Basic PN. Relays are therefore not required.

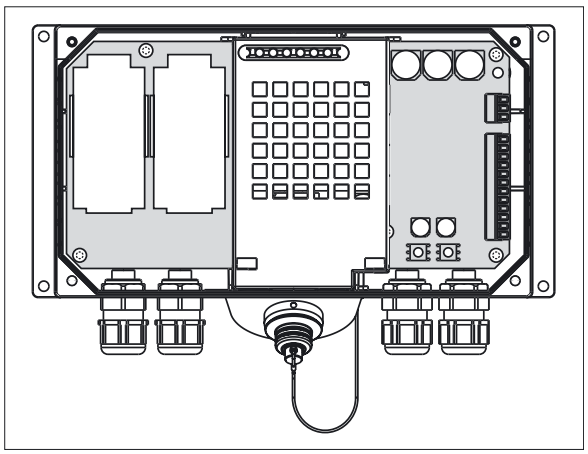

Figure 24-11 Terminal box Basic PN

CAUTION
The EMER STOP circuit is controlled via the EMER STOP button when the HT 8 is connected. If the connecting cable of the HT 8 is disconnected from the terminal box Basic PN, the EMER STOP circuit is interrupted. This leads to a reliable machine stop or an EMER STOP of the system to be monitored.

Switching statuses of the EMERGENCY STOP circuit

- with HT 8 connected**wi**th emergency stop button and terminal box Basic PN

HT 8	EMERGENCY STOP key	Switch status EMERGENCY STOP circuit
connected	Not pressed	Emergency stop circuit in the terminal box remains closed.
connected	Pressed	The EMER STOP circuit in the terminal box is open. The system to be monitored is stopped.
not connected	-	The EMER STOP circuit in the terminal box is open. The system to be monitored is stopped.

⚠WARNING
If you have shut down the system to be monitored, you can only release the EMER STOP button or place the system to be monitored back into operation if the condition that triggered the EMER STOP function has been corrected and a safe restart is carried out.

24.7.5.4 Interface assignments

Information for interface assignment of the terminal box PN can be found under

- SIMATIC HMI/Operating unit Mobile Panel 177 (WinCC flexible)
- www.siemens.de\simatic-doku

24.7.6 Connection module Basic PN

24.7.6.1 Features

The connection module Basic PN was specially developed for installation in the control cabinet. The connector protrudes through the wall of the control cabinet so that the HT 8 can be connected from the outside.

The **Connection module box Basic PN** is available under order no.**6FC5303-0AA01-1AA0**.

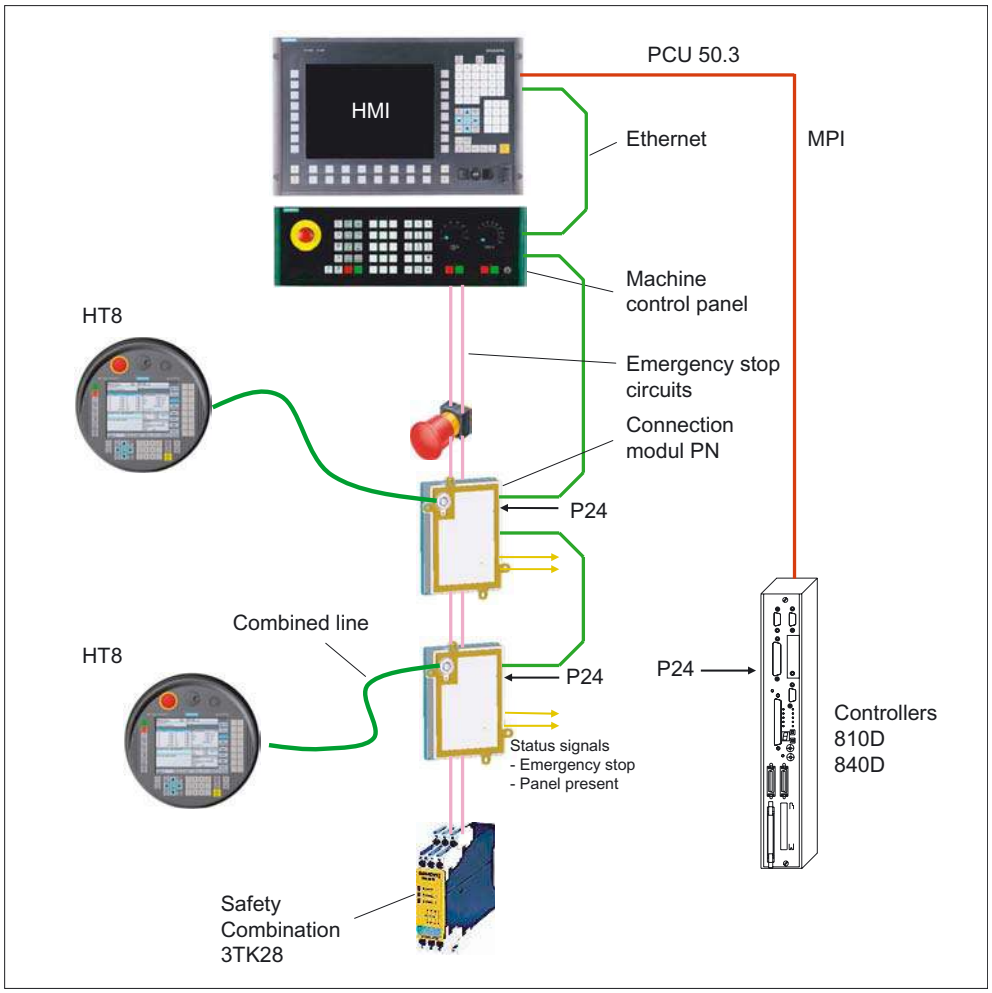

Figure 24-12 Block diagram - control cabinet installation

The connection module Basic PN is not hot plug-capable.

The EMER STOP lines of the HT 8 are not monitored, but are placed directly on the EMER STOP circuit
For overriding the EMER STOP circuit during connecting or disconnecting the HT 8, there is a button or keyswitch (see Section: "Connecting/disconnecting during operation").

24.7.6.2 Dimension drawing

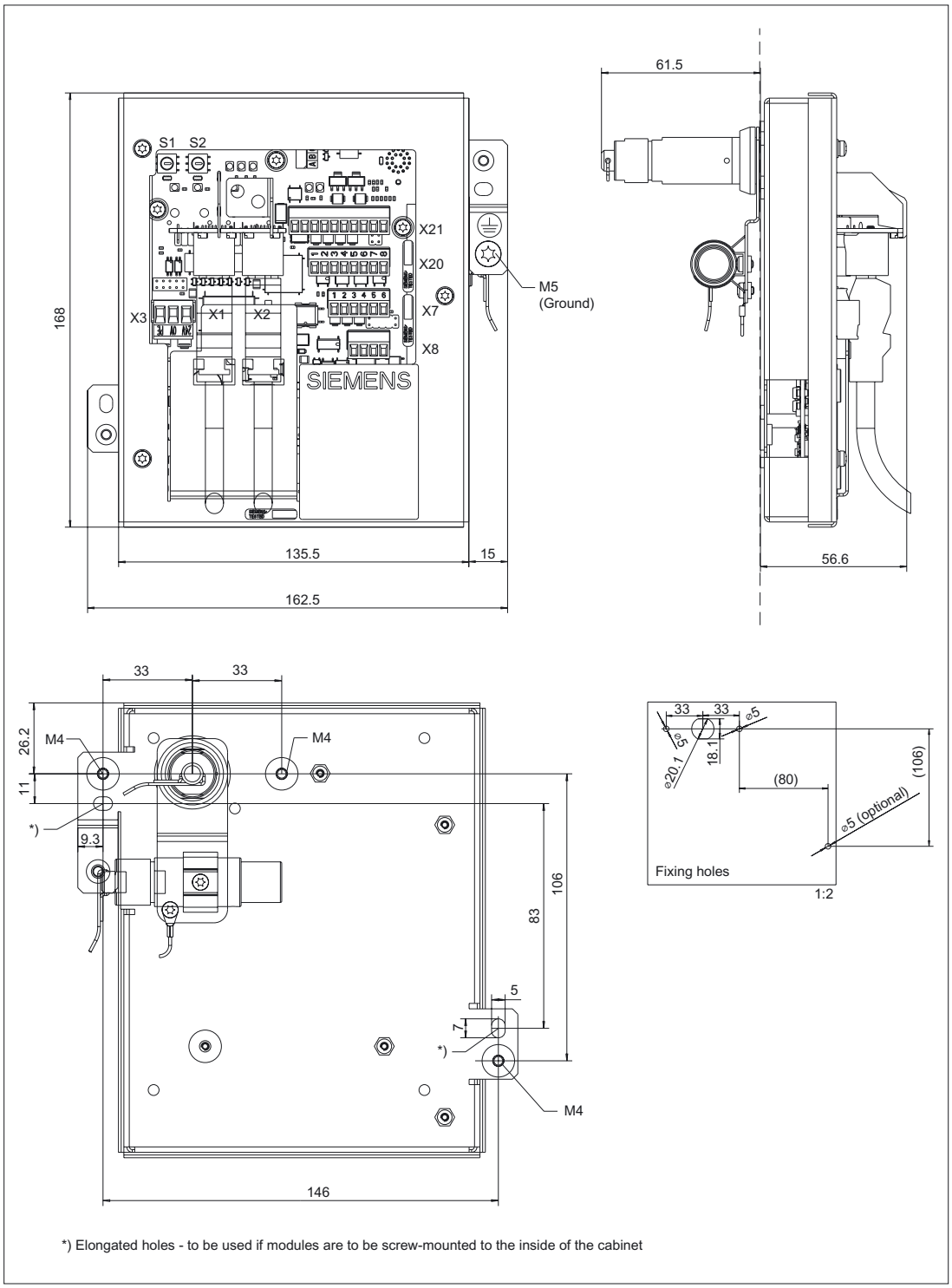

Figure 24-13 HT8 connection module Basic PN - dimension drawing for control cabinet installation

24.7.6.3 Interfaces

The HT 8 is connected to the connection module Basic PN via a round connector.

The interfaces of the connection module are located on the rear side (see figure).

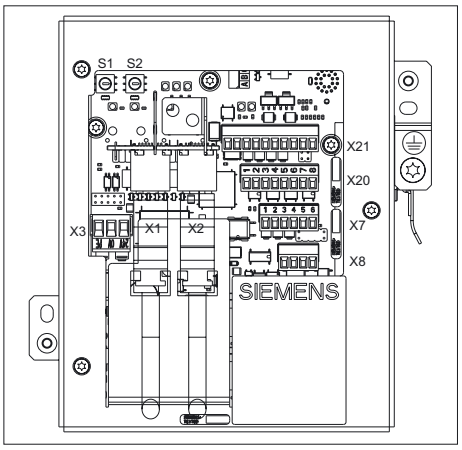

S1 / S2 DIP Fix switches (rotary coding switch)

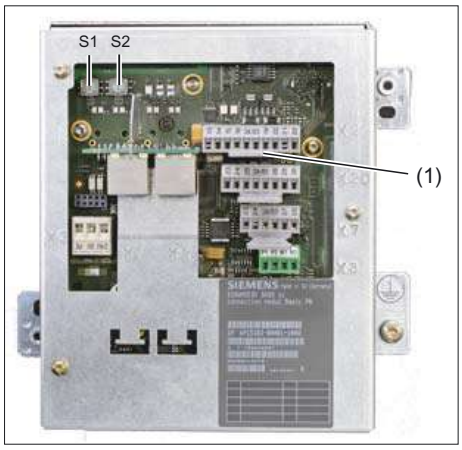

(1) Interfaces with attached connectors

Information on setting the bus addresses can be found under:

- IM5 / Commissioning TCU and HT 8

PN pin assignments of the connectors

Signal type:

I Input (Input)
O Output (Output)
B Bi-directional signals
P Potential

X3: Power supply

For the pin assignments of the power supply interface X3, refer to Section: "Connection conditions" →"Secondary electrical conditions" → "Pin assignments of the interfaces".

X7: Panel Present

Connector designation:	**X7**
Connector type:	6-pole Phoenix terminal

Table 24-3 Assignment of the interface Panel Present X7

Pin	Signal name	Signal type	Meaning
1	PRES	O	"High": Panel (HT 8) plugged in
2	XCTL	O	"Low": EMER STOP button pressed [1)]
3	XFAULT	O	"Low": Error in EMER STOP electronics [1)]
4	N.C.	-	Unassigned
5	N.C.	-	Unassigned
6	M (GND)	P	Ground

[1)] Function not implemented in Basic PN variant, output is not switched to "High"

X8: Emergency Stop wiring terminal

Connector designation:	**X8**
Connector type:	4-pole Phoenix terminal

Table 24-4 Assignment of the EMER STOP wiring terminal X8

Pin	Protective circuit
1	On-board jumper between 1 and 2
2	
3	On-board jumper between 3 and 4
4	

Note

Use this terminal for simple routing of the emergency stop cables, optional.

The connector is only used to assist looping through. The connected pins 1 and 2 as well as 3 and 4 have no additional function on the connection module.

X20: Enabling buttons

Connector designation:	**X20**
Connector type:	8-pole Phoenix terminal

Table 24-5 Assignment of the interface enabling buttons X20

Pin	Signal name	Signal type	Meaning
1	ZUST1P	I	Electronic enabling button 1 P
2	ZUST1M	O	Electronic enabling button 1 M
3	ZUST2P	I	Electronic enabling button 2 P
4	ZUST2M	O	Electronic enabling button 2 M
5	N.C.	-	Unassigned
6	N.C.	-	Unassigned
7	N.C.	-	Unassigned
8	N.C.	-	Unassigned

X21: EMER STOP and keyswitch

Connector designation:	**X21**
Connector type:	10-pole Phoenix terminal

Table 24-6 Assignment of the interface EMER STOP and keyswitch X21

Pin	Signal name	Signal type	Meaning
1	STOP23	B	Emergency Stop circuit
2	STOP24		Emerg. stop circuit
3	STOP13		Emerg. stop circuit
4	STOP14		Emerg. stop circuit
5	M	P	Ground
6	N.C.	-	-
7	IN_E9	P	P24 switched by keyswitches
8	P24_FILT		Filtered 24 V module power supply
9	IN_E9_EXT	O	"High": Key-operated switch actuated
10	IN_E12_EXT		"High": Terminating connector plugged in

24.7.6.4 Installing the dummy plug

Procedure

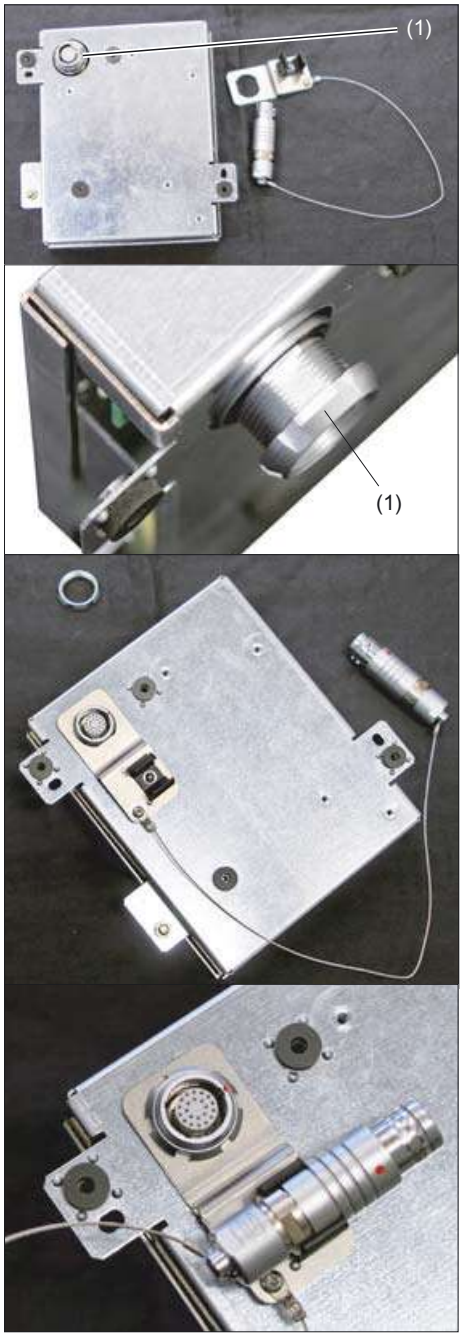

(1) Lock nut

1. Unscrew the lock nuts.

2. Attach the dummy plug bracket.

3. Tighten the lock nut and put the dummy plug into the bracket.

Note

If you never remove the HT8 from the connection module, it is not necessary to install the dummy plug.

24.8 Accessories

24.8.1 Overview

The following accessories are available for the HT 8:

Description	Note	Number	Order No.:
Connection box Plus PN	**with** automatic emergency stop override for mounting in the system	1	6AV6671-5AE11-0AX0
Connection box Basic PN	**without** automatic emergency stop override for mounting in the system	1	6AV6671-5AE01-0AX0
Connecting module Basic PN	**without** automatic emergency stop override for mounting in the system		6FC5303-0AA01-1AA0
Wall holder	for safekeeping, also suitable for stationary operation	1	6AV6574-1AF04-4AA0
Connecting cable	Length: 2 m	1	6XV1440-4BH20
	Length: 5 m	1	6XV1440-4BH50
	Length: 8 m	1	6XV1440-4BH80
	Length: 10 m	1	6XV1440-4BN10
	Length: 15 m	1	6XV1440-4BN15
	Length: 20 m	1	6XV1440-4BN20
	Length: 25 m	1	6XV1440-4BN25

24.8.2 Wall holder

The HT 8 can be safely kept and operated in a stationary manner in the wall holder.

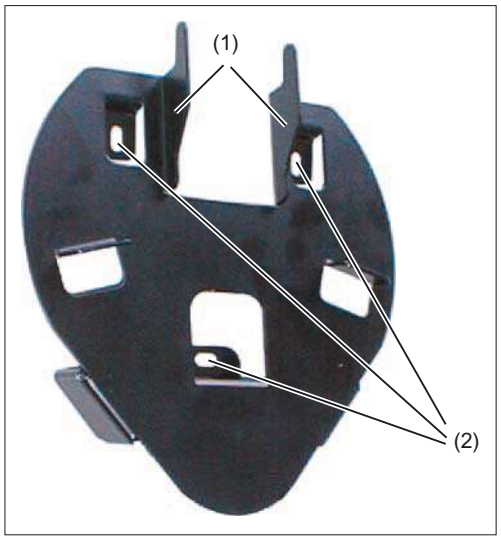

(1) Hook for the grip on the handheld unit
(2) Drill holes for screw fixing

Ensure that you position the wall holder in such a manner that

- the display of the hung-in HT 8 is not exposed directly to the sun's rays.
- the HT can be hung in based on ergonomic considerations. Therefore, choose a suitable mounting height.

Dimension drawing

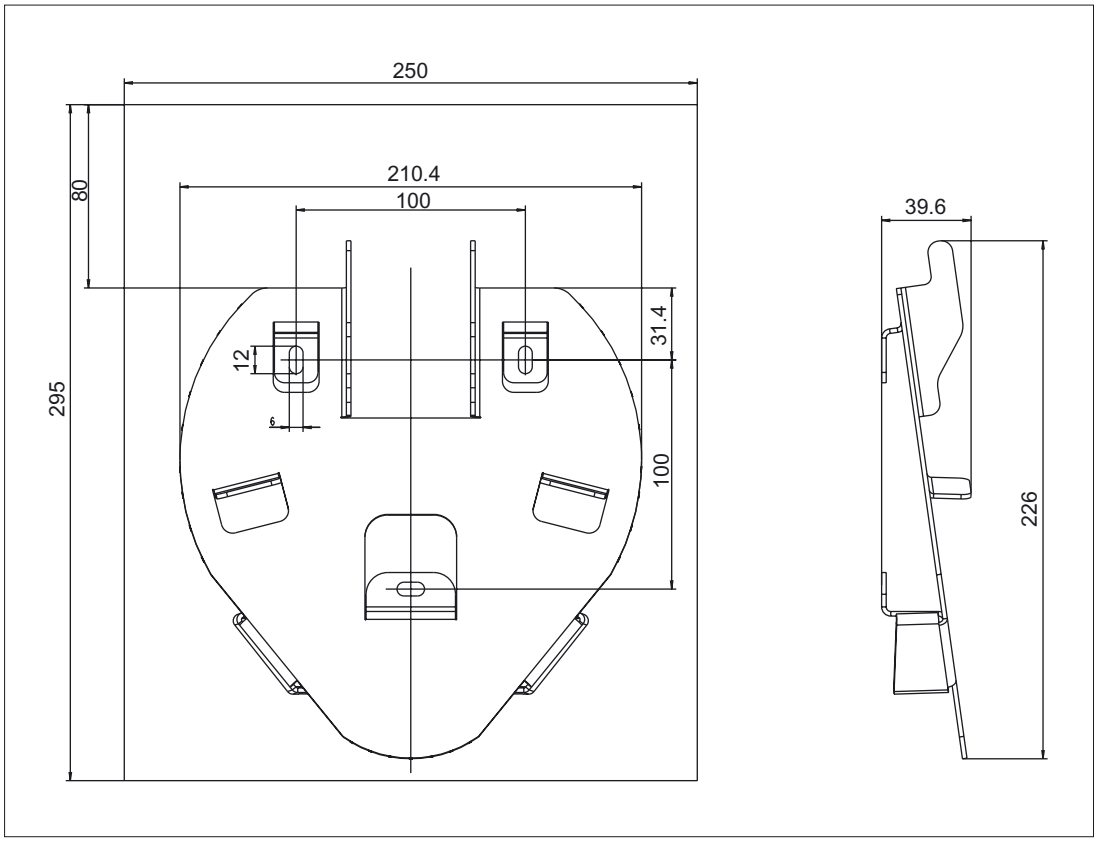

Figure 24-14 HT8 wall holder - dimension drawing

Mini handheld unit

25

25.1 Description

The mini handheld unit (Mini HHU) is a small easy-to-handle unit for setting up and operating simple machines in the JobShop area or similar applications. Special attention has been paid to ergonomics and logical operating in the design of the housing and the arrangement of the control elements.

The Mini HHU is intended for connection to 810D and 840D controls. It can also be used with the 840C and FM-NC.

25.2 Operator controls and indicators

25.2.1 View

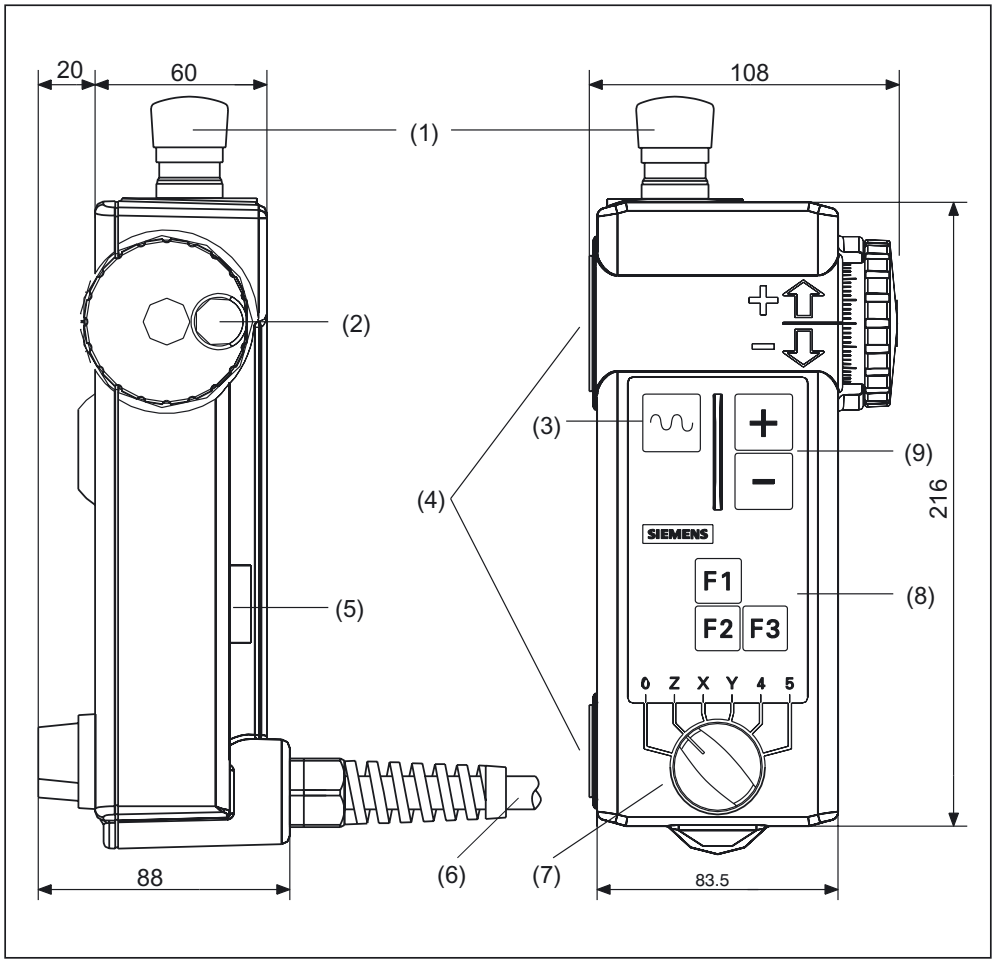

Figure 25-1 Mini handheld unit

(1) Emergency Stop button, two channels
(2) Handwheel
(3) Rapid traverse key for high-speed travel with traversing keys or handwheel
(4) Magnetic clamps for securing to metal components
(5) Enabling button, two channels, 3-positions
(6) Connecting cable 1.5 m ... 3.5 m
(7) Selection switch for 5 axes and neutral position
(8) Function keys F1, F2, F3
(9) Traversing keys + direction / - direction

25.2.2 Description

Emergency Stop button

The emergency stop button must be pressed in an emergency

1. when a person is at risk,
2. When there is a danger of the machine or workpiece being damaged.

Enabling button

The enabling button is designed as a 3-way switch. This must be held in its central position for movements to be triggered.

Axis selection switch

The axis selection switch can be used to select up to five axes. The coding is carried out in Gray Code.

Table 25-1 Coding of axis selection switch

Connector X1			Switch position	Function
Pin 8	Pin 9	Pin 10		
0	0	0	-	Mini HHU not connected
1	1	0	0	No axis selected
0	1	0	Z	Z axis selected
0	1	1	X	X axis selected
1	1	1	Y	Y axis selected
1	0	1	4	Axis 4 selected
0	0	1	5	Axis 5 selected

Function keys

The function keys can be used to trigger machine-specific functions.

Traversing keys

The + and - traversing keys can be used to trigger traversing movements on the axis selected via the axis selection switch.

Handwheel

The handwheel can be used to initiate movements at the selected axis using the axis selection switch. The handwheel supplies two guide signals with 100 I/U.

Rapid traverse key

The rapid traverse key increases the traversing speed of the selected axis with the axis selector switch. The rapid traverse button is active both for traversing commands issued via the +/- keys and for handwheel signals.

25.3 Connection

Connection kit

A connection kit that must be ordered separately is required for connection of the mini HHU. This connection kit contains a flange socket made of metal for installation at the machine and a dummy plug for overriding the EMERGENCY STOP circuit when the HHU is not connected.

You will find the order number in section: "Accessories."

Mounting the flange socket on the control housing

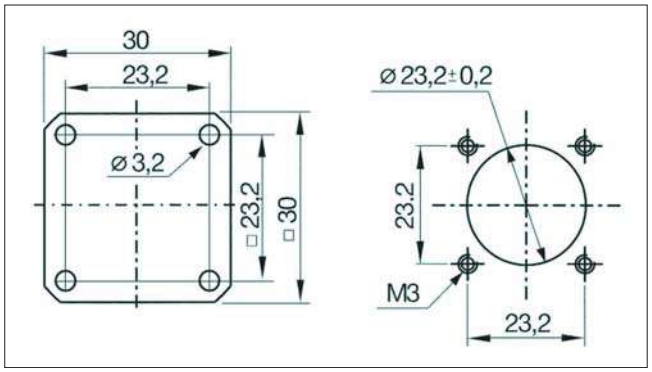

Figure 25-2 Hole pattern for mounting

1. Use the hole pattern for the wall of the control housing.
2. Route the connecting cable through the large drill hole into the control housing.
3. Mount the flange socket (with seal) onto the control housing.
4. Connect the connecting cables according to the circuit diagram.

Angle box

An angle box is available as an option, which permits the cable outlet direction to be rotated through 90°.

You will find the order number in section: "Accessories."

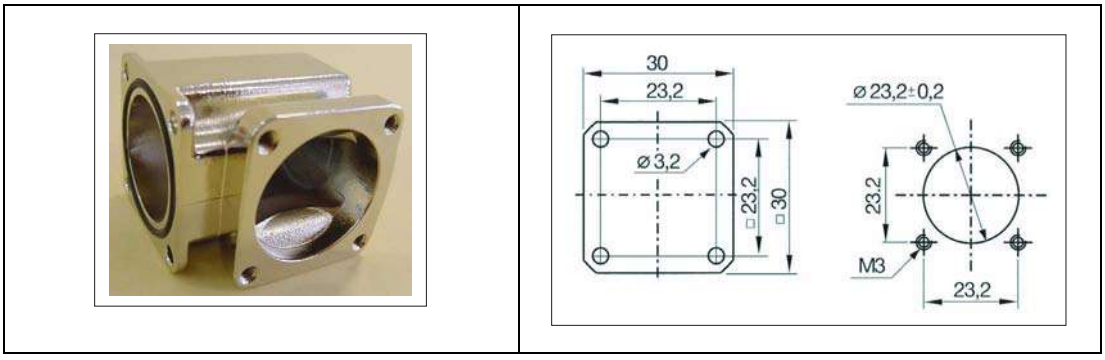

Adapter plate

To install the angle box or the metal flange socket in the location for plastic flange sockets, an adapter plate is available to enable installation in the existing holes / threads of the plastic flange socket.

You will find the order number in section: "Accessories."

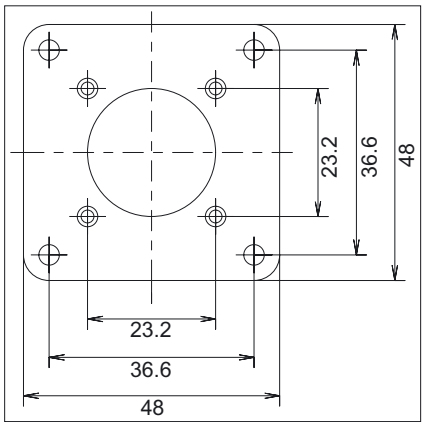

Figure 25-3 Dimension drawing of the adapter plate

Mini HHU connection

The mini HHU is connected to the PLC or the connector for handwheels via a flange socket. The flange socket is part of the connection kit. The signals are sent to the NC in parallel (without MPI). There is no need for an additional distributor.

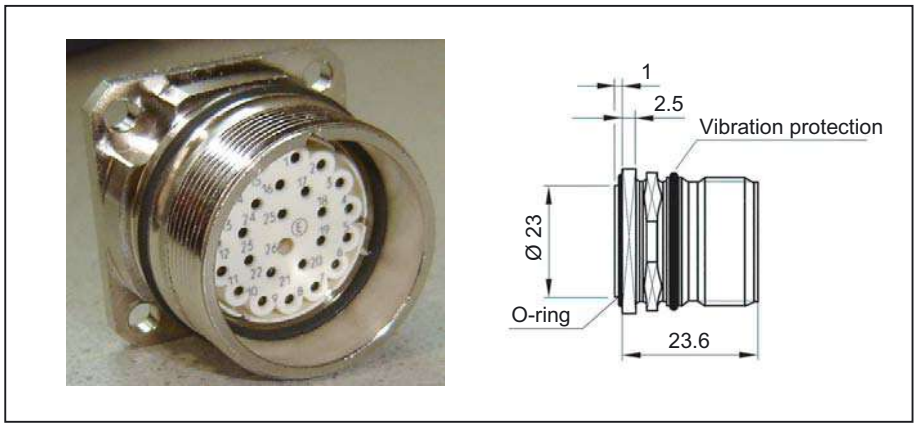

Figure 25-4 Flange socket

1. Plug the connecting plug of the mini-HHU (or the jumper connector) into the detent lugs / guideways of the flange socket.
2. Use the twist lock to fasten it.

Note

If the plug is connected incorrectly, the twist lock will be damaged!

Handwheel signals connection

The 6FX8002–4AA21–1xx0 cable can be used to connect the handwheel signals to the NC.

The pin contacts on the cable must be replaced with the socket contacts contained in the connection kit.

Use the contacts supplied when connecting the cables.

- 24 x InterContec crimp socket contacts: 60.001.11
  0.14 – 1.00 mm^2 / AWG 25 -17

Note

The crimping tool suggested should be used:
InterContec crimping tool C0.101.00

Circuit diagram and sample connection

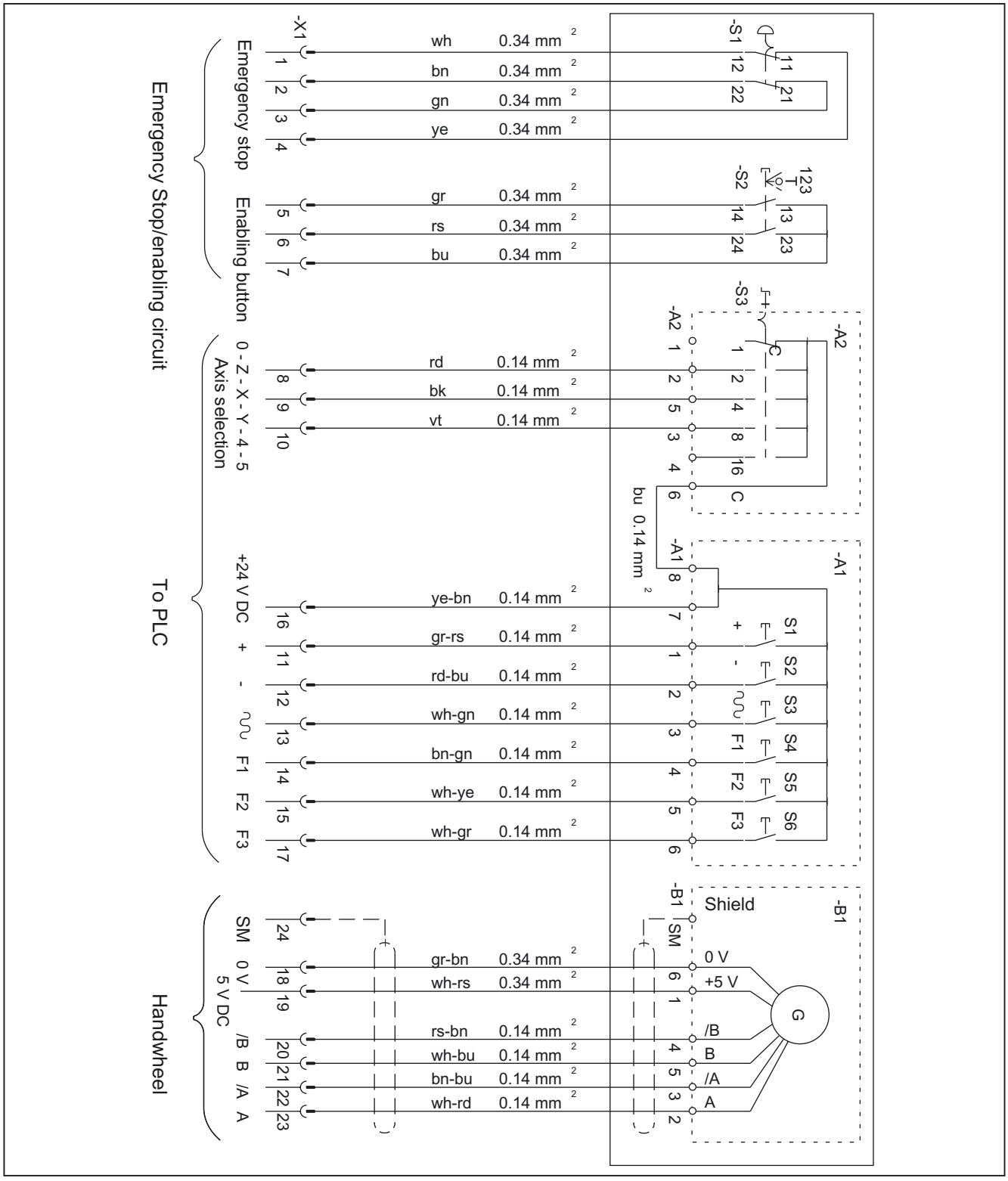

25.4 Configuring

The FC76 module supplied in the toolbox supports configuration of the mini HHU.
It is located in the toolbox in the BSP_PROG directory in the file Minibhg.zip. This module is included in the toolbox in version 5.1 and later only. For example in toolbox 5.1.x(8x0d\050104\disk1\Bsp_prog\Minibhg.zip or in toolbox 6.1.2(8x0d\060102\bsp_prog\Minibhg.zip.

The FC76 contains a standard program for the mini HHU and is valid for use with SINUMERIK 840D/810D. The program is generally valid and therefore requires several input and output signals when called.

To avoid collisions (caused by simultaneous access to one and the same signal), the FC2 (NCK-PLC interface) that occurs in the basic program must be processed before the FC76.

25.5 Technical data

Table 25-2 Handheld unit

Operator controls			
Enabling button	1 x: floating	2 channels, 3-positions	NO contact
Emergency Stop button	1 x: floating	2 channels	NC contact, locked by twisting
Selection switch	5 axes: X, Y, Z. 4. 5 and neutral position		
Jog key +	Positive traverse direction		
Jog key -	Negative traverse direction		
Jog key 	Rapid traverse for jog keys and handwheel		
Function keys	3 x: F1, F2, F3		
Handwheel	100 I/U		
Electrical data			
Operating voltage for switching signals	24 V		
Operating voltage for handwheel	5 V		
5 V current consumption	Approx. 90 mA		
Handwheel signals	RS 422		
Emergency stop button	24 V	2 A	NC contact
Enabling buttons	24 V	2 A	NO contact
General data			
Housing	Ergonomically optimized housing made from polyamide 6, control elements arranged by sense of touch		
Mounting	2 magnetic clamps		
Connecting cable	Spiral cable 1.5 m; can be stretched to beyond 3.5 m; connector with pin contacts		
CE conformity	Yes		
Mechanical data			
Dimensions approx.	Height: 250 mm	Width: 110 mm	Depth: 90 mm
Weight	Approx. 0.8 kg without connection cable		
Ambient conditions			
Temperature ranges		Application/operation	Storage/transport
		0 ... 55 °C	-20 ... 60° C
Temperature change	Within 1 minute max. 0.2 K		
Permissible change in relative humidity EN 60721-3-3, Class 3K5			
Within 1 minute	Max. 0.1%		
Protection class		IP65	
Connection kit			
Flange socket	Made of metal with female contacts and dummy plug		
Dummy plug	For overriding the EMERGENCY STOP circuit		

25.6 Spare parts

The following spare parts are available:

Item name	Order number	Can be used with 6FX2007-					
		1AD00	1AD10	1AD01	1AD11	1AD02	1AD12
		2 x ZST PVC connectors		3 x ZST PVC connectors		3 x ZST Metal connectors	
Servo handwheel (5 VDC, A / B - push-pull, without dial)	1009439	x	x	x	x	x	x
Rotary selector switch (6 positions, without dial)	1009219	x	x	x	x	x	x
EMERGENCY STOP button (complete with keyset, label and switching element)	1009221	x	x	x	x	x	x
Enabling button, 2 stages (complete)	1009233	x	x				
Enabling button, 3 stages (complete)	1009561			x	x	x	x
Set of operator buttons (for servo handwheel, rotary selector, enable key)	1009227	x	x	x	x	x	x
Connection cable (coiled, wired on PVC connector, connection end preassembled)	1009081	x		x			
Connection cable (coiled, wired on metal connector, connection end preassembled)	1009700					x	
Connection cable (straight, wired on PVC connector, connection end preassembled)	1009279		x		x		
Connection cable (straight, wired on metal connector, connection end preassembled)	1009710						x
Flange-mounting socket-outlet, PVC (complete with seals and contacts)	1009084	x	x	x	x		
Flange-mounting socket-outlet, metal (complete with seals and contacts)	1009714					x	x
Jumper connector, PVC (with jumpered EMERGENCY STOP contacts)	1009046	x	x	x	x		
Jumper connector, metal (with jumpered EMERGENCY STOP contacts)	1009713					x	x
Connector housing PVC (without contacts)	1009040	x	x	x	x		
Connector housing metal (without contacts, with anti-kink protection)	1009694					x	x

		Can be used with 6FX2007-					
Coupling ring connector (for PVC connector mini HHU)	1009518	x	x	x	x		
Crimp contacts:							
Set of crimp contact sockets for PVC connector (consisting of: 10 x 0.12-0.25 mm^2, 30 x 0.20-0.56 mm^2)	1009222	x	x	x	x		
Set of crimp contact sockets for metal connector (consisting of: 30 x 0.14-1.00 mm^2)	1009723					x	x
Set of crimp contact pins for PVC connector (consisting of: 10 x 0.12-0.25 mm^2, 30 x 0.20-0.56 mm^2)	1009223	x	x	x	x		
Set of crimp contact pins for metal connector (consisting of: 30 x 0.14-1.00 mm^2)	1009724					x	x
Tool:							
Ejector for crimp socket and pin contacts, PVC connector	0080811	x	x	x	x		
Assembly tools for EMERGENCY STOP button	1009224	x	x	x	x	x	x
Pressure-cap remover for enable key	1009217	x	x				
Extraction tool for contact insulator, metal connector	1009725					x	x

Order address

R & D Steuerungstechnik GmbH + Co KG
Service department
Hocksteiner Weg 87-95
D-41189 Mönchengladbach

Tel. +49 (0) 2166–5506–34
Fax +49 (0) 2166–5506–55

25.7 Accessories

The following components are available as accessories for the mini handheld unit:

Component	Order number:	Remarks
Connection kit	6FX2006-1BG02	Flange socket made of metal with socket contacts and dummy plug for overriding the emergency stop circuit
Angle box	6FX2006-1BG55	Angle box for connection kit, metal version
Adapter plate	6FX2006-1BG44	Adapter plate for installing the metal flange socket in the plastic flange socket installlation location

Handheld unit / distributor box

26

26.1 Description

The handheld unit and the distributor box are offered in two wiring variants.

1. in the variant with a 2-channel enable key and 3-core connection of these keys,
2. in the variant with a 2-channel enable key and 4-core connection of these keys.
   In this version, monitoring for cross short-circuit in the enable circuit is possible.

Due to modified connector design, these HHUs can only be operated on the distributor box designed for the corresponding mode. In the version with 4-core connection of the enable keys, the connector insert of the connector is arranged coded at an angle of 45° to avoid destruction of the unit by accidental wrong connection.

A retaining shell is available as an accessory for B-MPI and A-MPC type HHUs. The HHU can therefore also be securely fastened to non-magnetic surfaces (see section: "Accessories").

Note

The handheld unit is designed for operation with SINUMERIK.

It cannot be used with SIMATIC.

26.2 Operator controls and indicators

26.2.1 View

Handheld unit

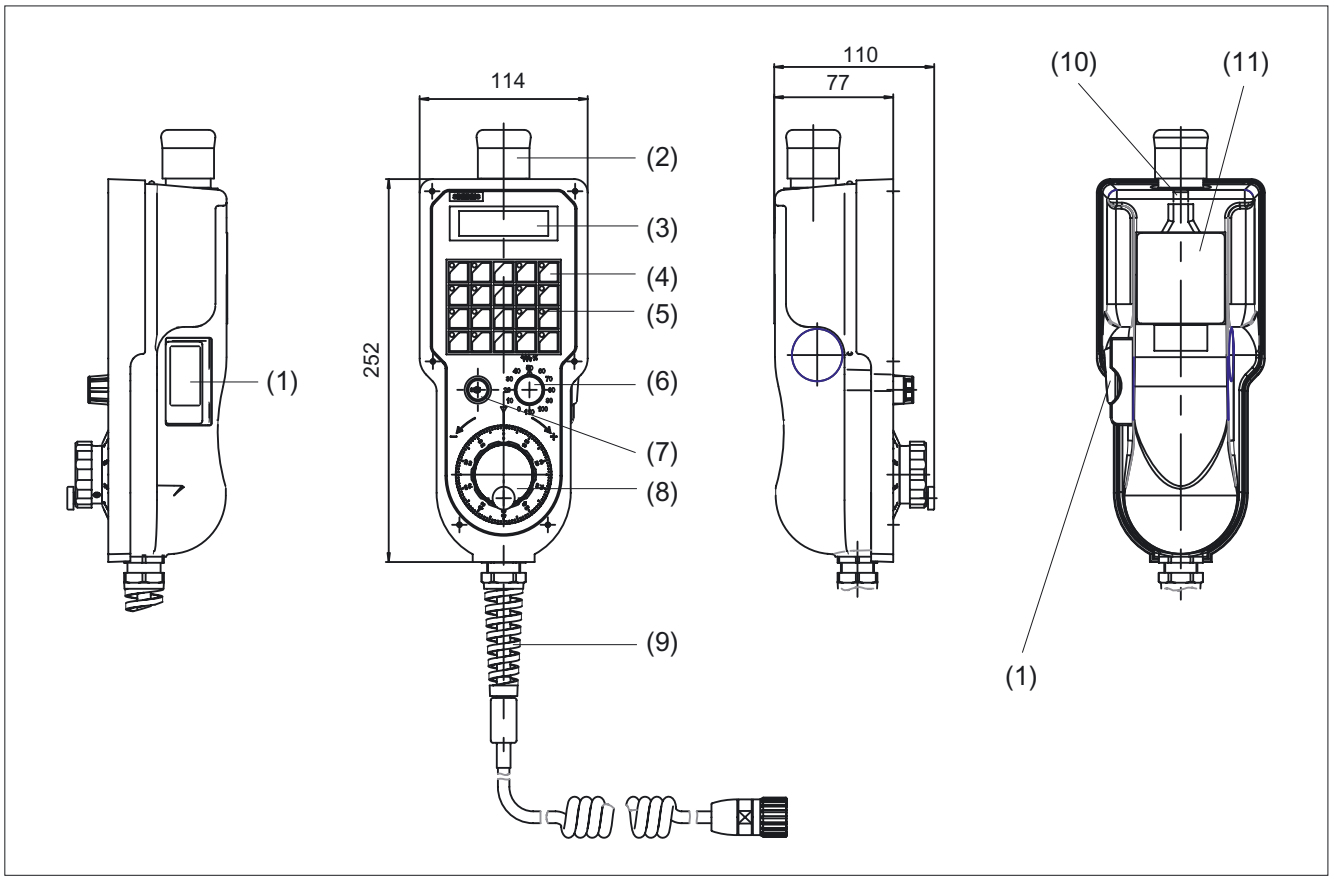

(1) 1 enabling button designed as a 3-position switch, two channels
(2) Emergency Stop button, two channels
(3) Two-line digital display 2 x 16 characters
(4) 20 keys freely assignable by user
(5) 16 LEDs freely controllable by user
(6) Override switch with 12 positions
(7) Key-switch with On/Off position
(8) Electronic handwheel
(9) Connecting cable, 10 m, or max. 3.5 m as a coiled cable
(10) Suspension lug
(11) Magnetic clamp

Key symbols

The key symbols are on a slide-in label that can be changed as necessary.

The labeling strip is located between the PCB and the front of the housing and can be accessed from the right.

Replacing labeling strips

To change the labeling strip, proceed as follows:

- Remove the labeling strip carefully to approx. halfway using flat pliers.
- Slide half of the new labeling strip under the old one.
- Remove the old labeling strip and slide the new one in to its final position.

Magnetic clamp

The magnetic clamp is not intended for permanent securing the HHU to the perpendicular sheet metal parts.

⚠ CAUTION

The HHU cannot be connected using the MPI cable 6FX 2002-4EA04-IAF0 (or other lengths) since the bus terminators are integral components of this cable. Please use the MPI cable specified in the catalog
Literature: /Z/ Catalog NCZ

If the connection between the HHU and the distributor box is interrupted (HHU cable pulled out), an emergency stop is triggered. There is no automatic EMERGENCY STOP overriding function.

26.2.2 Description

Emergency stop button, NC contact, 24V/2A contact load

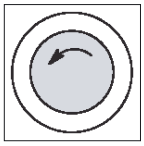

Emergency stop button
Press the red button in emergencies when

- people are at risk,
- there is the danger of machines or the workpiece being damaged.

As a rule, when operating the EMERGENCY STOP button, all drives are brought to a standstill with max. braking torque.

Turn the EMERGENCY STOP button counterclockwise to unlatch it.



Machine manufacturer
For other reactions to the EMERGENCY STOP:
refer to the machine tool manufacturer's instructions

Enabling button

The enabling button is designed as a 3-position switch and is located at the left of the handheld unit. The buttons are NO contacts. They are two-channel keys. The connection is 3- or 4-core, depending on type. A 4-core connection allows cross short-circuit monitoring in the enable circuit.

24V/2A contact load.

Handwheel

The electronic handwheel supplies two tracks with rectangular signals. The signals can be tapped from the distributor box and taken to the NCU connector X121 via the cable distributor.

Keylock switch

Keyswitch with two positions is transmitted to the PLC.

Override switch

Switch with 12 positions is transmitted to the PLC.

Keys

20 keys are transmitted to the PLC and are freely assignable by the user. The labeling symbols can be changed (unscrew HHU).

LED

16 LEDs in the keys, freely controllable via the PLC.

Digital display

2-tier digital display, each with 16 characters controlled via the PLC

Internal circuit of HHU and distributor box with 3-core connection for enabling button

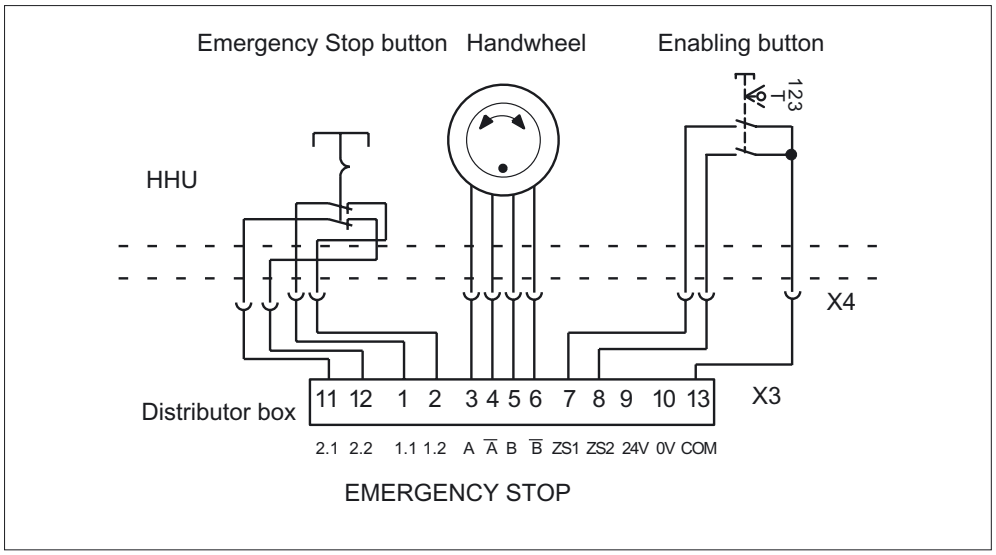

Figure 26-1 Internal circuit of EMERGENCY STOP button, handwheel, enabling buttons 3-core

Internal circuit of HHU and distributor box with 4-core connection for enabling button

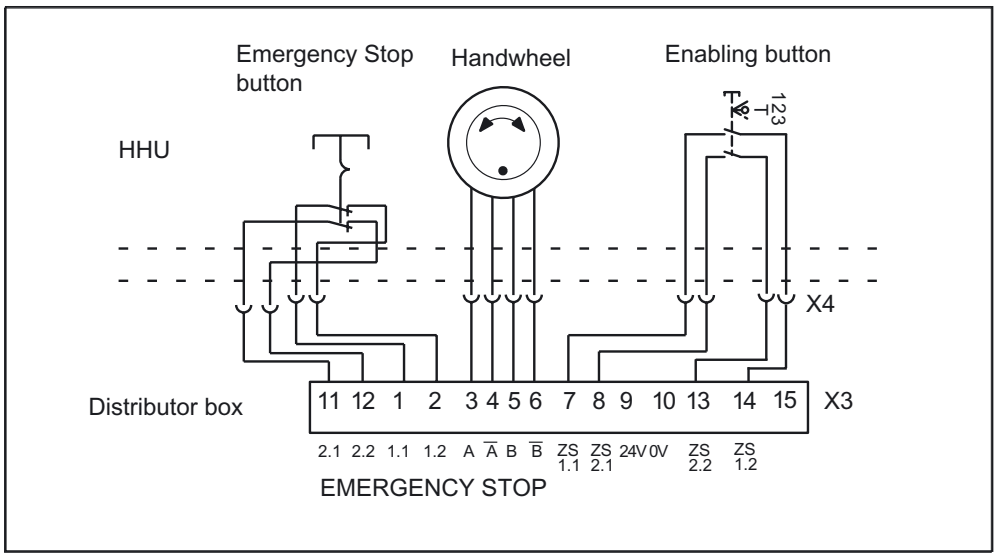

Figure 26-2 Internal circuit of EMERGENCY STOP button, handwheel; enabling buttons 4-core

26.3 Connectors

26.3.1 Connecting a device

Connecting cable

The HHU is connected to the distributor box via the connecting cable (either a coiled cable with max. length 3.5 m or a 10 m connecting cable).

Interface to distributor box

The EMERGENCY STOP button and the enable keys, as well as handwheel signals and power supply are connected to terminal block X3.

Connector to distributor box

The HHU is connected to the distributor box, connector X4. The EMERGENCY STOP button, enabling buttons and handwheel signals are not transmitted to the PLC but decoupled in the distributor box terminal block X3. Power supply to the HHU is via the distributor box. All other signals are transmitted to the PLC via the MPI/OPI bus.

Note

Bus terminating resistors are integral components of the HHU.

A maximum of two handheld units may be connected per bus segment.

Further HHUs may be connected using repeaters.

26.3.2 Connecting several devices

If more than one HHU is to be connected to a bus segment, or if the HHU cannot be connected at the end of the bus, a PROFIBUS repeater is recommended for the connection of the HHUs.

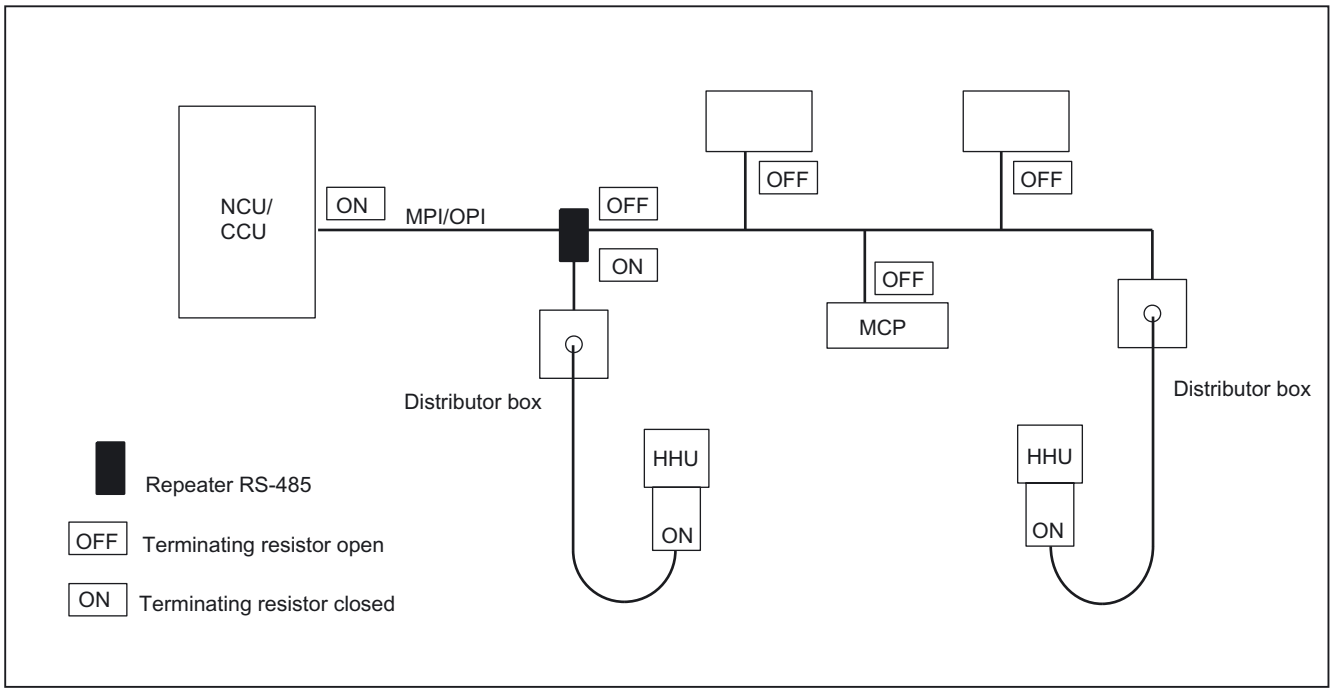

Figure 26-3 Connecting the HHU via repeater

NOTICE
The numerical control must be located at the end of the connection!

Repeater RS-485

The repeater can be ordered under Order No. 6ES7972-0AA01-0XA0.
For further information please refer to the Catalog:
/IK10/ Industrial Communication Networks SIMATIC-NET

Note

- The cable length from the repeater to the distributor box must not exceed 2 m
- Cable lengths for MPI/OPI, see /IADC/ Start-Up Guide 840D/810D, Section 3.

More information on simultaneously operating several HHUs on a NCU can be found in the function description of the main machine, part 1, section: PLC basic program (P3), paragraph: "Projectability of machine control panels, handheld unit" under the key point: "MPI switchover, OPI address."

26.4 Unplugging/plugging during operation

Trouble-free plugging and unplugging of the HHU during machine operation requires:

- activation and deactivation of the power supply to the distributor box,
- release or override of the EMERGENCY STOP switch of the HHU,
- connection of the HHU to the OPI/MPI via PROFIBUS repeater.

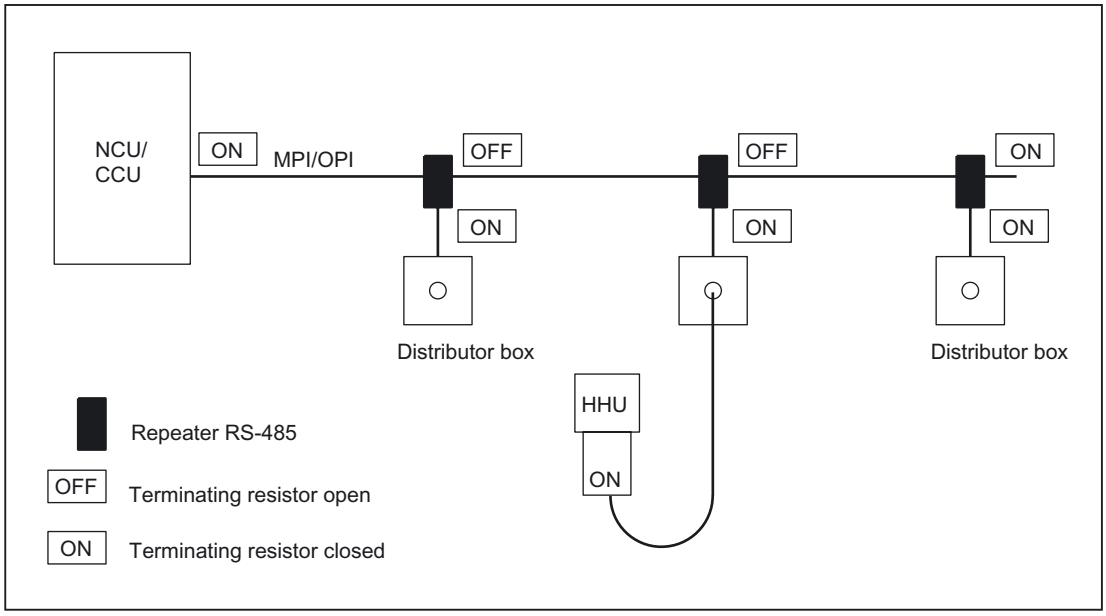

Figure 26-4 Connecting the HHU via PROFIBUS repeater

A PROFIBUS repeater must be connected upstream of the HHU distributor box for each branch. The individual bus segments (MPI/OPI line and/or the repeater and HHU) must be terminated with terminating resistors at the ends of the bus.

Repeater RS-485

The repeater can be ordered under the number 6ES7 972–0AA00–0XA0.
For more information, see catalog: /IK10/ Industrial Communication Networks SIMATIC-NET

Note

The HHU already has an installed bus terminating resistor.

The cable length from the repeater to the distributor box must not exceed 2 m.

A keyswitch with two positions and two contacts must be installed at each HHU connection point.

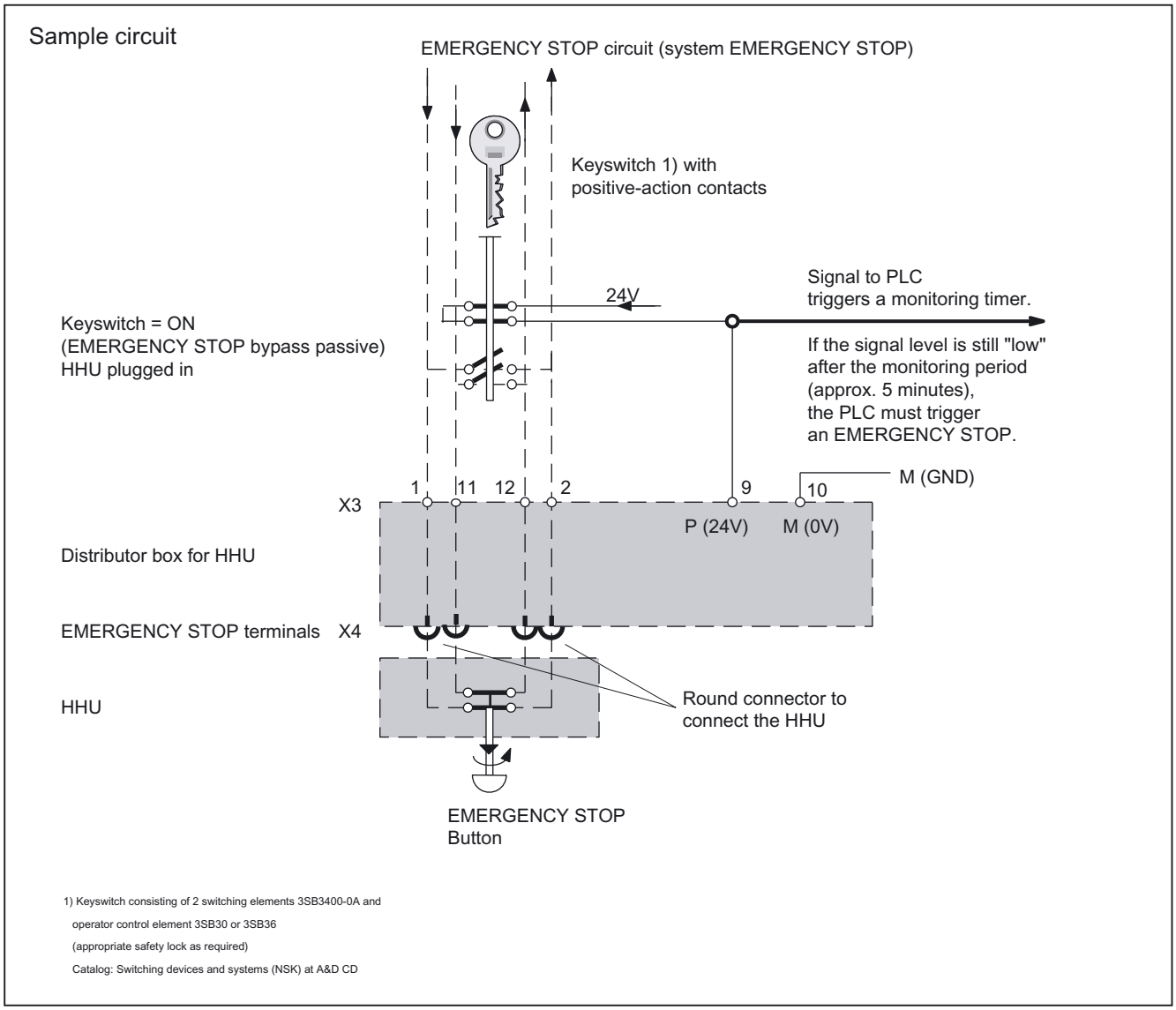

Figure 26-5 Circuit proposal for EMERGENCY STOP bridging (the "keyswitch =ON" status is indicated when the HHU is plugged in)

Note

Please note that the customer is responsible for implementing the sample circuits.

Connecting the HHU

Initial state

- Keyswitch is set to "OFF" position, HHU connection at distributor is passive.
- EMERGENCY STOP terminals to the HHU are short-circuited.
- Signal "HHU Stop" = 1 (or "HHU"=0), end communication.

1. Plug in HHU connector and screw down
   EMERGENCY STOP of HHU must be unlocked.
2. Set keyswitch to "ON", active.
   HHU becomes active.
3. Signal "HHU Stop" = 0, communication commences with the HHU.

Disconnecting the HHU

Initial state

Keyswitch is set to "ON" position, HHU connection at distributor is active (incl. EMERGENCY STOP).

Set keyswitch to "OFF," passive position.

Signal "HHU Stop" = 0 switchover to 1 (end communication).

- HHU has no voltage and goes into passive mode.
- EMERGENCY STOP of HHU is short-circuited.

1. Loosen the HHU connector and unplug it.

2. The keyswitch is required for reasons of security, to ensure that an EMERGENCY STOP is triggered if an attempt is made to activate the HHU while it is not connected.

⚠ DANGER
Emergency stop switches that are inactive **• should not be detected as such or** **• should not be accessible** This is to prevent the emergency stop button (e.g. on the HHU) from being used inadvertently.

26.5 Commissioning

26.5.1 Settings in handheld unit

Displaying the HHU's software version

The software version of the HHU is displayed after booting as long as the HHU is not communicating with the PLC.

Example: HHU display

Waiting for PLC

V04.01.01 F / 1.5 M *)

→ SW version of HHU is V04.01.01
→ Bus address of HHU is F_{hex} (15_{dec})
→ Baud rate of HHU is 1.5 MBaud

*) Display changes between F and 1.5 M

DIP switch

To set the bus parameters and the IDLE time, two quadruple DIP switches are provided on the basic module of the HHU.

The HHU must be opened for access to the DIP switches.

Note

Open the device only if the HHU connector has been previously removed!

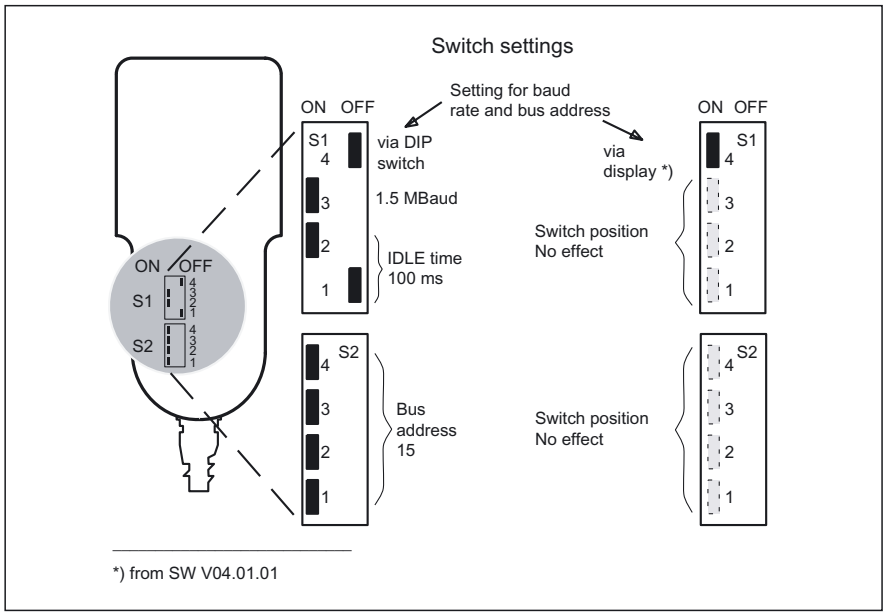

Figure 26-6 DIP switches in the HHU

Meaning of DIP switches

Table 26-1 Settings on switches S1 and S2 in HHU

Meaning		S1 1	S1 2	S1 3	S1 4	S2 1	S2 2	S2 3	S2 4
Baud rate and bus address setting	via display (only SW 4.1.1)				on				
	via DIP switches (all SW versions				off				
IDLE time *)	100 ms	off	on						
Baud rate	1.5 Mbaud			on					
	187.5 kbaud			off					
Bus address *)	15					on	on	on	on
	14					on	on	on	off
	13					on	on	off	on
	12					on	on	off	off
	11					on	off	on	on
	10					on	off	on	off
	9					on	off	off	on
	8					on	off	off	off
	7					off	on	on	on
	6					off	on	on	off
	5					off	on	off	on
	4					off	on	off	off
	3					off	off	on	on
	2					off	off	on	off
	1					off	off	off	on
	0					off	off	off	off
Delivery condition (default)	SW V01.01.02	off	on	on	off	on	on	on	on
	SW V04.01.01	off	on	on	on	on	on	on	on

*) If S1.4 = **on** and SW version ≥ V04.01.01: Switch has no function

Note

The maximum possible transmission rate for SINUMERIK 810D is 187.5 kbaud. Therefore set switch S1.3 to "off" before start-up.

With switch position S1.4 = **on** and software version ≥ V04.01.01, bus addresses from 0 to 31 can be set, i.e. up to 32 nodes can be supported on the OPI/MOI.

Bus addresses that are already assigned are preceded by the * character on the display.

26.5.2 Configuring

It is necessary to set the GD parameters for the sub module to communicate via the MPI interface. The setting can be undertaken during the powering up phase (while waiting for the first GD telegram) of the the PLC (”Waiting for PLC” status) via the HHU interface using the key combination

 Jog (top left, outside) and 

T2 (top right, outside) are activated. The individual parameters are then interrogated via the HHU display and entered via the HHU keyboard.

The default values can be changed within the permissible value range by means of keys + and -.

The Automatic  key selects the next parameter. Selection of the next parameter causes the preceding parameter to be stored in the flash EPROM. The parameters need therefore only be set during start-up and when interfaces are changed. If interface parameter assignment is not activated after power On, the stored values are accepted or the default values (see table) are loaded.

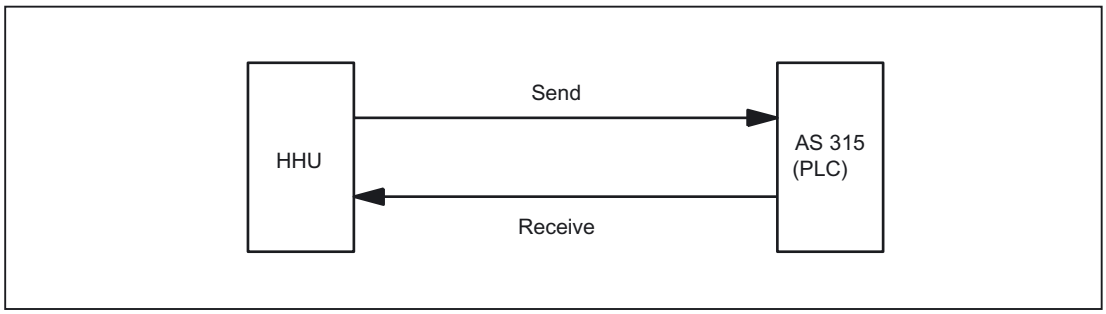

Figure 26-7 Sending and receiving seen from the HHU

Meaning of GD parameters

There are separate GD parameters for sending and receiving.

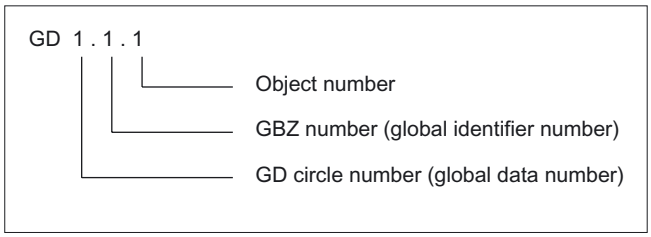

Figure 26-8 Meaning of GD parameters

Note

The GD parameters of the HHU and AS315 or PLC block FB1/0B100 must be set identically.

	Name	Display	Default value	Range of values
	Receive GD circle no.	Rec–GD–No:	2	1–16
	Receive global identifier number	Rec–GI–No	1	- (fixed)
	Object number for receive global identifier number	Rec–Obj–No:	1	- (fixed)
	Transmit GD circle no.	Transmit–GD–No:	2	- (fixed)
	Transmit GI no.	Transmit–GI–No:	2	- (fixed)
	Object number for send global identifier number	Transmit–Obj–No:	1	- (fixed)
SW 4 and higher	Baud rate	Baud rate:	1.5 M (Baud)	187,5 / 1.5 M
	Bus address	Bus address:	15	0–31

26.5.3 Interface signals

PLC module

The FC13 "HHUDisp" supports operation of the LCD display. For a detailed description, please refer to:

Literature: /FB/, P3, "Basic PLC Program".

Note

The customer is responsible for programming the transfer of key signals to the interface in a PLC user program.

User interface

Layout of keys and LEDs

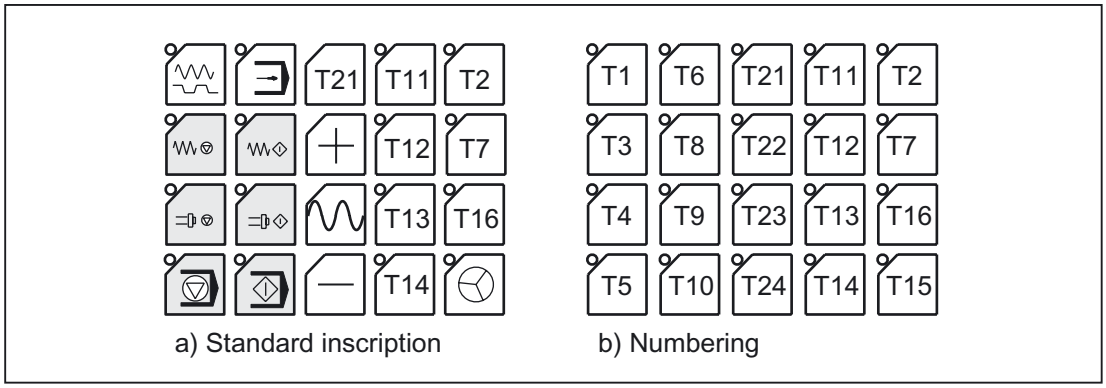

Figure 26-9 HHU control keys

Input image of handheld unit

You can tap the signals for the keys, feed rate override switch, keyswitch and acknowledgment of the digital display at the input area. The address range is set by parameter assignment with STEP7 tools.

Byte no.	**Input signals to PLC**							
Byte	Bit7	Bit 6	Bit 5	Bit 4	Bit 3	Bit 2	Bit 1	Bit 0
EB m	Reserved	Reserved	Reserved	Reserved	Reserved	Reserved	Reserved	Reserved
EB m + 1	Reserved	Reserved	Reserved	Reserved	Reserved	Reserved	Reserved	Reserved
EB m +2	Feed start T8	Free key T7	AUTO-MATIC T6	NC stop T5	Spindle stop T4	Feed stop T3	Free key T2	JOG T1
EB m +3	Free key T16	Hand wheel T15	Free key T14	Free key T13	Free key T12	Free key T11	NC start T10	Spindle start T9
EB m +4	Direction key - T24	Rapid transverse override T23	Direction key + T22	Free key T21				
EB m +5	Acknowledgement digital display	Keyswitch	Rapid traverse/feed rate override switch					
			E	D	C	B	O	

HHU rotary switch positions

Setting	%	EDCBA
1	0	00001
2	10	00100
3	20	01100
4	30	01101
5	40	01111
6	50	01110
7	60	01010
8	70	01011
9	80	01000
10	90	11001
11	100	11010
12	110	11111

HHU keyswitch

– → 0 (horizontal position)

– → 1 (vertical position)

Output image of handheld unit

The signals for controlling the LEDs, HHU mode, display signals and digital display are present at the output area.

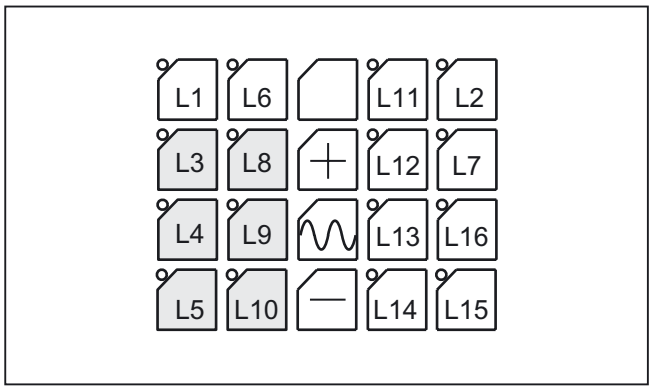

Figure 26-10 Control keys with integrated LEDs in HHU

Byte no.	Output signals to PLC							
Byte	Bit 7	Bit 6	Bit 5	Bit 4	Bit 3	Bit 2	Bit 1	Bit 0
AB m	1							
AB m + 1	New data for selected line							Selection line
AB m +2	L8	L7	L6	L5	L4	L3	L2	L1
AB m +3	L16	L15	L14	L13	L12	L11	L10	L9

Lx = 1 → LED lights up

Output image of digital display

Control of the digital display in the HHU

Byte no.	Output signals to HHU							
Byte	Bit 7	Bit 6	Bit 5	Bit 4	Bit 3	Bit 2	Bit 1	Bit 0
AB m +4	Default setting of 1st character (right) of selected line							
AB m +5	Default setting of 2nd character of selected line							
AB m +6	Default setting of 3rd character of selected line							
AB m +7	Default setting of 4th character of selected line							
AB m +8	Default setting of 5th character of selected line							
AB m +9	Default setting of 6th character of selected line							
AB m +10	Default setting of 7th character of selected line							
AB m +11	Default setting of 8th character of selected line							
AB m +12	Default setting of 9th character of selected line							
AB m +13	Default setting of 10th character of selected line							
AB m +14	Default setting of 11th character of selected line							
AB	Default setting of 12th character of selected line							

Byte no.	Output signals to HHU							
m +15								
AB m +16	Default setting of 13th character of selected line							
AB m +17	Default setting of 14th character of selected line							
AB m +18	Default setting of 15th character of selected line							
AB m +19	Default setting of 16th character (left) of selected line							

Note

Output byte ABm bit 7 must always have the value 1!
This sets the display's output mode.

Display

The digital display is used as a 2-line alphanumeric display with 16 digits per line.

The display data is coded according to the character set given in the ASCII code table for the digital display via the QBm + 4...19 bytes. The decimal point is a separate character. The display always starts line by line right-justified with the byte QBm + 4 and is built up towards the left up to QBm + 19.

Selecting the line

ABm + 1, bit 0
This bit is used to select the line to be written.
Bit 0 = 0: The 1st line is selected
Bit 0 = 1: The 2nd line is selected.

New data for selected line

ABm + 1, bit 7
This bit is used to request writing in of new data into a line. The bit is set by the user program and can be reset on detection of the acknowledgment bit IBm + 5, bit 7.
Bit 7 = 0: Reset request.
Bit 7 = 1: Set request

Acknowledgement digital display

EBm + 5, bit 7
This bit is set by the system after the new data has been accepted.
Bit 7 = 0: No new data
Bit 7 = 1: New data has been accepted

Example of signal chart

Example of a signal chart when writing data for two lines

1. Selecting the line with QBm + 1, bit 0.
2. Writing new data with QBm + 4...19.
3. Set request: New data for selected line QBm + 1, bit
4. Acknowledgment digital display IBm + 5, bit 7, via system.
5. Reset request

Note

The request must be reset before a new line is written!

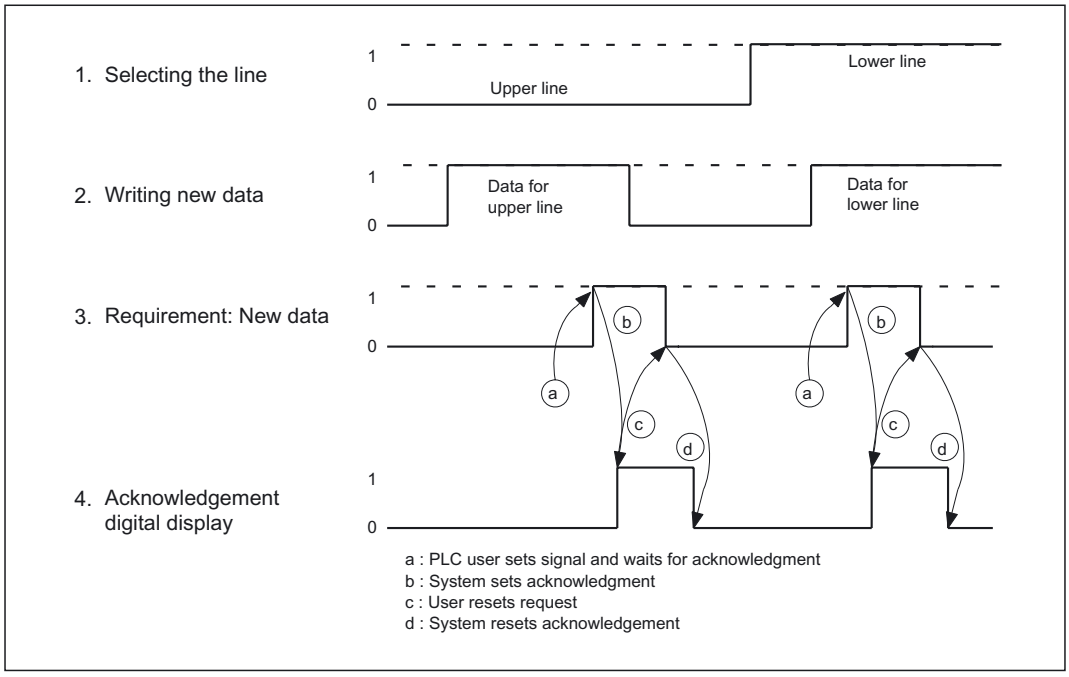

Figure 26-11 Signal chart example for writing data into the HHU display

ASCII code for digital display

Representation of characters on specifying the corresponding bit pattern or hexadecimal format in the bytes QBm + 4...19. The characters from Hex 20 to Hex 7F are default values.

0010	0011	0100	0101	0110	0111	1010	1011	1100	1101	1110	1111	²← Bits 7... 4
20H	30H	40H	50H	60H	70H	A0H	B0H	C0H	D0H	E0H	F0H	Bit 3 0 ↓ 0000
		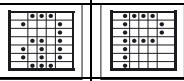										
21H	31H	41H	51H	61H	71H	A1H	B1H	C1H	D1H	E1H	F1H	0001
												
22H	32H	42H	52H	62H	72H	A2H	B2H	C2H	D2H	E2H	F2H	0010
												
23H	33H	43H	53H	63H	73H	A3H	B3H	C3H	D3H	E3H	F3H	0011
												
24H	34H	44H	54H	64H	74H	A4H	B4H	C4H	D4H	E4H	F4H	0100
25H	35H	45H	55H	65H	75H	A5H	B5H	C5H	D5H	E5H	F5H	0101
26H	36H	46H	56H	66H	76H	A6H	B6H	C6H	D6H	E6H	F6H	0110
27H	37H	47H	57H	67H	77H	A7H	B7H	C7H	D7H	E7H	F7H	0111
28H	38H	48H	58H	68H	78H	A8H	B8H	C8H	D8H	E8H	F8H	1000
29H	39H	49H	59H	69H	79H	A9H	B9H	C9H	D9H	E9H	F9H	1001
2AH	3AH	4AH	5AH	6AH	7AH	AAH	BAH	CAH	DAH	EAH	FAH	1010
2BH	3BH	4BH	5BH	6BH	7BH	ABH	BBH	CBH	DBH	EBH	FBH	1011
2CH	3CH	4CH	5CH	6CH	7CH	ACH	BCH	CCH	DCH	ECH	FCH	

												1100
2DH	3DH	4DH	5DH	6DH	7DH	ADH	BDH	CDH	DDH	EDH	FDH	
												1101
2EH	3EH	4EH	5EH	6EH	7EH	AEH	BEH	CEH	DEH	EEH	FEH	
												1110
2FH	3FH	4FH	5FH	6FH	7FH	AFH	BFH	CFH	DFH	EFH	FFH	
												1111

26.6 Distributor box for handheld unit

26.6.1 Overview

Distributor box and HHU

The handheld unit is connected to the distributor box
The distributor box is intended for mounting in the switch cabinet or in a separate casing.
The distributor box has an interface to the MPI bus and a terminal block for connecting EMERGENCY STOPS, enabling buttons, handwheels and the 24V power supply.
The equipotential bonding connector is also arranged at the distributor box. Equipotential bonding has to be made using a low-resistance connection between the distributor box and the ground potential. The equipotential bonding conductor should be a stranded cable having a cross-section of at least 10 mm^2 and a length of < 30 cm.

Literature: /PHF/ Configuring, Manual
/PHD/ Configuring, Manual

Versions of the distributor box

The distributor box is available both in standard version and in a UL-certified version.
The UL-certified distributor box with power limitation is only needed for UL-conform HPU operations because this does not have UL certification.

The HHUs are UL-certified and can therefore be operated on standard distributor boxes.

The distributor box must be designed for 3-core or 4-core connection of the enabling keys, depending on the HHU used.

26.6.2 Interfaces

Location of the interfaces

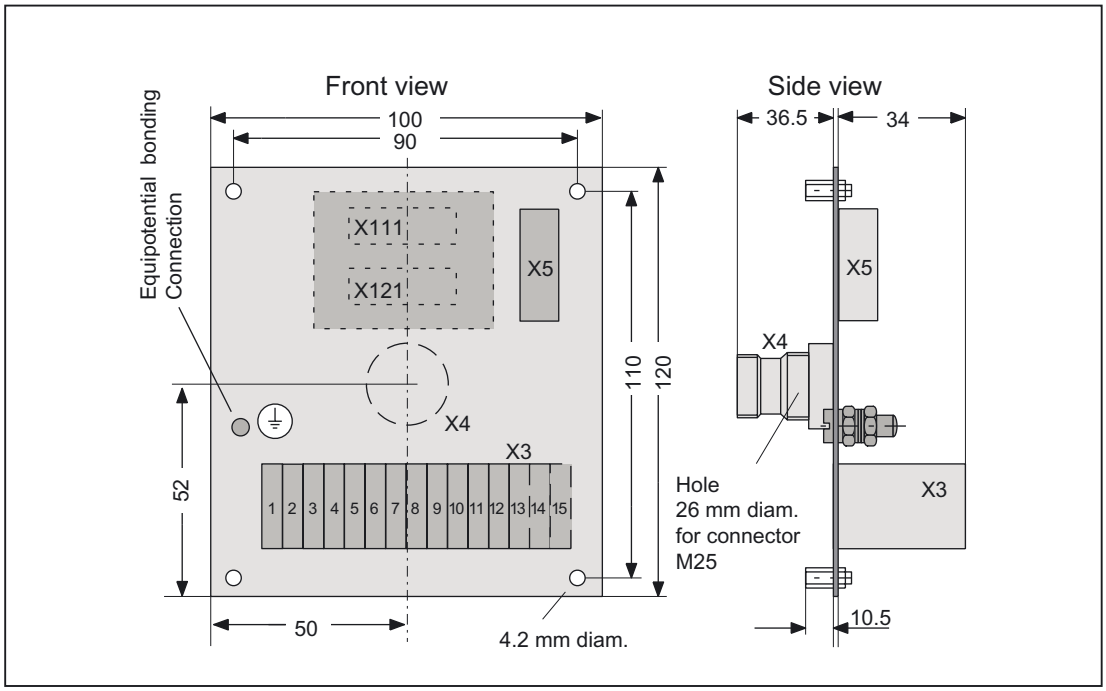

Figure 26-12 Distributor box for MPI and MPC bus

X111 and X121 only present for 3-core connection version of enabling buttons.
X3/term. 14/15 only present for 4-core connection version of enabling buttons.

X111, X121

To connect to the MPC line.
The distributor box can be used for the MPI bus or MPC bus.

X3

Terminal block for HHU control elements

Terminal block designation: **X3**
Terminal strip: Terminals for 1.5 mm^2

Table 26-2 Assignment of terminal block X3 with enabling key, 3-core

Pin	Signal name	Signal type
1	Emergency stop button 1.1 (24V, 2A)	I, input
2	Emergency stop button 1.2 (24V, 2A)	O, output
3 / 4	Handwheel track A / handwheel track A	I/O, bi-directional
5 / 6	Handwheel track B / handwheel track B	
7 / 8	Enabling button ZS1 (24V, 2A) / Enabling button ZS2 (24V, 2A)	O, output
9	24V (power supply for HHU)	I, input
10	0V (M_{ext} for HHU)	
11	Emergency stop button 2.1 (24V, 1A)	
12	Emergency stop button 2.2 (24V, 1A)	O, output
13	Enabling button (24V, 2A)	I, input

Table 26-3 Signal assignment of terminal block X3 with enabling button, 4-core

Pin	Signal name	Signal type
1	Emergency stop button 1.1 (24V, 2A)	I, input
2	Emergency stop button 1.2 (24V, 2A)	O, output
3 / 4	Handwheel track A / handwheel track A	I/O, bi-directional
5 / 6	Handwheel track B / handwheel track B	
7 / 8	Enabling button ZS1 (24V, 2A) / Enabling button ZS2 (24V, 2A)	O, output
9	24V (power supply for HHU)	I, input
10	0V (M_{ext} for HHU)	
11	Emergency stop button 2.1 (24V, 1A)	
12	Emergency stop button 2.2 (24V, 1A)	O, output
13 / 14	Enabling button ZS 2.2 / Enabling button ZS 1.2	I, input
15	Key 2	Do not use

X4

HHU interface

Connector designation:	**X4**
Plug-connector type:	Round connector for screw connection
Special feature:	Interface must comply with IP54

Signal names

Emergency stop button
Emergency stop button
Grounding conductor
Enabling button
Enabling button
+24V
0V
Handwheel track A
Handwheel track A
Handwheel track B
Handwheel track B
MPI bus cables

X5

MPI interface

Connector designation:	**X5**
Plug-connector type:	9-pin Sub-D socket connector
Max. cable length	200 m
Special feature:	Electrical isolation

Table 26-4 Assignment of connector X5

Pin	Signal name	Signal type
1 / 2	Do not use	
3	RS_KP	B
4	RTSAS_KP	O
5	M (GND)	VO
6	P5	VO
7	Do not use	
8	XRS_KP	B
9	RTSPG_KP	I

Signal names

RS_KP, XRS_KP differential RS485 data – K-bus from PLC
RTSAS_KP Request to Send AS – K-bus from PLC
RTSPG_KP Request to Send PG – K-bus from PLC
M ground
P5 5 V

Signal type

B Bi-directional
O Output
I Input
VO Voltage Output

EMC measures

The interference currents are grounded via the shield plates. To prevent these discharged currents from becoming a source of interference themselves, make sure that the path of the interference currents to ground is of low-resistance.

- Securely tighten all retaining screws of cable connectors, modules and cables referred to a potential.
- Make sure that all contacting areas of cables referred to a potential are protected against corrosion.
- Use short potential reference cables of < 30cm and a cross section of 10 mm2.
- In order to avoid capacitive charges on unused cable cores, the unused cores of the EMERGENCY STOP and enabling buttons (terminals NAUS1.1, NAUS1.2, NAUS2.1, NAUS2.2, ZS1, ZS2, ZUSTICO) must be connected to the equipotential bonding terminal.

26.6.3 Mounting

The HHU is connected to the distributor box via the X4 screw connection.
When producing a hole (e.g. in a casing) for the X4 screw connection, degree of protection IP54 must be ensured.

26.6.4 Connections

Connecting the 24VDC power supply

The 24VDC power supply is connected to terminal block X3, terminals 9 and 10.

Connecting the MPI bus or OPI

The distributor box is connected to the relevant interface (e.g. to the MPI bus for FM-NC, 810D, 840D or to the OPI - possible only for 840D) via the X5 MPI bus connection.

Emergency stop key connection

The first channel of the emergency stop key is connected to terminal block X3, terminals 1 and 2.
The second channel of the emergency stop key is connected to terminal block X3, terminals 11 and 12.

Handwheel connection

The electronic handwheel can be connected to terminal block X3, terminals 3 to 6.
If the handwheel is to be connected to the NCU, a connection must be made to the cable distributor.

Enabling button connection

The enabling button is connected to terminal block X3.

Equipotential connection

Equipotential bonding has to be made using a low-resistance connection between the distributor box and the ground potential. The equipotential bonding cable should be a stranded cable having a cross-section of at least 10 mm2 and a length of < 30 cm.

⚠ CAUTION

The 2nd channel of the EMERGENCY STOP circuit may be connected only if a 2-channel handheld unit is used, namely

6FX2007-1AC01 or 6FX2007-1AC11 and
6FX2007-1AC02 or 6FX2007-1AC12 and
6FX2007-1AC03 or 6FX2007-1AC13 and
6FX2007-1AE03 or 6FX2007-1AE13

26.7 Technical data

Table 26-5 Handheld unit

Electrical data			
Power supply	24V		
Power consumption approx.	250 mA		
Emergency Stop button	24 V	2 A	NC contact
Enabling button designed as 3-position switch	24 V	2 A	2 parallel NO contacts
Electrical handwheel	2 tracks	500 mA	TTL level
General data			
Keylock switch	2 positions		ON/OFF
Override switch	12 positions		
Connecting cable	3.5m or 10m long		
Mechanical data			
Dimensions	Height	Width	Depth
	252 mm	114 mm	110 mm
Weight	1.2 kg without connecting cable		
Ambient conditions			
Temperature ranges		Application/operation	Storage/transport
		0 ... 55 °C	-20 ... 60 °C
Temperature change	within 1 minute max. 0.2 K		
Permissible change in relative humidity EN 60721-3-3, Class 3K5			
Within 1 minute	max. 0.1%		
Protective class		IP65	

26.8 Spare parts

The following spare parts are available:

Name	Length	Plug connector	Coding	Remarks	Euchner ident no. order no.
Coiled cable	3.5 m	17-pin	0 °	for 6FX2007–1AB03 for 6FX2007–1AC03	075384
			45 °	for 6FX2007–1AE03	078999
Straight cable	10 m	17-pin	0 °	for 6FX2007–1AB13 for 6FX2007–1AC13	075385
			45 °	for 6FX2007–1AE13	079000
Terminator with chain		17-pin	0 °	for 6FX2006–1BC01 for 6FX2006–1BF00	072764
Terminator with chain		17-pin	45 °	for 6FX2006–1BH01	078952
Keylock switch				Complete	072604
Spare key for				Key-operated switch	075387
Emergency stop button, unlocked by twisting with 1 opener contact				Replacement for old HHUs 6FX2007-1Axx0	052958
EMERGENCY STOP switch, pull to reset, 2-channel, tamper-proof				Replacement for new HHUs 6FX2007-1Axx1 and the following	073985
Handwheel (encoder HKD100V100A05)				with ribbon connection cable	057036
Setting wheel C1702 (operating wheel)				for handwheel	071380
Cover for				keyboard	075772
Slide-in labels				Block: 1x printed, 1x not printed	075909
Override stepper switch, 12-way				gray-coded	077097
Rotary button for override stepper switch				with arrow dial	073973
Cover diaphragm for enabling button, 2 stages				2 x	055419
Enabling button, 3-positions					095256

For detailed description, see Prodis, article no. 186 519 26 from 07.12.2004.

Order address

Euchner GmbH + Co
Vertrieb Technik
Kohlhammerstr. 16
D-70771 Leinfelden-Echterdingen

Phone: +49 711 7597-0
Fax: +49 711 7597 303

26.9 Accessories

The following components are available as accessories for this HHU:

Component	Order number	Remarks
Retaining shell	6FX2006-1HA00	Polystyrene, black, weight: 0.3 kg

The retaining shell is secured to the mounting face by four M5 countersunk screws (not included in delivery kit).

Dimension drawing

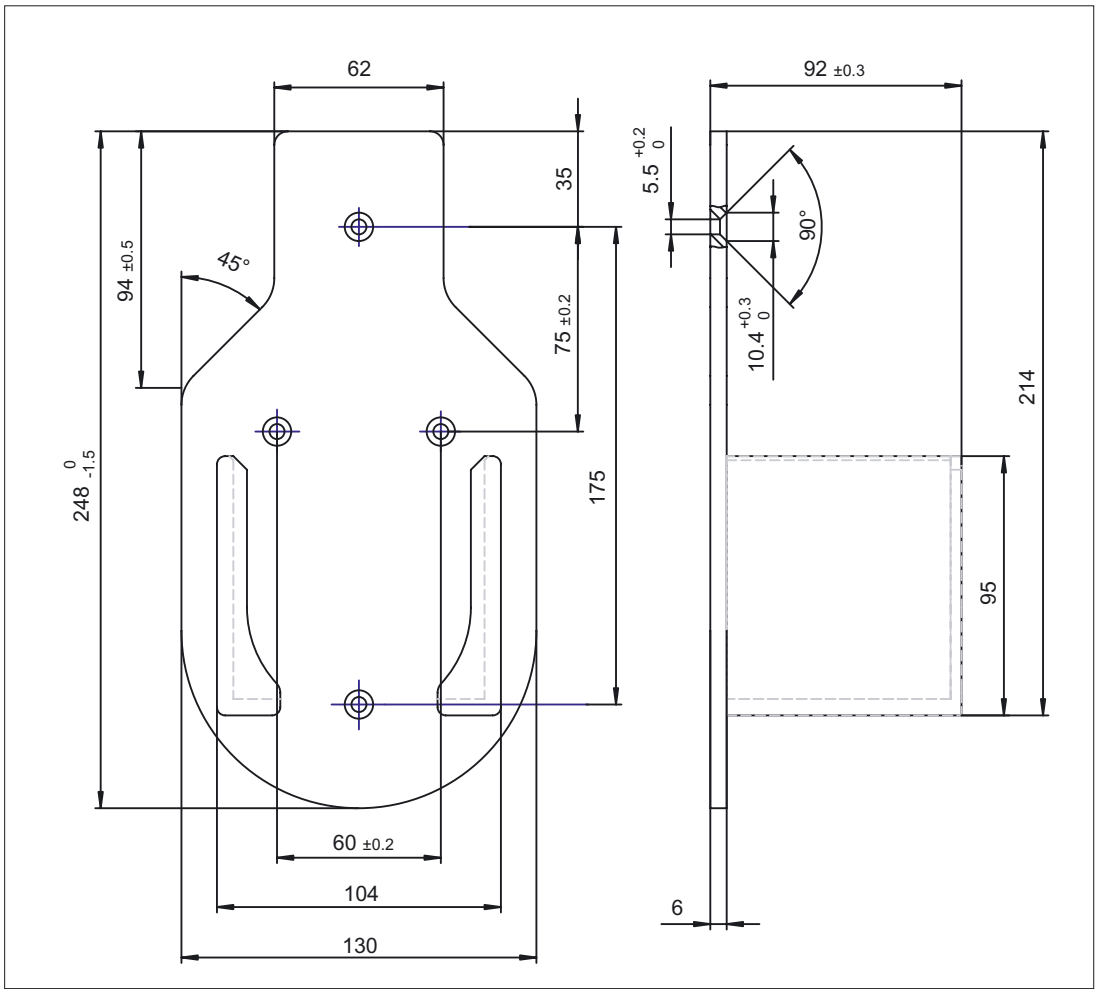

Figure 26-13 Retaining shell for HHU

Machine control panel: MCP 483C

27

27.1 Description

The machine control panel permits user-friendly control of machine functions. It is suitable for machine-level operation of milling, turning, grinding and special machines.

All keys are designed with replaceable caps for machine-specific adaptations. The covers can be freely inscribed using laser. Clear key covers can be used as an alternative.

The machine control panel is mounted from the rear with special clamping elements supplied with the panel.

Validity

The description applies to the following machine control panels:

Type	Key type	Order No.:
MCP 483C	Mechanical	6FC5203–AF22–0AA2

Features

- Operating modes and function keys
  - 50 keys with LEDs
  - Direction keys for milling machines with rapid traverse override (key covers for direction keys for turning machines supplied separately packaged)
  - Default key assignment includes 17 freely assignable customer keys
- Spindle control with spindle (rotary switch with 16 positions)
- Feed control with feed (rotary switch with 23 positions)
- Keyswitch (4 positions and 3 different keys)
- Emergency-off pushbutton (2 NC contacts)
- Ports: MPI
- Expansion slots: 2 slots for control devices (d = 16 mm)
- Key type: Mechanical keys

"Turning" version

Key cap covers for the Turning version are supplied separately packaged (see Section: “Accessories”).

27.2 Operator controls and indicators

27.2.1 Front

Overview

- 64 inputs (50 keys, two rotary selector switches, keyswitch with four positions)
- 48 outputs (LEDs, assigned to the keys)

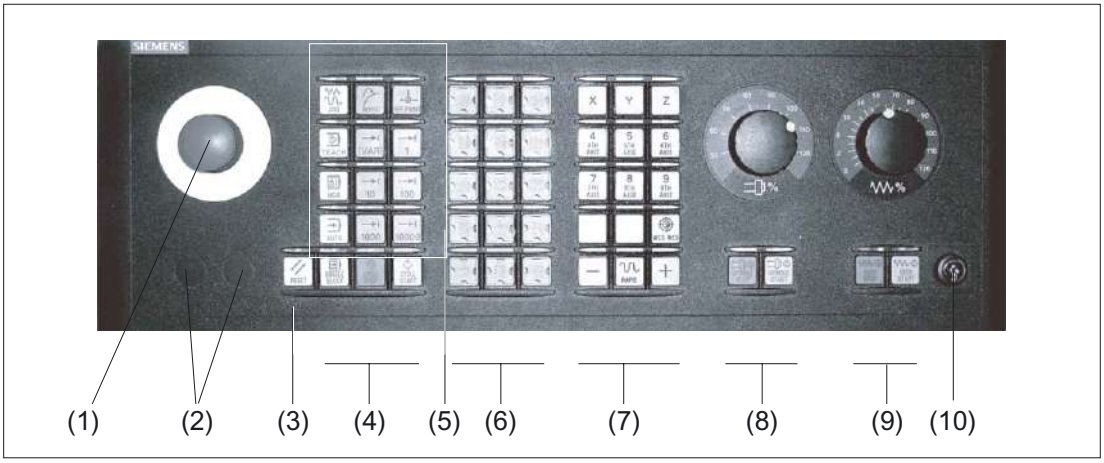

Figure 27-1 Front view of machine control panel (milling version)

(1) EMERGENCY STOP key
(2) Installation locations for control devices (d = 16 mm)
(3) Reset button
(4) Program control
(5) Operating modes, machine functions
(6) User keys T1 to T15
(7) Direction keys with rapid traverse override (R1 to R15)
(8) Spindle control with override switch
(9) Feed control with override switch
(10) Keyswitch (four positions)

EMERGENCY STOP button

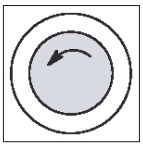

Emergency stop button
Press the red button in emergencies when

- people are at risk,
- there is the danger of machines or the workpiece being damaged.

As a rule, when operating the EMERGENCY STOP button, all drives are brought to a standstill with max. braking torque.

Turn the emergency stop button counterclockwise to unlatch it.



Machine manufacturer
For other reactions to the EMERGENCY STOP:
refer to the machine tool manufacturer's instructions

Circuit for EMERGENCY STOP button

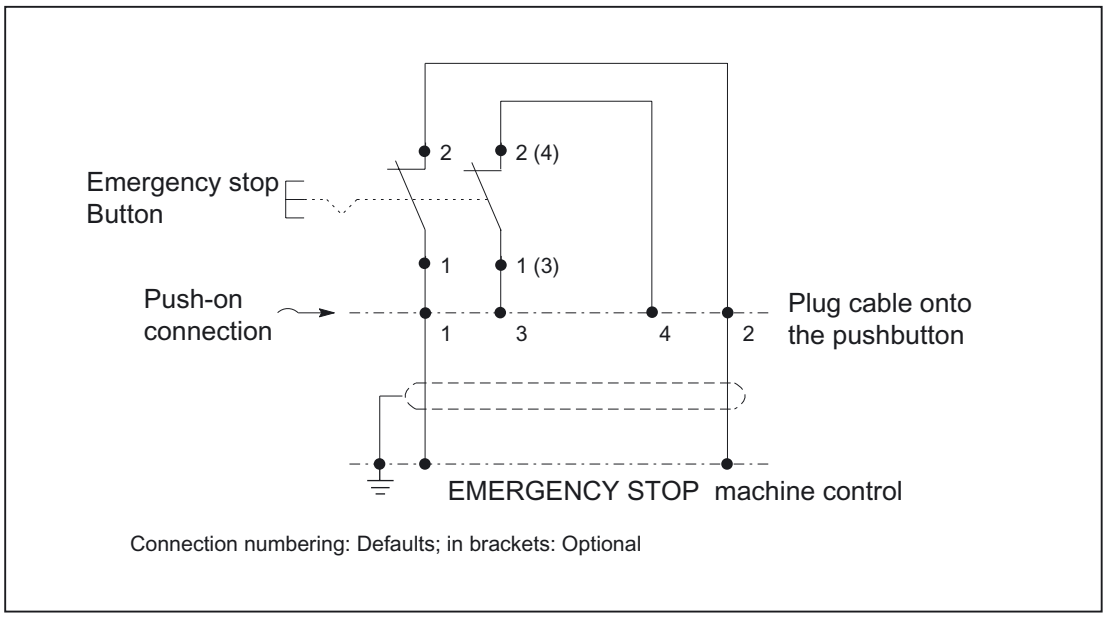

Figure 27-2 Suggested circuit for EMERGENCY STOP circuit

Mounting slots for control devices

⚠WARNING

The openings for mounting control devices (2) in Fig.: "Front view of machine control panel" must not be knocked out (risk of damage), but drilled to the required width.

27.2.2 Rear side

Operating and display elements are located on the rear of the panel:

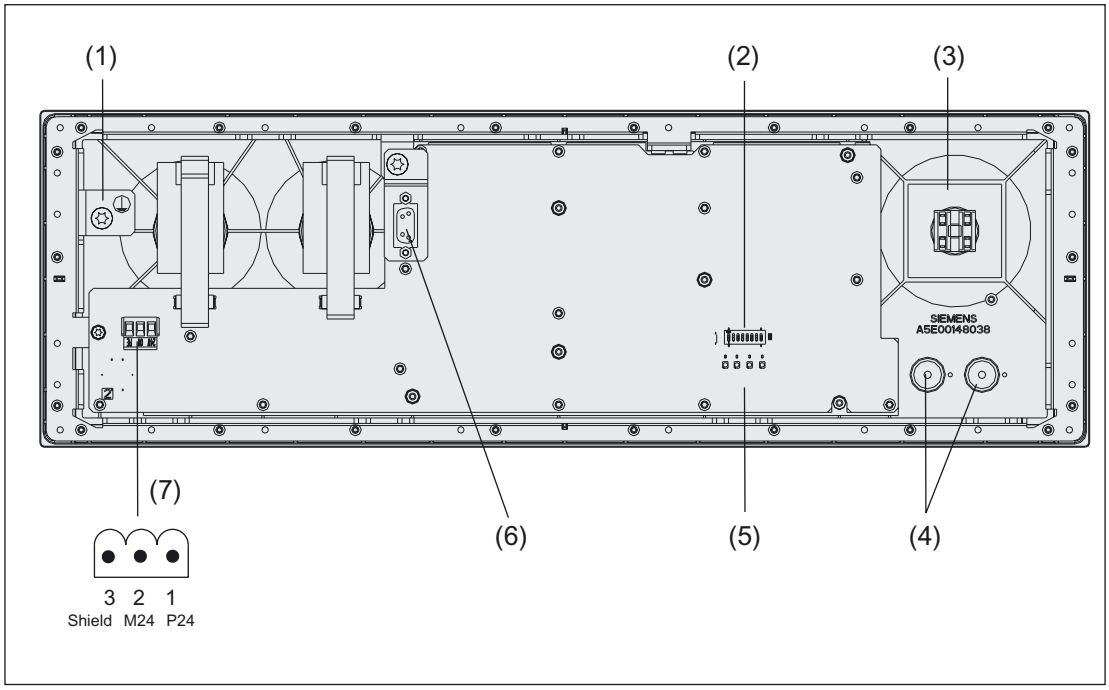

Figure 27-3 Interfaces, operating and display elements on rear of MCP 483C

(1) Customer grounding terminal
(2) S3 DIP switch
(3) EMERGENCY STOP key
(4) Slot for 2 additional control devices (16 mm)
(5) LED 1 ... 4
(6) Operator panel interface (MPI) X20
(7) Power supply interface X10

S3 DIP switch

Sets e.g. baud rate, addresses and protocol (see section: "Settings")

Diagnostic LEDs 1 ... 4

- LED1 (H1): Hardware test running. A red LED lights up to indicate a fault.
- LED2 (H2): Temperature monitor: When the temperature of 60 °C (+/- 3°C) is exceeded, a red LED lights up.
- LED3 (H3): Voltage monitoring responded
- LED4 (H4): During data transfer via the operator panel interfaces, a yellow LED flashes.

27.3 Interfaces

Overview

- X10: Power supply interface
  Phoenix terminal block: 3-pole, straight
- X20: Operator panel interface (MPI)
  Socket: 9-pole female Sub-D connector strip, straight
- X30: Interface for rotary switch feed override
  Plug connector, 2 x 5-pole, with lock
- X31: Interface for rotary switch spindle override
  Plug connector, 2 x 5-pole, with lock

References: /PHF/, NCU 570
/PHD/, NCU 571 Manual

Power supply interface

Connector designation: **X10**
Type: 3-pole Phoenix terminal block, straight

Table 27-1 X10 pin assignments

	Pin	Name	Meaning	Type
	1	P24	24V potential	V power supply
	2	M24	Ground 24V	
	3	SHIELD	Shield connection	

Operator panel front interface (MPI)

Connector designation:	**X20**
Type:	9-pole sub-D socket
Max. cable length:	200 m at 1.5 Mbaud (MPI connection)

Table 27-2 X20 pin assignments for machine control panel

Pin	Name	Type	Meaning
1 / 2	unassigned	-	-
3	RS_OPI	B	Differential RS-485 data
4	ORTSAS_OPI	O	Out Request to Send AS (not connected)
5	M5EXT	V	5 V external ground
6	P5EXT	V	5 V external potential
7	unassigned	-	_
8	XRS_OPI	B	Differential RS-485 data
9	IRTSPG_OPI	I	In Request to Send PG

Signal type

B Bi-directional
O Output
V Voltage (supply voltage)
I Input

27.4 Mounting

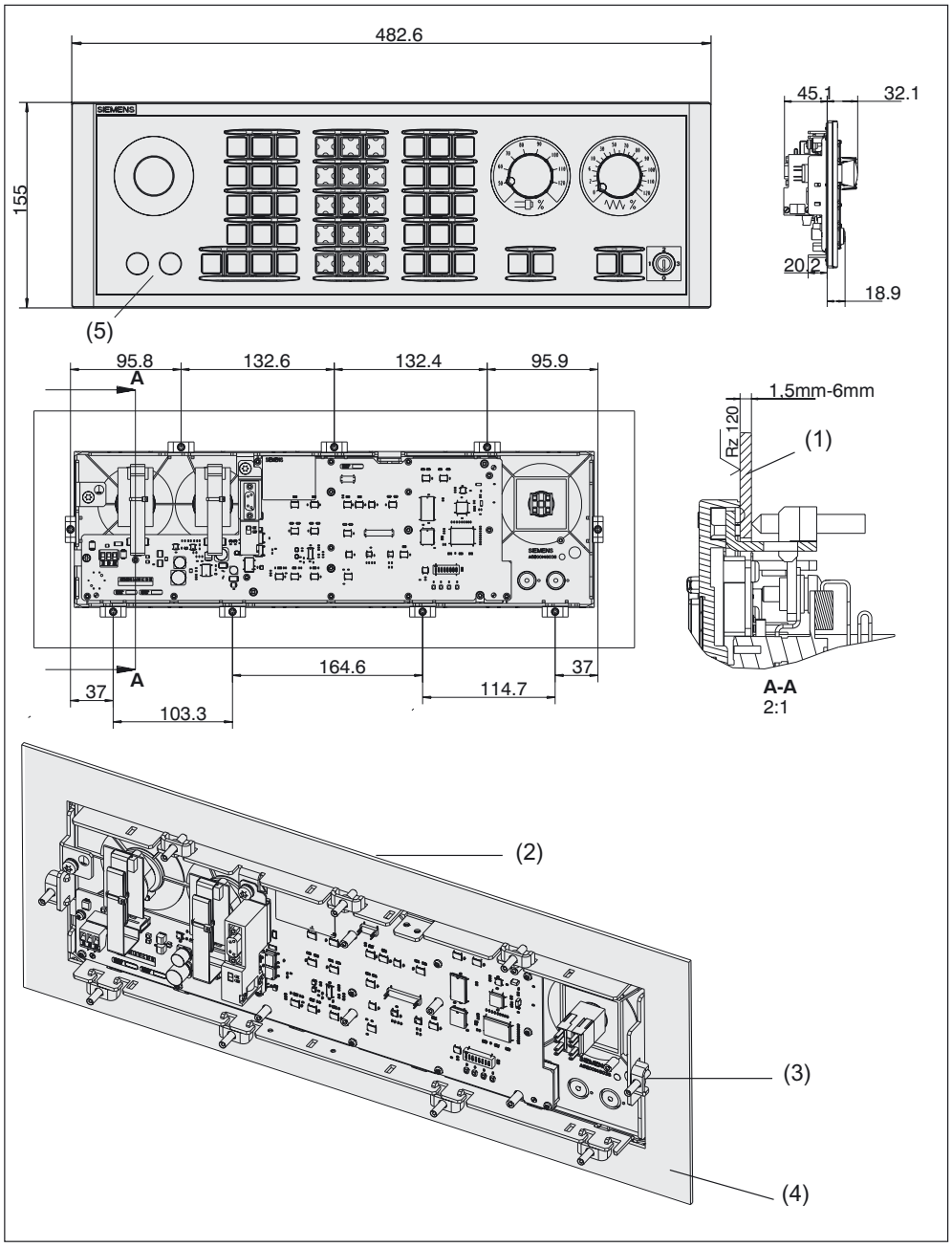

Figure 27-4 Dimension drawing for machine control panel MCP 483C

(1) Mounting frame
(2) Surface quality to DIN ISO 2768-L
(3) Tension jacks (x 9)
(4) Mounting frame

Tension jacks

The machine control panel is attached by means of 9 tension jacks (tightening torque 0.8 Nm; see dimension drawing).

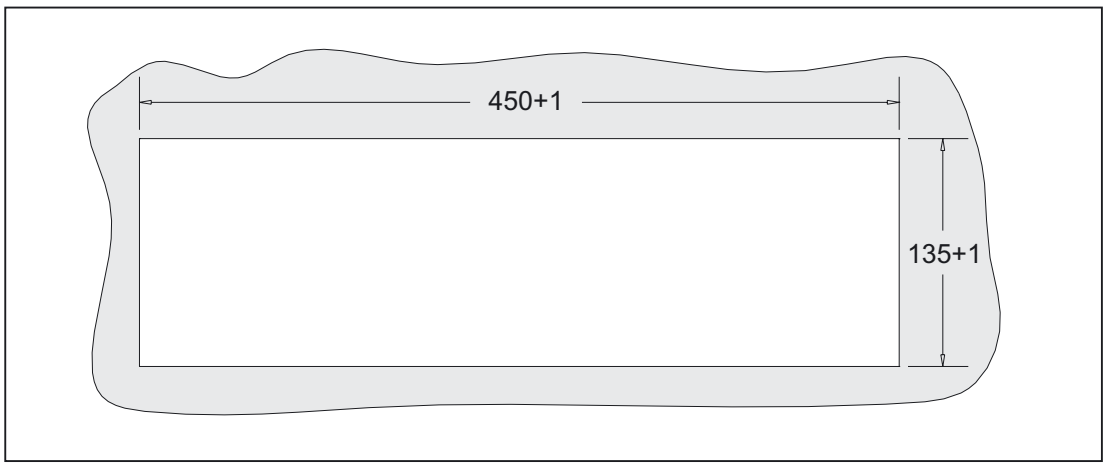

Figure 27-5 Panel cutout for machine control panel MCP 483C

Mounting position

Max. 60 ° to the vertical. For mounting positions greater than 60 °, a fan must also #be installed to keep the ambient temperature of the machine control panel constantly below 55 °C.

27.5 Settings

S3 DIP switch

With the DIP switch S3 (see diagram in Section: "Control and display elements" --> "Rear side"), the following settings are possible:

Table 27-3 S3 jumpering on machine control panel

8	7	6	5	4	3	2	1	Meaning / value	
							on off	Baud rate	 1.5 Mbaud 187.5 kBaud
					off on off	on off off		Transmission cycle time 200 ms 100 ms 50 ms	Receipt monitoring 2400 ms 1200 ms 600 ms
	on off	on	on	on				Bus address 15 14	
	On Off	Off						13 12	
	On Off	on	off					11 10	
	On Off	Off						9 8	
	On Off	on	on	off				7 6	
	On Off	Off						5 4	
	On Off	on	off					3 2	
	On Off	Off						1 0	
On Off								Interface MPI customer operator panel Series HW	

The following default setting (840D) is suggested:

Table 27-4 Default settings S3

8	7	6	5	4	3	2	1	Meaning
Off	Off	on	on	Off	on	Off	on	Baud rate: 1.5 Mbaud / Transmission cycle time: 100 ms Bus address: 6 / serial hardware

Settings for transmission cycle time

The PLC expects a message frame from the machine control panel at least every 500 ms. The machine control panel sends a message frame to the PLC at cyclic intervals when no key is pressed. This cycle time is set with S3 DIP switches 2 and 3. This enables the load on the PLC resulting from the machine control panel to be adjusted.

Settings for receipt cycle time

The machine control panel receives message frames at cyclic intervals from the PLC and answers these at cyclic intervals. The receipt monitoring time is linked to the transmission cycle time of the machine control panel and is set with the S3 DIP switch (2 and 3).

Bus address

The bus address for 840D must be set to "6". Other addresses can be selected, but these must then also be set at FB1 in the basic PLC program.

Interface parameters for communication via global data

Before the machine control panel can exchange data with the PLC CPU via the MPI interface, the appropriate interface parameters for the configuration must be activated. They are activated by means of the MPI bus address settings using DIP switch S3 in accordance with the following table.

Table 27-5 Correlation between MPI bus address and GD parameters with machine control panel

MPI address	Preset GD parameters Receive - Transmit
0, ..., 3	Reserved
4	5.1.1 - 5.2.1
5	5.1.1 - 5.2.1
6	Reserved
7	4.1.1 - 4.2.1
8	4.1.1 - 4.2.1
9	3.1.1 - 3.2.1
10	3.1.1 - 3.2.1
11	2.1.1 - 2.2.1
12	2.1.1 - 2.2.1
13	1.1.1 - 1.2.1
14	1.1.1 - 1.2.1
15	1.1.1 - 1.2.1

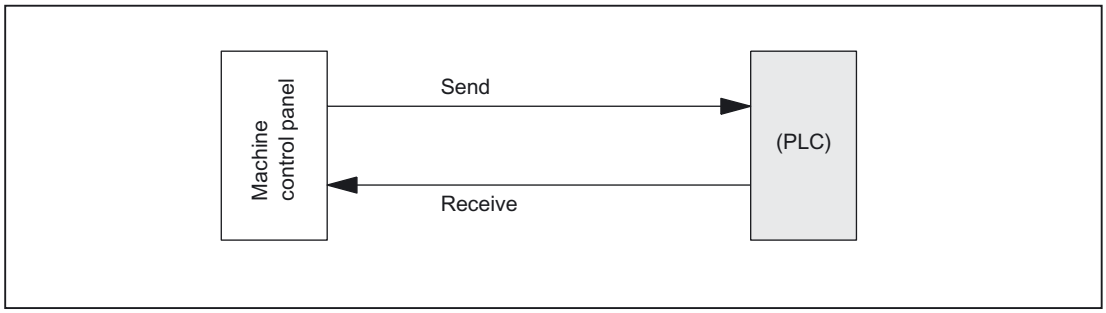

Figure 27-6 Receiving and transmitting from view of machine control panel

27.6 Connectors

Connecting the 24V supply

The 24V power supply is connected via a 3-pole terminal block (see figure section: "Control and display elements" → "Rear side") to the connector X10 on the rear side of the machine control panel.
The equipotential bonding conductor is fixed with an M5 screw.

Connection of the MPI connector (X20)

The machine control panel is connected to the OPI on the NCU (X101) using an MPI bus cable via the PCU interface (MPI/DP). The MPI connector is plugged into the X20 on the rear side of the machine control panel (see Fig. section: "Control and display elements" --> "Rear side") and secured using two locking screws.

27.7 Technical specifications

Security			
Safety class	III; PELV acc. to EN 50178		
Degree of protection per EN 60529	Front: IP54	Keyswitch: IP54	Rear side: IP00
Approvals	CE		
Electrical specifications			
Input voltage	DC 24 V		
Power consumption, max.	5 W		
Mechanical data			
Dimensions	Width: 483 mm Height: 155 mm	Depth: 77 mm Mounting depth: 45 mm	
Weight	approx. 1.6 kg		
Mechanical ambient conditions	**Operation**	**Transport** (in transport packaging)	
Vibratory load	10 -58 Hz: 0.015 mm 58 -200 Hz: 19.6 m/s^2 3M4 per EN 60721-3-3	5 -9 Hz: 3.5 mm 9 -200 Hz: 9.81 m/s^2 2M2 per EN 60721-3-2	
Shock stressing	150 m/s^2, 11 ms, 18 shocks 3M2 per EN 60721-3-3	150 m/s^2, 11 ms, 18 shocks 2M2 per EN 60721-3-2	
Climatic ambient conditions			
Cooling	By natural convection		
Condensation, spraying water and icing	Not permitted		
Supply air	Without caustic gases, dusts and oils		
	Operation	**Storage/shipping** (in transport packaging)	
Applicable standards	EN 60721-3-3	EN 60721-3-1 / -3-2	
Climate class	3K5	1K3 / 2K4	
Temperature limits	0 ... 45 ºC (at front) 0 ... 55 ºC (at rear)	-25 ... 55 ºC	
Temperature change	Max. 10 K/h	Max. 18 K/h	
Limits for relative humidity	5 ... 80%	5 ... 95%	
Permissible change in the relative air humidity	max. 0.1% /min		

27.8 Replacement parts

27.8.1 Overview

Table 27-6 Spare part kits for machine control panel MCP 483C

Name	Description	Quantity	Order No.:
	Variant A		
EMERGENCY STOP button	Actuating element 16 mm emergency stop mushroom-head pushbutton (red)	1	3SB2000–1AC01
	Switching element with one contact, 1NO contact	1	6FC5247–0AF13–0AA0
	Switching element with one contact, 1 NC contact	2	6FC5247–0AF13–0AA0
	Holder for 2 switching elements	1	6FC5247–0AF13–0AA0
	Variant B		
EMERGENCY STOP key	22 mm actuating element, emergency stop mushroom pushbutton, red, mushroom-shaped button and bracket	1	3SB3000-1HA20
	Switching element	1	3SB3400-0A
Key switch	Keyswitch with key	1	6FC5247–0AF02–0AA0
Set of keys	Set of keys MSTT	10	6FC5148–0AA03–0AA0
Rotary switch for spindle	SINUMERIK 810D/840D, override spindle / rapid traverse, rotary switch 1x16G, T=24, cap, knob, pointer, dials for spindle and rapid traverse	6	6FC5247–0AF12–0AA0
Rotary switch for feed	SINUMERIK 810D/840D, override feed / rapid traverse, rotary switch 1x 23G, T=32, cap, knob, pointer, dials for feed and rapid traverse	6	6FC5247–0AF13–0AA0
Set of tension jacks	SINUMERIK 810D/840D, tension jack set for supplementary components with 2.5 mm profile, length 20 mm	9	6FC5248–0AF14–0AA0

27.8.2 Replacement

Replacement of the handwheel, rotary switch and mouse is described in section: "15" TFT Operator Panel, 416 mm wide, without videolink receiver".

27.9 Accessories

Component	Description	Quantity	Order No.:
Key cover (for labeling)	1 set of 90, ergo-gray and 20 each of red / green / yellow / medium gray	1	6FC5248–0AF12–0AA0
Key cover (for labeling)	1 set of 90, clear	1	6FC5248–0AF21–0AA0
Key covers for turning	supplied separately packaged with MCP		

Machine control panel: MCP 483

28

28.1 Description

The machine control panel MCP 483 permits user-friendly and clear operation of the machine functions. It is suitable for machine-level operation of milling and turning machines, and particularly grinding machines.

Forty-six keys and both control device slots are equipped with user-inscribed slide-in strips for adapting to specific machines. A DIN A4 film for labeling the slide-in strips is included in the delivery kit.

The machine control panel is secured from the rear using special clamps supplied with the panel.

Validity

The description applies to the machine control panel:

Type	Key type	Order No.:
MCP 483	Film	6FC5203–0AF22–1AA2

Features

Control elements:

- Operating mode and function keys:
  - 50 keys with LEDs when connected via PROFIBUS DP
  - 48 keys with LEDs when connected via MPI
  - Direction keys for milling machines with rapid traverse override
  - Default key assignment includes 17 freely assignable customer keys
- Spindle control with override spindle (rotary switch with 16 positions)
- Feed control with override feed/rapid traverse (rotary switch with 23 positions)
- Keyswitch (4 positions and 3 different keys)
- 2 emergency stop pushbuttons (1 NO + 1 NC)

Interfaces:

PROFIBUS-DP/MPI interface

- for 6 control devices (6 inputs/6 outputs) for connection over PROFIBUS DP (additional cable set required for control devices, see section: "Accessories".)
- for 16 direct keys of OP 012/OP 015A/TP 015A when connected via PROFIBUS DP (Option: direct keys required).
- For 2 handwheels when connected via PROFIBUS DP (max. cable length: 5 m) (handwheel connection option required. The handwheel connection function depends on the NCU software.)

Expansion slots:

- 2 slots for control devices (d = 16 mm)

Key type:

- Membrane keys

28.2 Operator controls and indicators

28.2.1 Front

Overview

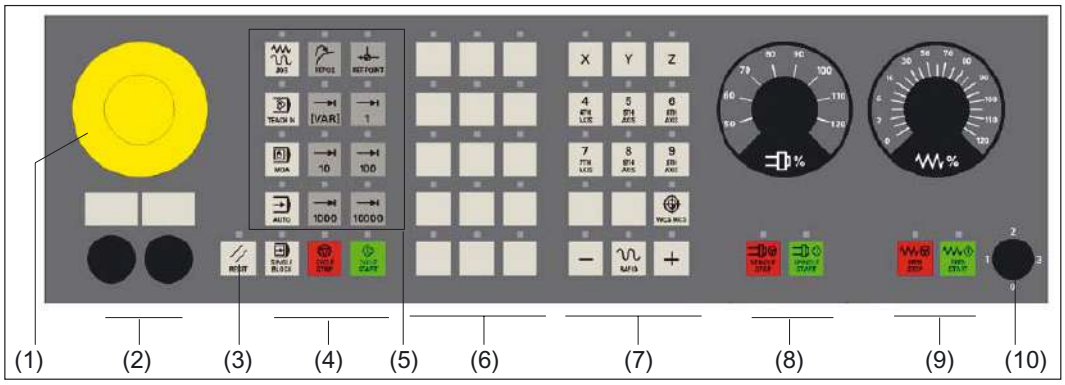

Figure 28-1 Position of control elements on machine control panel MCP 483 (milling version)

(1) EMERGENCY STOP key
(2) Installation locations for control devices (d = 16 mm)
(3) Reset button
(4) Program control
(5) Operating modes, machine functions
(6) User keys T1 to T15
(7) Direction keys with rapid traverse override (R1 to R15)
(8) Spindle control with override switch
(9) Feed control with override switch
(10) Keyswitch (four positions)

EMERGENCY STOP key

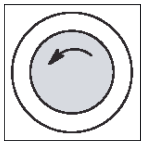

Emergency stop button
Press the red button in emergencies when

- people are at risk,
- there is the danger of machines or the workpiece being damaged.

As a rule, when operating the EMERGENCY STOP button, all drives are brought to a standstill with max. braking torque.

Turn the EMERGENCY STOP button counterclockwise to unlatch it.



Machine manufacturer
For other reactions to the EMERGENCY STOP:
refer to the machine tool manufacturer's instructions

Circuit for EMERGENCY STOP button

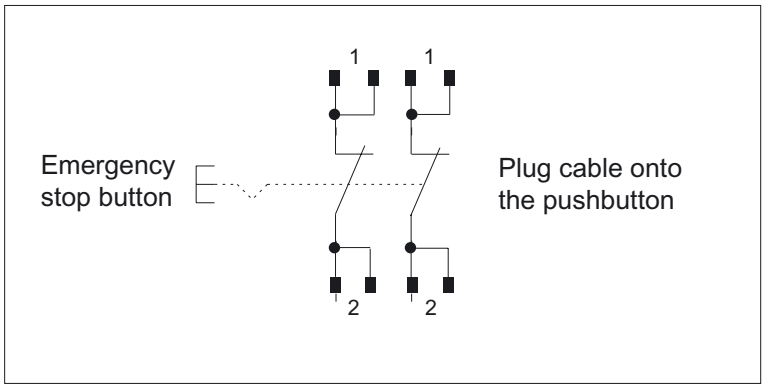

Figure 28-2 EMERGENCY STOP key circuit

Mounting slots for control devices

⚠ WARNING

The openings for mounting control devices **(2)** in Fig.: "Position of control elements of machine control panel MCP 483" must not be chipped out (risk of damage), but drilled to the required width.

28.2.2 Rear side

COM board

The control and display elements on the rear of the MCP 483 are located on the COM board (shown with a gray background in the illustration):

The detailed cutout under or above the interface name shows the position of pin 1 on the connectors.

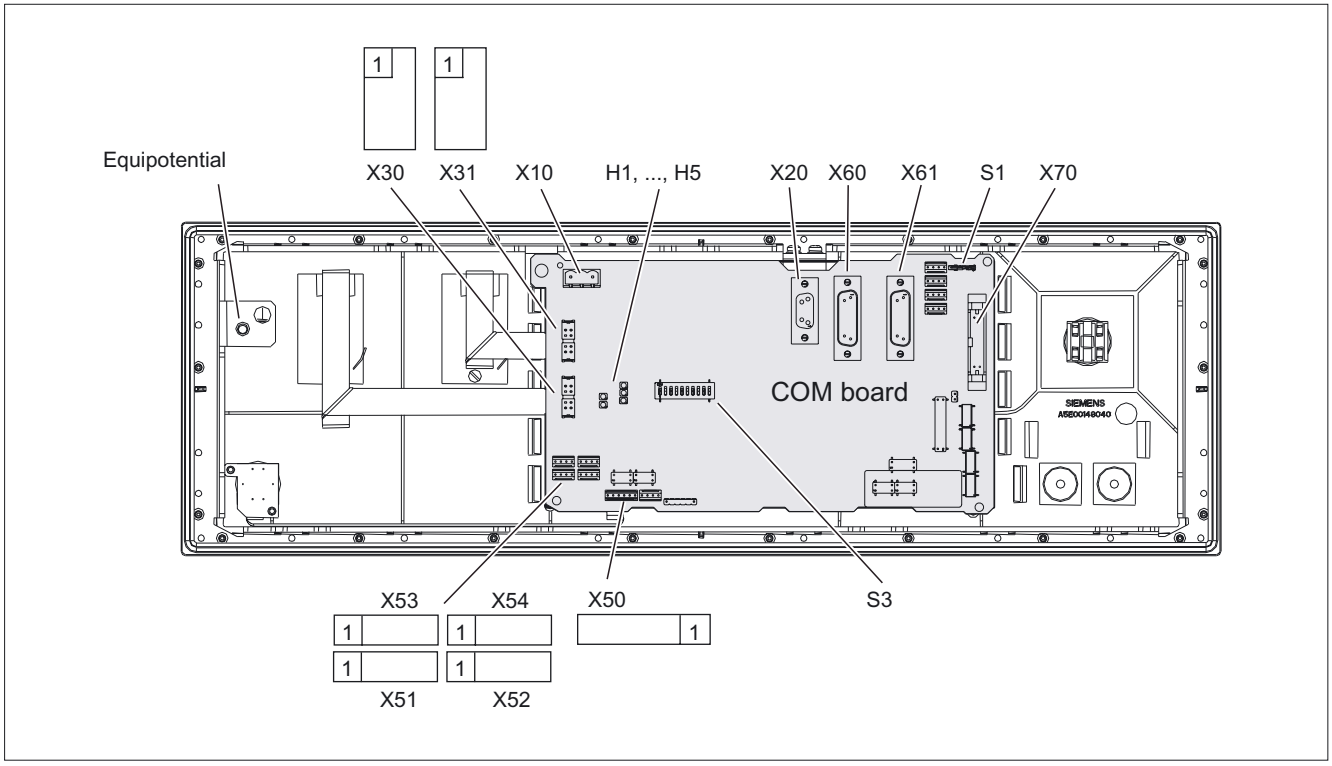

Figure 28-3 Rear of the MCP 483 showing the control and display elements and the interfaces

Jumper S1

Setting the handwheel signal type

- S1 open: TTL

– S1 closed: differential interface

S3 DIP switch

Sets e.g. baud rate, addresses and protocol (see section: "Settings via DIP switch S3")

Diagnostic LEDs 1 ... 5

No.	Monitoring of	Effect: LED ...	Diagnostics
H1	Hardware	lights up red	Initialization error
H2	(reserved)	–	–
H3	Voltage	lights up green	Logic voltages on board OK
H4	(reserved)	-	-
H5	PROFIBUS	flashes green	Ready for communication
		lights up green	Communication in progress
		lights up red	Channel interference or not yet ready (default after Power On)

28.3 Interfaces

MCP 483 communication is handled by the COM board where the interfaces are located (see section: "Control and display elements" --> "Rear side").

Overview

- **X10:** Power supply interface
  3-pin Phoenix terminal block
- **X20:**Operator panel interface (MPI/PROFIBUS)
  9-pin Sub-D socket connector
- **X30:** Interface for connecting rotary feed override switch (23 graduations)
  2 x 5-pin plug connector with lock
- **X31:** Interface for connecting rotary spindle override switch (16 graduations)
  2 x 5-pin plug connector with lock
- **X50:** Interface to 4-way keyswitch
  1 x 6-pin plug connector
- **X51-X54:** Interface for additional control devices (buttons incl. 24V lamps)
  each 1 x 4-pin plug connector
- **X60/X61:** Connection for 2 handwheels (TTL/DTTL)
  15-pin sub-D socket each
- **X70:** Connection of direct keys (16 digital inputs; opto-decoupled)
  2 x 10-pin plug connector
- **Equipotential**
  The equipotential bonding conductor is attached by means of an M5 screw.

Interfaces for additional control devices

Connector designation:	**X51, ..., X54**
Type:	4-pin plug connector

X51 / X52

Only switches (passive inputs) may be connected to the inputs X51 / X52.

Table 28-1 Pin assignment for connectors X51/X52

Pin	Name	Meaning	Type
1	KT-IN 1/4 *)	Customer key 1/4	I
2	KT-IN 2/5 *)	Customer key 2/5	
3	KT-IN 3/6 *)	Customer key 3/6	
4	M (GND)	Ground	V
*) KT-IN 1/2/3: X51; KT-IN 4/5/6: X52			

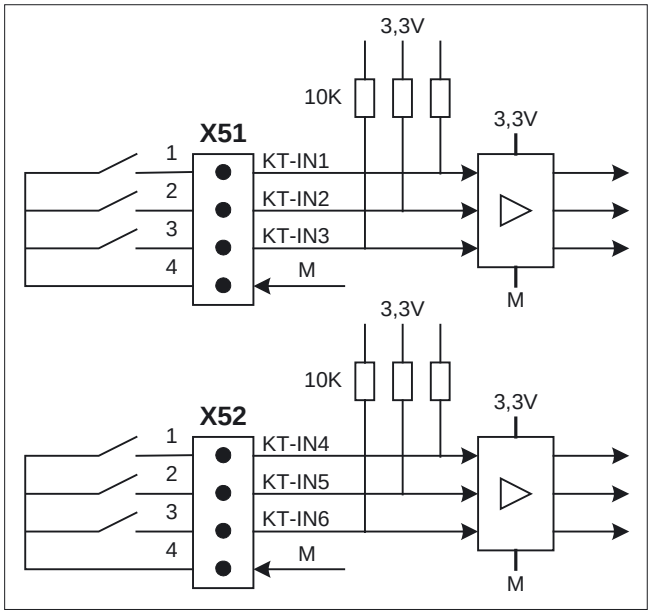

Figure 28-4 Circuit for inputs X51 / X52

Outputs X53 / X54

The outputs X53 / X54 are intended to activate lamps in the buttons.
We would recommend using 1.2 W lamps with max. 0.3 A per output.
High-side switches which limit the current during short circuits are used as output drivers.

CAUTION
Do not connect any relays, valves or other inductive loads.

Table 28-2 Pin assignment for connectors X53/X54

Pin	Name	Meaning	Type
1	KT-OUT 1/4 *)	Customer key 1/4 lamp	O
2	KT–OUT 2/5 *)	Customer key 2/5 lamp	
3	KT–OUT 3/6 *)	Customer key 3/6 lamp	
4	M24	Ground 24V	V
*) KT–OUT 1/2/3: X53; KT–OUT 4/5/6: X54			

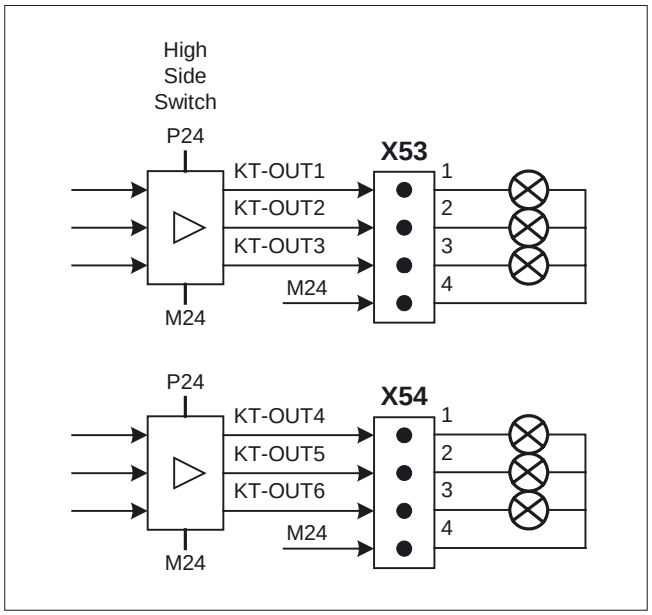

Figure 28-5 Circuit for outputs X53 / X54

Interfaces for 2 handwheels

Connector designation:	**X60, X61**
Type:	15-pin Sub-D socket

Table 28-3 Pin assignment for connectors X60/X61 *)

Pin	Name	Meaning	Type
1	PV5	Supply voltage 5V	V
2	M (GND)	Ground	
3	HWi_A *)	Handwheel pulses track A	I
4	Hwi_XA	Handwheel pulses track A (negated)	
5	N.C.	Unassigned	-
6	HWi_B	Handwheel pulses track B	I
7	HWi_XB	Handwheel pulses track B (negated)	
8	N.C.	Unassigned	-
9	PV5	Supply voltage 5V	V
10	N.C.	Unassigned	-
11	M (GND)	Ground	V
12 - 15	N.C.	Unassigned	-

*) I = 1: X60; i = 2: X61

Interface for direct control keys

Connector designation: **X70**
Type: 2 x 10-pin male connector, 2.54 mm grid

Table 28-4 Pin assignment for connector X70

Pin	Name	Meaning	Type
i = 1, ..., 16	DT_i	Direct control key i	I
17, 18	P5V_TACO	P5 keyboard controller	V
19, 20	M_TACO	M keyboard controller	

Power supply interface

Connector designation: **X10**
Type: 3-pin Phoenix terminal block, straight

Table 28-5 X10 pin assignments

	Pin	Name	Meaning	Type
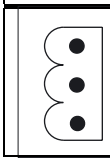	1	P24	24V potential	V power supply
	2	M24	Ground 24V	
	3	SHIELD	Shield connection	

28.4 Mounting

Dimension drawing for machine control panel MCP 483

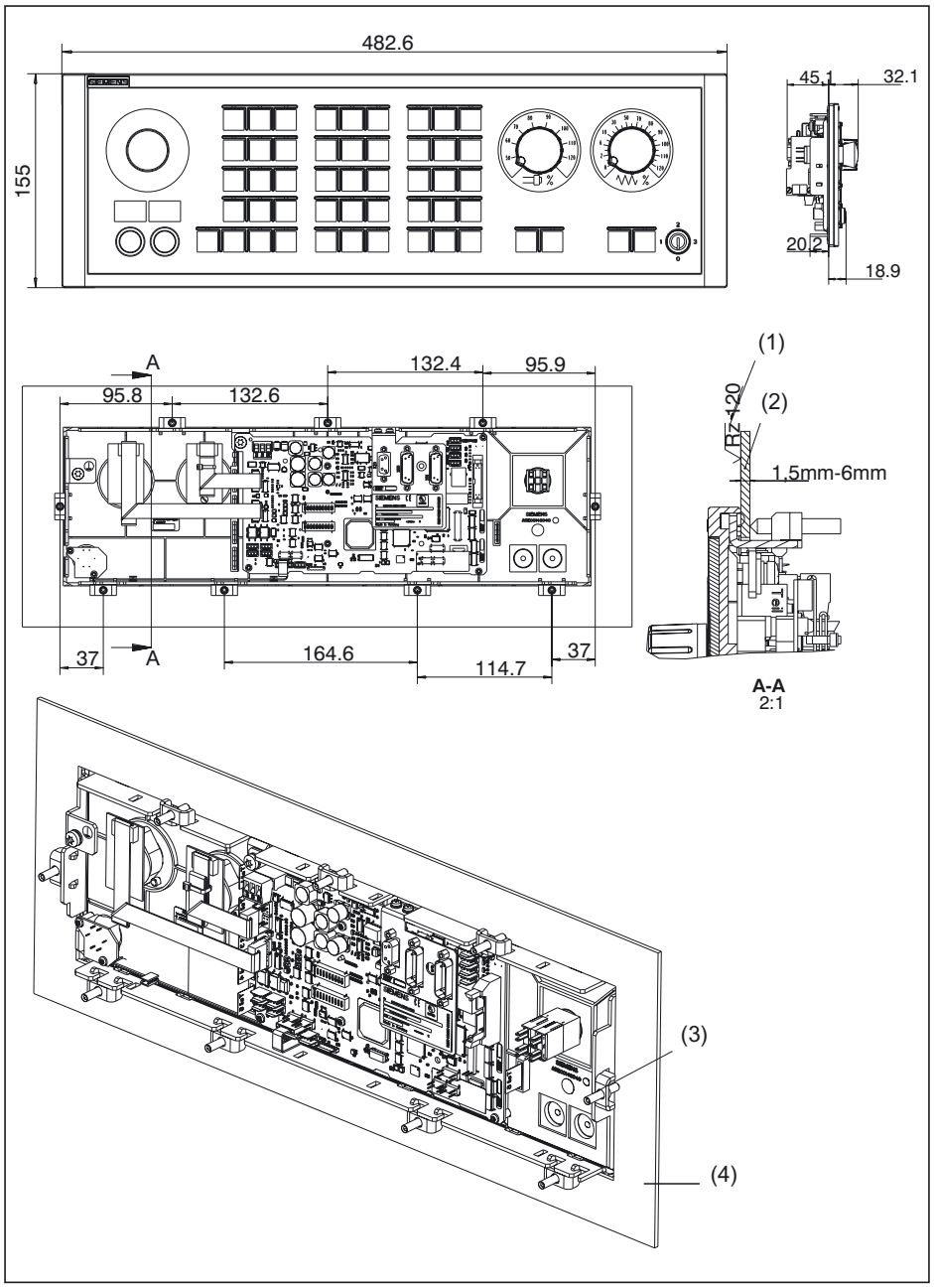

(1) In the sealing area
(2) Mounting frame
(3) Tension jack (9 parts) tightening torque 0.8 Nm
(4) Mounting frame

Tension jacks

The machine control panel is attached by means of 9 tension jacks (tightening torque 0.8 Nm; see dimension drawing).

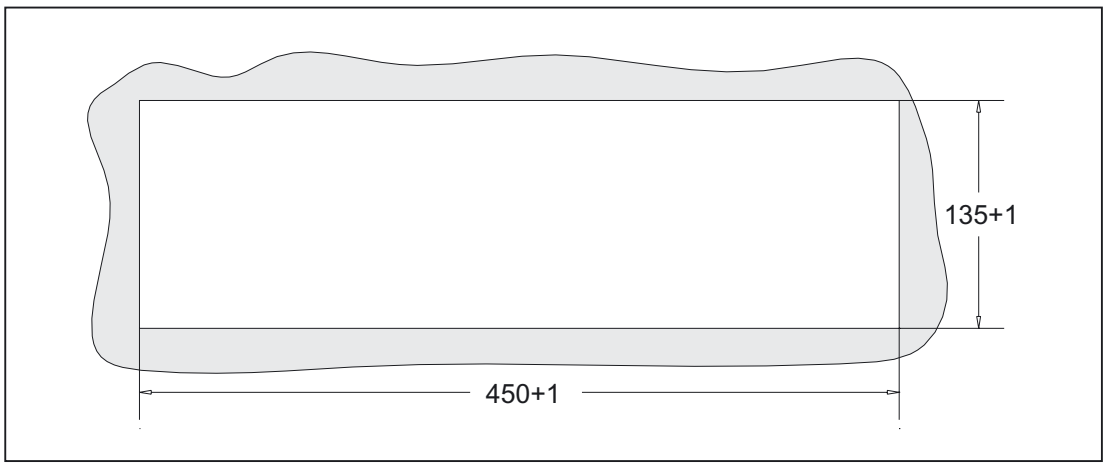

Figure 28-6 Panel cutout for machine control panel MCP 483

Mounting position

Max. 60° to the vertical. For mounting positions greater than 60°, a fan must also be installed to keep the ambient temperature of the machine control panel constantly below 55 °C.

28.5 Settings via DIP switch S3

Choosing the connection type

The connection type is set via switches 9 and 10:

Table 28-6 Connection type

1	2	3	4	5	6	7	8	**9**	**10**	**Meaning / value**
–	–	–	–	–	–	–	–	**on**	**on**	PROFIBUS DP
–	–	–	–	–	–	–	–	Off	Off	MPI

Connection type: MPI

For connection type MPI, the MPIs are set using switches 1 to 7:

Table 28-7 MPI parameters

1	**2**	**3**	**4**	**5**	**6**	**7**	8	9	10	**Meaning / value**	
										Data transfer rate	
on	–	–	–	–	–	–	–	–		1.5 Mbaud	
Off	–	–	–	–	–	–	–	–		187.5 kbaud	
										Transmission cycle time	Reception monitoring
–	**on**	Off	–	–	–	–	–	–	–	200 ms	2400 ms
–	Off	**on**	–	–	–	–	–	–	–	100 ms	1200 ms
–	Off	Off	–	–	–	–	–	–	–	50 ms	600 ms
										MPI	
–	–	–	Off	Off	Off	Off	–	–	–	0	
–	–	–	Off	Off	Off	**on**	–	–	–	1	
–	–	–	Off	Off	**on**	Off	–	–	–	2	
–	–	–	Off	Off	**on**	**on**	–	–	–	3	
–	–	–	Off	**on**	Off	Off	–	–	–	4	
–	–	–	Off	**on**	Off	**on**	–	–	–	5	
–	–	–	Off	**on**	**on**	Off	–	–	–	6	
–	–	–	Off	**on**	**on**	**on**	–	–	–	7	
–	–	–	**on**	Off	Off	Off	–	–	–	8	
–	–	–	**on**	Off	Off	**on**	–	–	–	9	
–	–	–	**on**	Off	**on**	Off	–	–	–	10	
–	–	–	**on**	Off	**on**	**on**	–	–	–	11	
–	–	–	**on**	**on**	Off	Off	–	–	–	12	
–	–	–	**on**	**on**	Off	**on**	–	–	–	13	
–	–	–	**on**	**on**	**on**	Off	–	–	–	14	
–	–	–	**on**	**on**	**on**	**on**	–	–	–	15	

Connection type: PROFIBUS-DP

For connection type PROFIBUS DP, the PROFIBUS is set using switches 1 to 7:

Table 28-8 PROFIBUS address

1	2	3	4	5	6	7	8	9	10	Meaning / value
										PROFIBUS
Off	Off	Off	Off	Off	Off	Off	–	–	–	0
on	Off	Off	Off	Off	Off	Off	–	–	–	1
Off	**on**	Off	Off	Off	Off	Off	–	–	–	2
on	**on**	Off	Off	Off	Off	Off	–	–	–	3
:	:	:	:	:	:	:	–	–	–	: (etc.)
on	Off	**on**	**on**	**on**	**on**	**on**	–	–	–	125
Off	**on**	**on**	**on**	**on**	**on**	**on**	–	–	–	126

Hardware code

The code for the series is set with switch 8:

Table 28-9 Hardware code

1	2	3	4	5	6	7	**8**	9	10	Meaning / value
–	–	–	–	–	–	–	Off	–	–	Series

Standard setting

The default setting for DIP switch S3 is:

- Data transfer rate: 1.5 Mbaud
- Transmission cycle time: 100 ms; reception monitoring 1200 ms
- Bus address: 6
- Connection type: MPI

Table 28-10 Standard setting

1	2	3	4	5	6	7	8	9	10	Meaning / value
on	Off	**on**	Off	**on**	**on**	Off	Off	Off	Off	Series

Note

Via switches 9 and 10 of the DIP switch S3 (see Section: "Operating and Display Elements" → "Rear Side") the connection type, i.e. the transfer protocol and the interface used are set:

MPI
If MPI is selected, the MPI parameters are set using switches 1 to 7.

PROFIBUS DP
If PROFIBUS DP is selected, the PROFIBUS address is set using switches 1 to 7.

The same code should be used for the standard hardware (switch 8 = off).

28.6 Connection via PROFIBUS DP

28.6.1 Overview

This section describes:

- Requirements for adding a DP slave MCP to the hardware configuration for a SIMATIC S7 project.
- Configuring a DP slave MCP with STEP7 "HW config."
- Details of how to link the DP slave MCP to the basic PLC program and user program (optional)

Note

The instructions given in this chapter are essentially limited to the special requirements for configuring the DP slave MCP. For more details about working with SIMATIC STEP 7 please refer to the relevant SIMATIC documentation or online help.

Note

Both units can be linked up using the supplied 20-pin ribbon cable in order to transfer the direct control key signals of the operator panel front to the COM board of the machine control panel. The direct control key module therefore no longer needs to be connected.

28.6.2 Prerequisites

The following components are needed as prerequisites for adding a DP slave MCP to the hardware configuration:

- SIMATIC STEP 7
- GSD file of DP slave MCP
- Graphics files of DP slave MCP

SIMATIC STEP 7

SIMATIC STEP 7 is required in the following version or later:

- SIMATIC STEP 7 version 5.2 or later, Service Pack 1

GSD file

The GSD file of the DP slave MCP is required in the following version or later:

- SI008109.GSD version 1.0 or later

A GSD file contains all the properties of a DP slave in ASCII format. For each DP slave SIMATIC STEP 7 requires a module-specific GSD file so that the DP slave can be found in the hardware catalog.

The DP slave MCP is shown in SIMATIC STEP 7 in the hardware catalog of “HW Config” under the following path:

- Profile: **Standard**
  PROFIBUS–DP > Other field devices > NC/RC > Motion Control > SINUMERIK MCP

If the module is not displayed, the GSD file must be installed. To do this, in "HW config" use menu command **Tools > Install new GSD file**. Before installing the GSD file, please read the following instructions concerning the graphics files.

Graphics files

The graphics files belonging to the GSD file:

- SI8109_N.BMP
- SI8109_S.BMP

are used to display the DP slave MCP in the "HW config" station window. They are automatically installed by STEP 7 when the GSD file is installed. They must be located in the same directory as the GSD file.

28.6.3 Functions of the machine control panel

The machine control panel offers the following functions:

- Standard
- Handwheel
- Additional I/Os

Standard

The function transfers input/output data from the function keys and user-specific keys and outputs:

- Input data: 8 bytes
- Output data: 8 bytes

The input/output data is compatible with the input/output data from the previous machine control panel:

The input/output data for machine control panel MCP 483 is compatible with the input/output data from the previous machine control panel:

- Machine control panel (MCP), MPI
- 19'' machine control panel

Handwheel

The function transfers the absolute values for the two handwheels that can be connected to the machine control panel:

Absolute value	1. Handwheel	Absolute value	2. Handwheel
Low byte			High byte

For each handwheel the current handwheel value is transferred as a 16-bit absolute value relative to the starting value. The starting value for the sensor counter in the handwheel is 0.

The absolute values are transferred in big endian format.

The data for both handwheels is always transferred. The absolute value for a handwheel that is not connected is always 0.

Additional I/Os

The function transfers the data for all non-standard inputs/outputs:

- Direct control keys
- Customer keys: 6 signals (bit 0 to bit 6)
- Rotary switch

with the following distribution:

- Input data: 5 bytes

Direct control keys	(OP 012)	User keys	1. Rotary switch	2. Rotary switch
Low byte				High byte

- Output data: 2 bytes

Reserved always 0	Customer LEDs
Low byte	High byte

28.6.4 Configuring the DP slave MCP

This section describes how to configure a DP slave MCP with reference to the hardware configuration for a SIMATIC S7 project shown in the figure by way of example.

The hardware configuration has the following modules:

- SIMATIC station 300 with SINUMERIK 810D/840D and PLC 317-2DP
- SINUMERIK MCP with module: standard, handwheel, extended

Procedure

Configuring the DP slave MCP as an S7 project involves the following steps:

1. Add the DP slave MCP to the configuration **(1)**
2. Set the PROFIBUS address
3. Add the appropriate module to the DP slave MCP according to the functions required. **(2)**
4. Set the I/O addresses for the individual slots.

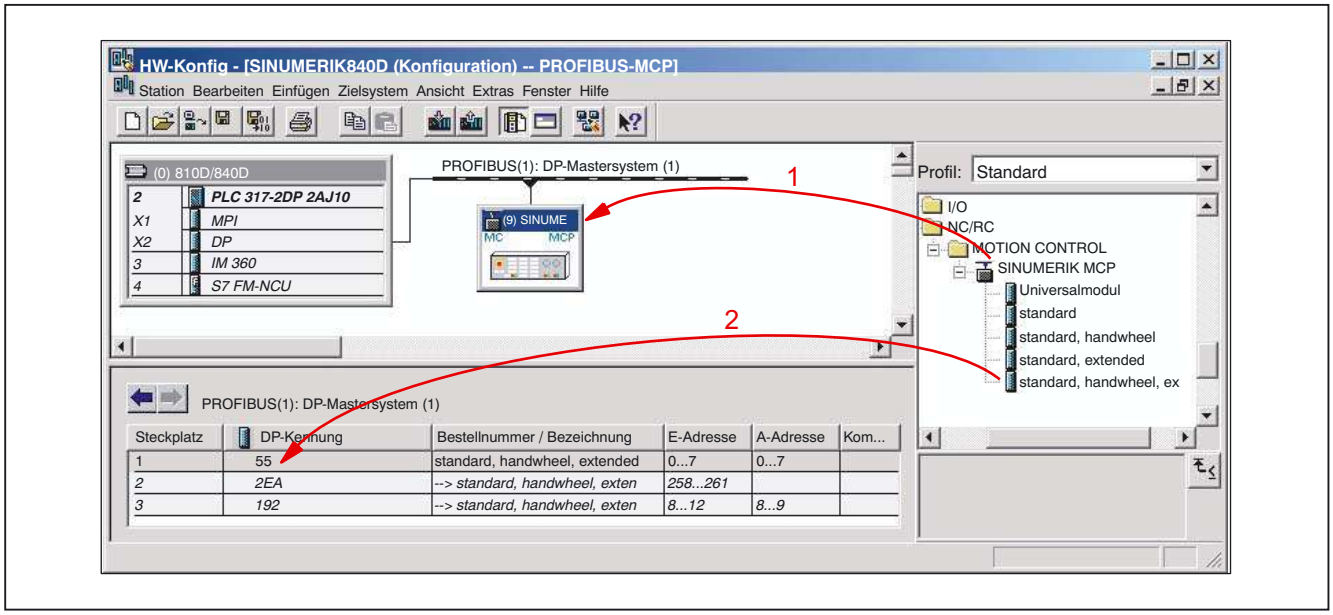

Figure 28-7 Configuration with DP slave MCP

Requirements: S7 project

The following status is required for the S7 project to which the DP slave MCP is to be added:

- You have created the S7 project
- You have set up a SIMATIC 300 station with PROFIBUS master-capable SINUMERIK controller

Adding a DP slave MCP

To add a DP slave MCP to the configuration, open the hardware catalog using the menu command View > Catalog.

The DP slave MCP can be found at:

- Profile: **Standard**
  PROFIBUS–DP > Other field devices > NC/RC > Motion Control > SINUMERIK MCP

Click with the left mouse button on the DP slave MCP (SINUMERIK MCP) in the hardware catalog and drag it onto the DP master system in the station window by holding down the left mouse button.

The DP master system is displayed in the station window with the following symbol:



When you release the left mouse button, the DP slave MCP is added to the configuration.

Note

As you drag the DP slave the cursor appears as a circle with a slash through it.
When the cursor is positioned exactly over the DP master system, it changes to a plus sign, and the DP slave can be added to the configuration.

PROFIBUS parameters

Once you have added the DP slave MCP to the configuration,
the "Properties - PROFIBUS interface SINUMERIK MCP" dialog box is displayed.

The following PROFIBUS parameters must either be set or verified:

- PROFIBUS address
- Data transfer rate
- Profile

Dialog

Dialog: Properties - PROFIBUS interface SINUMERIK MCP					
	Tab card: parameters				
		Address: **<PROFIBUS address>** Button: “Properties...”			
			Dialog: Properties – PROFIBUS		
				Tab card: Network settings	
					Data transfer rate: **12 Mbaud** Profile: **DP**
			OK		
OK					

Note

The PROFIBUS address of the DP slave MCP set in the S7 project must match the PROFIBUS address set on the module (DIP switch S3) (see Section: "Settings via DIP switch S3"

There is **no automatic adjustment!**

The following data must agree:

1. SIMATIC S7 configuration of DP slave MCP
PROFIBUS address

2. Machine control panel MCP 483
PROFIBUS address (DIP switch S3)

Adding a module

The active functions and hence the number of user data elements to be transferred are chosen by selecting the appropriate pre-configured module. The modules in the hardware catalog are positioned below the DP slave MCP. The following modules are available:

- *Universal module* (not applicable)
- standard
- standard, handwheel
- standard, extended
- standard, handwheel, extended

Module: standard

The module transfers the data for the "Standard" function:

- Input data: 8 bytes

Standard data (8 bytes)

- Output data: 8 bytes

Standard data (8 bytes)

Module: standard, handwheel

The module transfers the data for the "Standard" and "Handwheel" functions:

- Input data: 12 bytes

Standard data (8 bytes)	Absolute value 1st handwheel (2 bytes)	Absolute value 2nd handwheel (2 bytes)
Low byte		High byte

- Output data: 8 bytes

Standard data (8 bytes)

Module: standard, extended

The module transfers the data for the "Standard" and "Additional I/Os" functions:

- Input data: 13 bytes

Standard data (8 bytes)	Direct control keys (OP 012) (2 bytes)	Customer keys (1 byte)	1. Rotary switch (1 byte)	2. Rotary switch (1 byte)
Low byte				High byte

- Output data: 10 bytes

Standard data (8 bytes)	Reserved (1 byte)	Customer LEDs (1 byte)
Low byte		High byte

Module: standard, handwheel, extended

The module transfers the data for the "Standard", "Handwheel" and "Additional I/Os" functions:

- Input data: 17 bytes

Standard data (8 bytes)	Absolute value 1st handwheel (2 bytes)	Absolute value 2nd handwheel (2 bytes)	Direct control keys (OP 012) (2 bytes)
Low byte			

Customer keys (1 byte)	1. Rotary switch (1 byte)	2. Rotary switch (1 byte)
		High byte

- Output data: 10 bytes

Standard data (8 bytes)	Reserved (1 byte)	Customer LEDs (1 byte)
Low byte		High byte

I/O addresses

If you add a module to slot 1 of the DP slave MCP, the input/output addresses are automatically assigned by STEP 7.

Double clicking with the left mouse button on a slot opens the "Properties - DP slave" dialog box. The starting addresses for the I/O data for the slot can be set here.

28.6.5 Linking the DP slave MCP

This section describes how to link the DP slave MCP

- in the basic PLC program for transferring the standard input / output data in the VDI interface
- to the PLC user program (optional) to implement a user-specific response to a module failure

Note

"Handwheel" function
The "Handwheel" function is not currently supported by the basic PLC program.

"Additional I/Os" function
Processing of additional I/O data is the sole responsibility of the user (machine manufacturer) and is not supported by the basic PLC program.

PLC basic program

In order to transfer the standard I/O data for the DP slave MCP using the basic PLC program, the corresponding I/O address range must be added to the communication parameters for function block FB1.

Function block FB1

The communications parameters of the MCP are called MCPx... (x = 1 or 2) in function block FB1. A maximum of 2 machine control panels are supported by the basic PLC program.

To synchronize several MCPs, the PLC program must be adapted accordingly. This is the user's (machine manufacturer's) responsibility.

To operate a machine control panel MCP 483 as a DP slave, only the following parameters are relevant:

MCPNum:	INT	// see below: **Note**
MCP1In:	POINTER	// Address of input signals
MCP1Out:	POINTER	// Address of output signals

The MCP2... parameters are only needed if a 2nd MCP is used in addition to the 1st MCP:

MCP2In:	POINTER	// Address of input signals
MCP2Out:	POINTER	// Address of output signals

The parameters listed below serve to synchronize two MCPs:

MCP1Stop:	BOOL	// Transfer of relevant operator components:
MCP2Stop:	BOOL	// FALSE = start; TRUE = stop
MCP1NotSend:	BOOL	// Send and receive mode of the relevant
MCP2NotSend:	BOOL	// operator components:
		// FALSE = Send and receive is active
		// TRUE = only receive is active

Note

Parameter: MCPNum
Up to and including basic PLC program, Version 7.1, for the parameter:
MCPNum, 0 should always be specified.

Parameter: MCPxStop and MCPxNotSend
These parameters are irrelevant for connection via PROFIBUS DP.

References

A detailed description of the basic PLC program and/or FB 1 function block can be found in:

/FB1/	Function description of bases: Basic P3 PLC program
	Section: FB 1: RUN_UP Basic program, startup section

VDI interface parameter assignment

The following function blocks can be used to assign the VDI interface:

- FC 19: Machine control panel MCP 483, version M (milling)
- FC 25: Machine control panel MCP 483, version T (turning)

Note

Function blocks FC 19, FC 24 and FC 25 are part of the basic PLC program. It is the user's (machine manufacturer's) responsibility to call the block correctly and/or assign the interface the appropriate parameters.

References

A detailed description of the function blocks for transferring the machine control panel signals to the VDI interface can be found in:

/FB1/	Function description of bases: Basic P3 PLC program
	Section: FC 19: MCP_IFM ...
	Section: FC 24: MCP_IFM2 ...
	Section: FC 25: MCP_IFT ...

Example

The following example shows the communication parameter settings for function block FB 1 for a machine control panel:

MCPNum	:= 0	// Number of active MCP
MCP1In	:= P#E 0.0	// Address of input data (8 bytes)
MCP1Out	:= P#A 0.0	// Address of output data (8 bytes)
MCP1StatSend	:= P#A 0.0	// Presetting; no meaning
MCP1StatRec	:= P#A 0.0	// Presetting; no meaning
MCP1BusAdr	:= 0	// Presetting; no meaning
MCP1Timeout	:= S5T#700MS	// Presetting; no meaning
MCP1Cycl	:= S5T#200MS	// Presetting; no meaning
MCPMPI	:= FALSE	// MCP/HT 6 is operated on the “extended ” MPI bus
MCP1Stop	:= FALSE	// Presetting; no meaning
MCP1NotSend	:= FALSE	// Presetting; no meaning
MCPSDB210	:= FALSE	// Presetting; no meaning

PLC user program

If an MCP is connected via PROFIBUS DP, the basic PLC program does not check for module failure.

In this case the MCP is monitored by a standard mechanism to monitor the active DP slave:

- PLC operating system
- PROFIBUS controller

If a failure of a DP slave MCP is detected, the PLC defaults to STOP.

Customized response

The following organization blocks can be added to the PLC user program to customize the response to a DP slave MCP failure:

- OB 82: Diagnostics interrupt
- OB 86: Rack failure

Please refer to the corresponding SIMATIC literature for details of linking organization blocks and evaluating diagnostic data.

Note

In the event of the failure of a machine control panel connected via OPI/MPI, the following alarm is triggered by the basic PLC program:

• Alarm "40026x machine control panel (x+1) failure"; with x = 0, 1

If the machine control panel is being operated as a DP slave, the user (machine manufacturer) is responsible for triggering a corresponding alarm.

28.6.6 Input/output image of DP slave MCP

Arrangement: Keys and LEDs

A key and the LED positioned above it form a logical unit. The key and the LED have the same number.

- Key: Sxy = Key number xy
- LED: LEDxy = LED number xy

The Fig. shows the arrangement of keys and LEDs on the machine control panel together with their internal designation. For the sake of clarity, the LED designations are not shown in full.

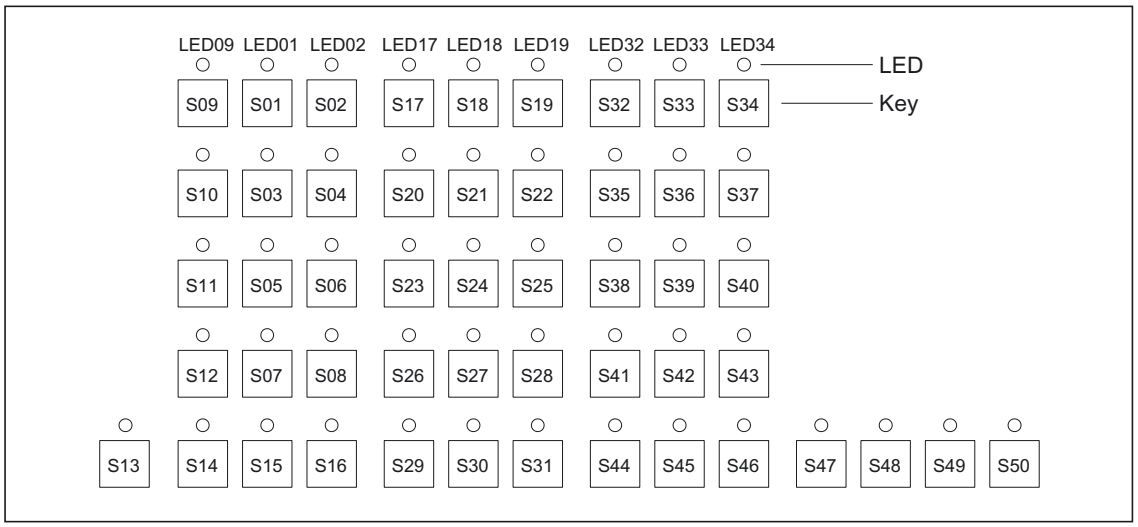

Figure 28-8 Designation of keys and LEDs

Input image

Table 28-11 Arrangement of key signals in the input image of the DP slave MCP

Signals from machine control panel (keys)								
Byte	**Bit7**	**Bit6**	**Bit5**	**Bit4**	**Bit3**	**Bit2**	**Bit1**	**Bit0**
EB n+0	*Spindle override*				Operating mode			
	D	C	B	O	JOG S09	TEACH S10	MDA S11	AUTO S12
EB n+1	Machine functions							
	REPOS S01	REF S02	var. INC S03	10000 INC S08	1000 INC S07	100 INC S06	10 INC S05	1 INC S04
EB n+2	*Keyswitch* *position 0*	*Keyswitch* *position 2*	Spindle Start S48	*Spindle Stop S47	Feed Start S47	*Feed Stop S49	NC Start S16	*NC Stop S15
EB n+3	RESET S13	*Keyswitch* *position 1*	Single Block S14	*Feed rate override*				
				I	D	C	B	O
EB n+4	Direction keys			*Keyswitch* *position 3*	Axis selection			
	R15 S46	R13 S44	R14 S45		R1 S32	R4 S35	R7 S38	R10 S41
EB n+5	Axis selection							
	R2 S33	R3 S34	R5 S36	R12 S43	R11 S42	R9 S40	R8 S39	R6 S37
EB n+6	Freely assignable customer keys							
	T9 S25	T10 S256	T11 S27	T12 S28	T13 S29	T14 S30	T15 S31	*not used*
EB n+7	Freely assignable customer keys							
	T1 S17	T2 S18	T3 S19	T4 S20	T5 S21	T6 S22	T7 S23	T8 S24
Signals marked with * are inverse signals								

Output image

Table 28-12 Arrangement of LED signals in the output image of the DP slave MCP

Signals to machine control panel (LEDs)								
Byte	**Bit7**	**Bit6**	**Bit5**	**Bit4**	**Bit3**	**Bit2**	**Bit1**	**Bit0**
AB n+0	Machine function				Operating mode			
	1000 INC LED07	100 INC LED06	10 INC LED05	1 INC LED04	JOG LED09	TEACH LED10	MDA LED11	AUTO LED12
AB n+1	Feed Start LED50	Feed Stop LED49	NC Start LED16	NC Stop LED15	Machine functions			
					REPOS LED01	REF LED02	var. INC LED03	10000 INC LED08
AB n+2	Axis selection					Single Block LED14	Spindle Start LED48	Spindle Stop LED47
	R13 LED44	R1 LED32	R4 LED35	R7 LED38	R10 LED41			
AB n+3	Axis selection							
	R3 LED34	R5 LED36	R12 LED43	R11 LED42	R9 LED40	R8 LED39	R6 LED37	R15 LED46
AB n+4	Freely assignable customer keys							Axis selection R2 LED33
	T9 LED25	T10 LED26	T11 LED27	T12 LED28	T13 LED29	T14 LED30	T15 LED31	
AB n+5	Freely assignable customer keys							
	T1 LED17	T2 LED18	T3 LED19	T4 LED20	T5 LED21	T6 LED22	T7 LED23	T8 LED24
AB n+6	*not used*	*not used*	*not used*	*not used*	*not used*	*not used*	RESET[1]) LED13	R14[1]) LED45
AB n+7	*not used*	*not used*	*not used*	*not used*	*not used*	*not used*	*not used*	*not used*
[1]) New signal for MCP 483								

28.7 Technical specifications

Security				
Safety class	III; PELV acc. to EN 50178			
Degree of protection per EN 60529	Front: IP65	Keyswitch: IP54	Rear side: IP00	
Approvals	CE			
Electrical specifications				
Input voltage	DC 24 V			
Power consumption, max.	Board 7 W	Lamps 7.2 W (6 x 1.2 W) *)	Handwheels 2 x 0.9 W	Total 16 W
Mechanical data				
Dimensions	Width: 483 mm Height: 155 mm		Depth: 70 mm Mounting depth: 38 mm	
Distance from NCU/PCU	MPI interface: 200 m PROFIBUS DP: 100 m			
Weight	Approx. 1.6 kg			
Mechanical ambient conditions	**Operation**		**Transport** (in transport packaging)	
Vibratory load	10 -58 Hz: 0.015 mm 58 -200 Hz: 19.6 m/s^2 3M4 per EN 60721-3-3		5 -9 Hz: 3.5 mm 9 -200 Hz: 9.81 m/s^2 2M2 per EN 60721-3-2	
Shock stressing	150 m/s^2, 11 ms, 18 shocks 3M2 per EN 60721-3-3		150 m/s^2, 11 ms, 18 shocks 2M2 per EN 60721-3-2	
Climatic ambient conditions				
Cooling	By natural convection			
Condensation, spraying water and icing	Not permitted			
Supply air	Without caustic gases, dusts and oils			
	Operation		**Storage/shipping** (in transport packaging)	
Applicable standards	EN 60721-3-3		EN 60721-3-1 / -3-2	
Climate class	3K5		1K3 / 2K4	
Temperature limits	0 ... 45 ºC (at front) 0 ... 55 ºC (at rear)		-20 ... 60ºC	
Temperature change	Max. 10 K/h		Max. 18 K/h	
Limits for relative humidity	5 ... 80% at 25°C		5 ... 95% at 25°C	
Permissible change in the relative air humidity	max. 0.1% /min			
*) If the outputs for the illuminated pushbuttons (X53/X54) are loaded with the max. permissible current of 0.3 A, this results in additional power consumption of 36 W. The total power consumption is then 52 W.				

28.8 Replacement parts

28.8.1 Overview

Table 28-13 Spare parts for machine control panel MCP 483

Name	Description	Quantity	Order No.:
	Variant A		
EMERGENCY STOP button	Actuating element 16 mm emergency stop mushroom-head pushbutton (red)	1	3SB2000–1AC01
	Switching element with one contact, 1NO contact	1	3SB2404–0B
	Switching element with one contact, 1 NC contact	2	3SB2404–0C
	Holder for 2 switching elements	1	3SB2908–0AA
	Variant B		
EMERGENCY STOP key	22 mm actuating element, 40 mm mushroom pushbutton, snap action with tamper protection, latching, red, with holder, unlit	1	3SB3000-1HA20
	Contact block with 2 contacts 1 NO + 1 NC, 2-pole screw terminal	1	3SB3400-0A
Key switch	Keyswitch with key	1	6FC5247–0AF02–0AA0
Sets of keys	Set of keys (10 sets) for machine control panel	1 set	6FC5148–0AA03–0AA0
Set of tension jacks	Tension jack set (9 items) for supplementary components with 2.5 mm profile, length 20 mm	1 set	6FC5248–0AF14–0AA0
	Obsolescent type (up to 12/2004)		
Override for rotary spindle switch	Spindle/rapid traverse override, rotary switch 1x16G, T=24, cap, button, pointer, spindle and rapid-traverse dials	1	6FC5247–0AF12–0AA0
Rotary feed override switch	Feed rate/rapid traverse, override rotary switch 1x23G, T=32, cap, button, pointer, feed and rapid-traverse dials	1	6FC5247–0AF13–0AA0
	Replacement type (as of 01/2005)		
Override for rotary spindle switch	Spindle/rapid traverse override, solid-state rotary switch 1x16G, T=24, cap, button, pointer, spindle and rapid-traverse dials	1	6FC5247–0AF12–1AA0

Name	Description	Quantity	Order No.:
Rotary feed override switch	Feed rate/rapid traverse, override solid-state rotary switch 1x23G, T=32, cap, button, pointer, feed and rapid-traverse dials	1	6FC5247–0AF13–1AA0

28.8.2 Replacement

Replacement of the rotary switch is described in chapter: "15" TFT Operator Panel, 416 mm wide, without videolink receiver".

28.9 Accessories

28.9.1 Overview

Accessories and options for machine control panel MCP 483

Component	Description	Quantity	Order No.:
Slide-in labels-	SINUMERIK 810D/840D slide-in labels (3 A4 films)	1 set	6FC5248–0AF22–1AA1
Cable set for additional control devices	SINUMERIK 810D/840D cable set (60 pieces) for additional control devices of machine control panels Length: 500 mm	1 set	6FC5247–0AA35–0AA0
Cable for handwheel connection *)	SINUMERIK 810D/840D, cable for handwheel connection, max. cable length: 5 m	1	6FX8002–2CP00–1xxx
Direct keys/handwheel connection	Direct keys/handwheel connection Option for 6FC5203–0AF22–1AA1/–0AF23–1AA0	1	6FC5252–0AF00–0AA0
*) see Figure			

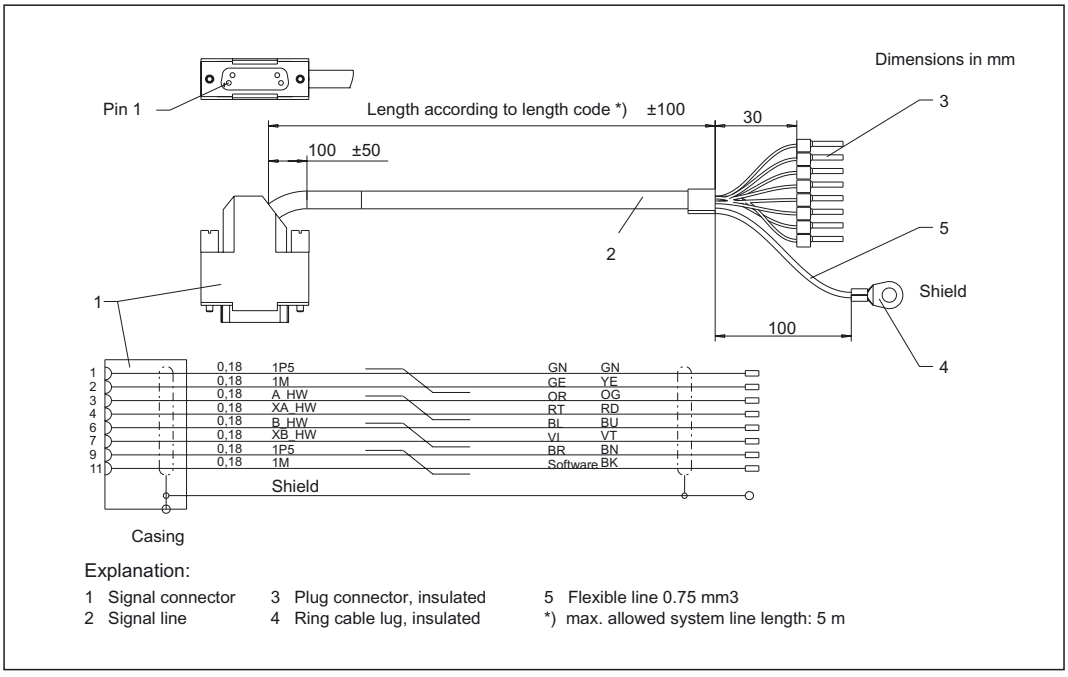

Figure 28-9 Connecting cable for handwheel

Order No. 6FX8002-2CP00-1xxx (xx is the length code: A = 0, B = 1, etc.)

28.9.2 Membrane keyboard: Labeling the slide-in labels

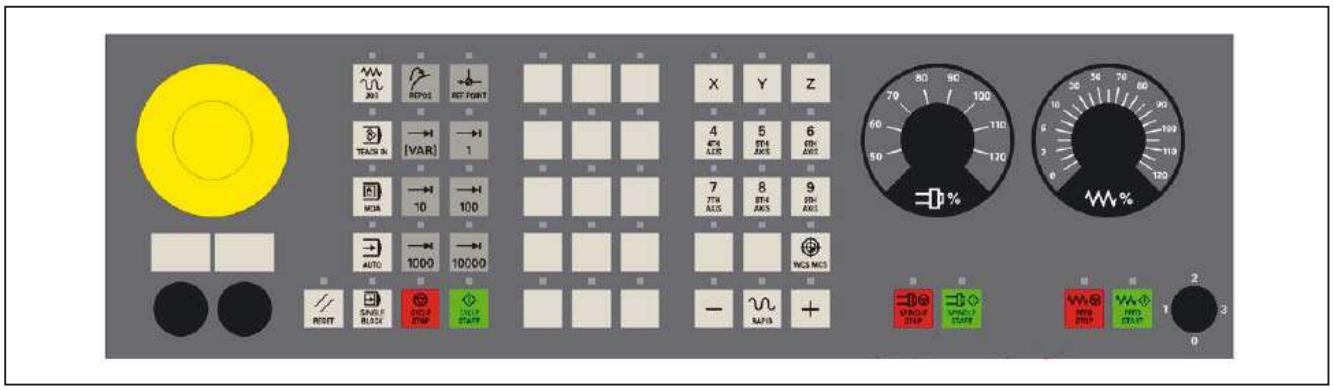

Figure 28-10 Machine control panel MCP 483

The machine control panel (MCP) shown above is the standard shipped variant.

You can create your own slide-in labels to label the keys differently. A printable blank film (A4) is supplied with the panel for this purpose.

A spare parts kit containing three blank films is also available:
MLFB: 6FC5248–0AF22–1AA1 (Item no. A5E00179123)

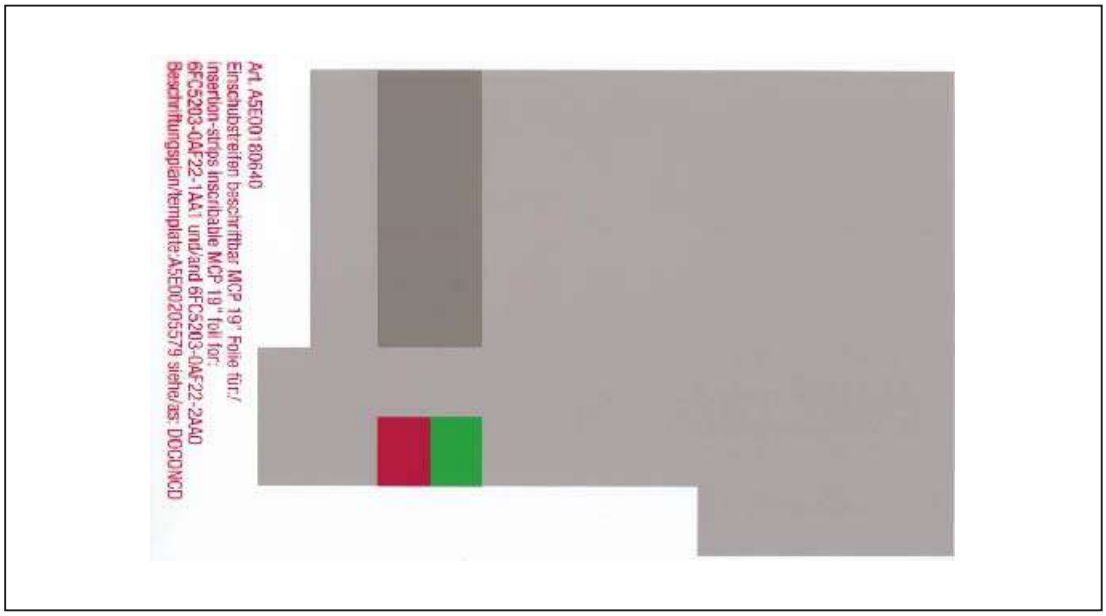

Figure 28-11 Blank film for MCP 483

Preparing slide-in labels

Instructions are given below on how to print the required key symbols on the supplied film or how to create your own individual film:

The software on the DOConCD / Catalog NC 61 (CD enclosed) includes four files for

the blank films:

- **Template_M_MCP483.doc** [default assignment for milling - standard; **(A)**]
- **Template_T_MCP483.doc** [defaults for turning; **(B)**]
- **Template_MCP483.doc** (blank template for film: Item No. A5E00205579; **(C)**]
- **Symbols.doc** Key symbols as Word file, inscription on labels as jpg file **(D)**

Files **Template_M_MCP483.doc**, **Template_T_MCP483.doc** and **Template_MCP483.doc** include a table function showing the corresponding keyboard positions.

An example of each of the MCP files (milling and turning) is given below:

(A)

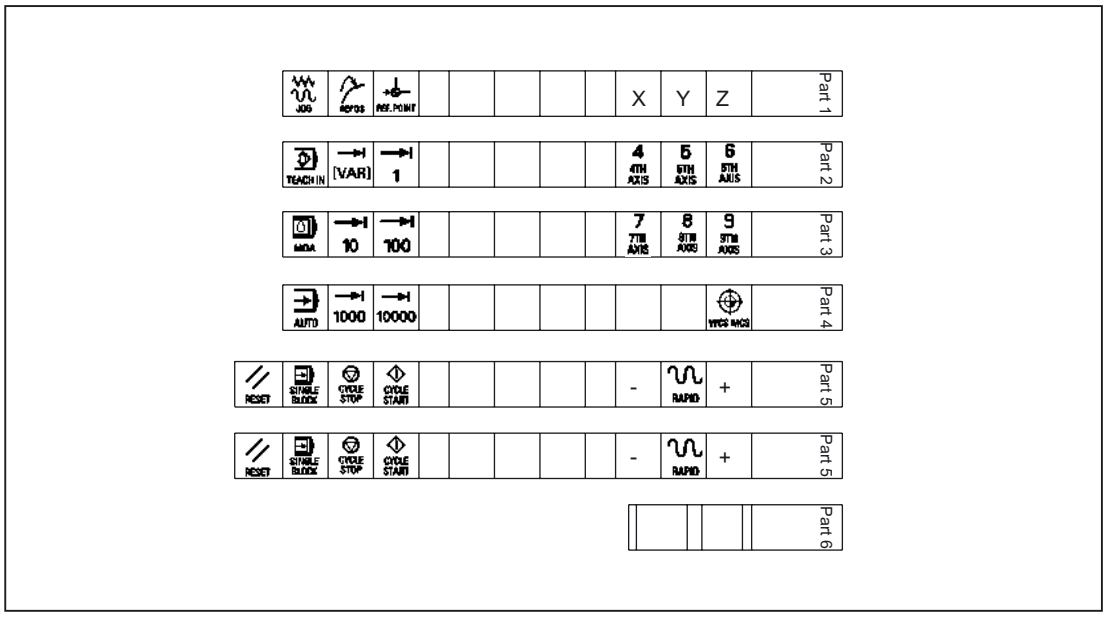

Figure 28-12 Template_M_MCP483.doc for the "Milling" version

(B)

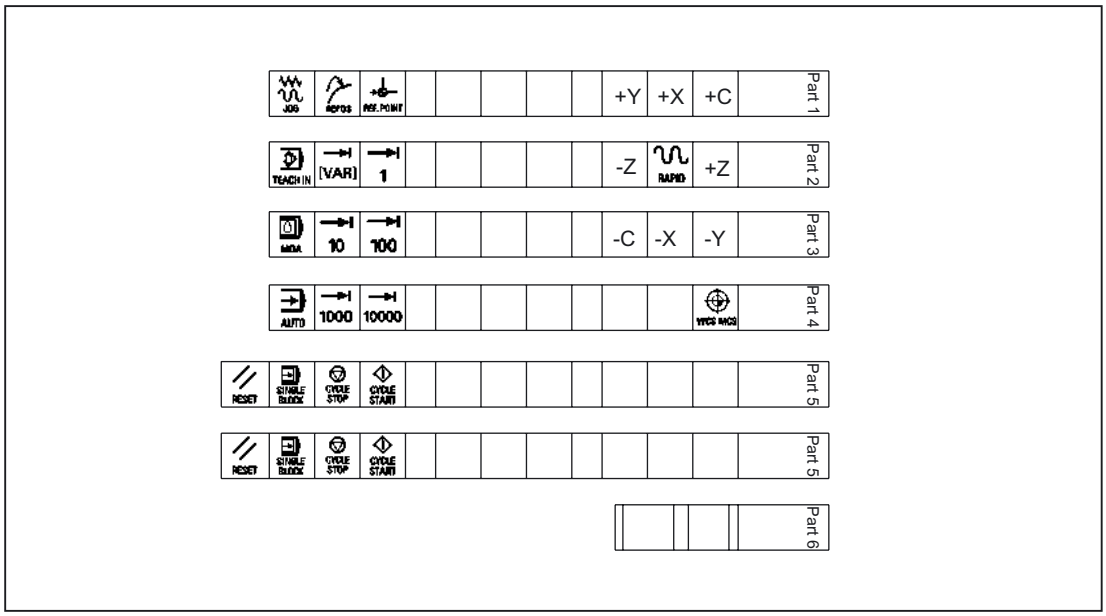

Figure 28-13 Template_T_MCP483.doc for the "Turning" version

(C)

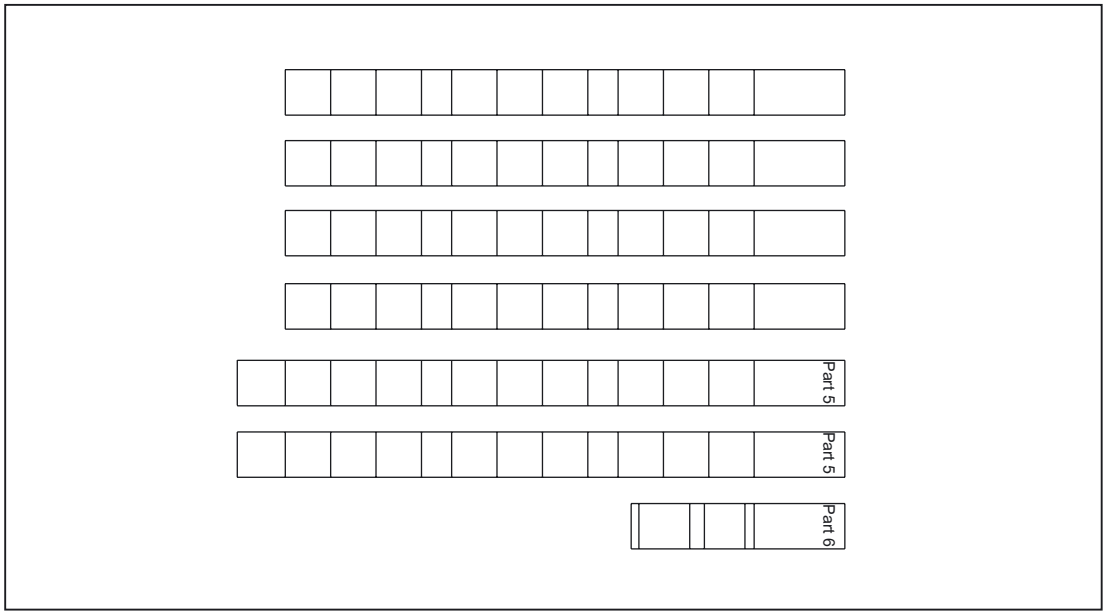

Figure 28-14 Template_MCP483.doc (blank template for film: Item No. A5E00205579)

Within the table cells the key symbol required in each case can be copied and pasted into the corresponding table field.

The vertical bars shown in the diagram do not appear on the printed-out labels.

The strip "Part5" is included twice so that it is available optionally as either a 1-color or 3-color strip.

Note

Use the "Arial" font to format text. This font is comparable to the "Univers S57" font, used by Siemens for the key labeling.

(D)

Table 28-14 File Symbols.doc

	7001		7013		7025		7124
	7002		7014		7026	+C	7125
	7003		7015		7027	+X	7126
	7004		7016	Z	7028	-Y	7127
	7005		7017		7029	+Z	7128
100%	7006		7018		7030	-X	7129
	7007		7019		7031	+Y	7130
	7008		7020	-	7032	-Z	7131
	7009		7021	+	7033	-C	7132
	7010	Y	7022		7120		
X	7011		7023		7121		
	7012		7024		7123		

Creating your own symbols

- Printing in a vector program (e.g. Designer, Freehand, CorelDraw):
  - Draw a 15 x 15 mm square, fill with the color white and give it an invisible border line.
  - Place the symbol in the center of this square.
  - Copy the entire image (square and symbol) and paste it into a Word document (Symbols.doc).
- Drawing in an image editing program (e.g. Photoshop, Picture Publisher, Paint):
  - Create a square area (e.g. 100 x 100 pixels) filled with the color white.
  - Draw the symbol in the center of this square.
  - Copy the entire image (square and symbol) and paste it into the Word document (Symbols.doc).

Dimension drawings

The following is a dimension drawing for the blank template for MCP 483:

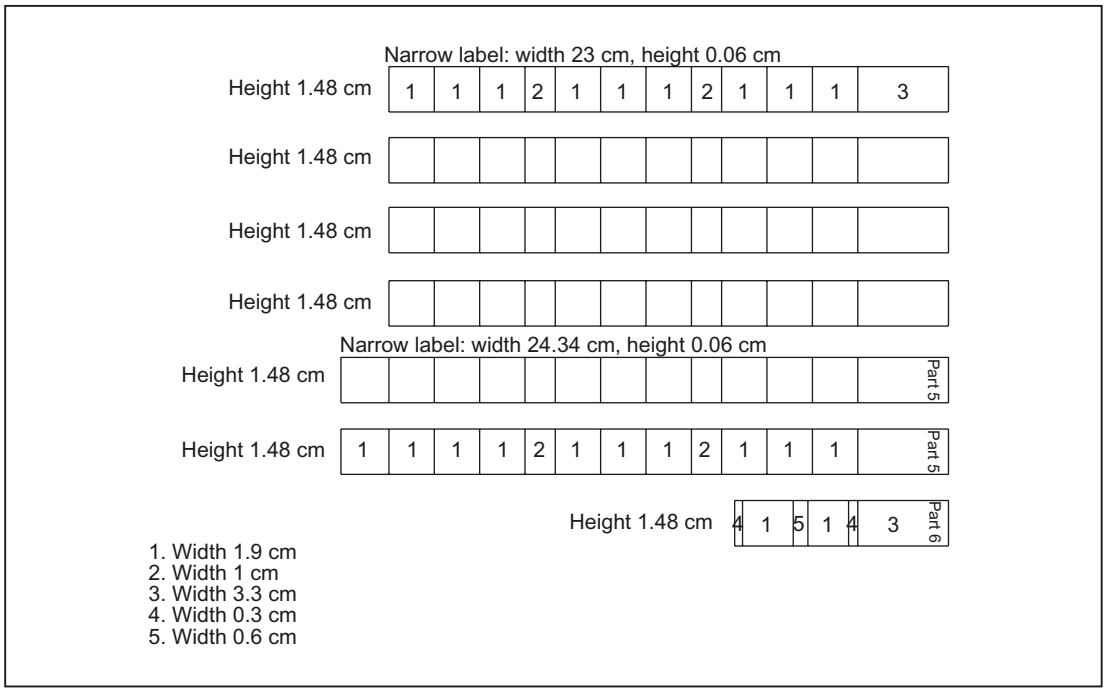

Figure 28-15 Dimension drawing for slide-in labels for MCP 483

Note

The slide-in strips are printed on the front with a laser printer. HP Color Laser Jet film C2936A is used.

To make the labels easier to slide in, they should be rounded by about 1.5 mm.

The outer lines of the strip are the cutting edge.

It is advisable to run a test print on normal paper before printing the labels on film.

Machine control panel: MCP 310

29

29.1 Description

The machine control panel MCP 310 permits user-friendly and clear operation of the machine functions. It is suitable for machine-level operation of milling, turning, grinding and special machines.

The 49 keys are equipped with user-labeled slide-in strips for adapting to specific machines. A DIN A4 film for labeling the slide-in strips is included in the delivery kit.

The machine control panel is secured from the rear using special clamps supplied with the panel.

Validity

This description applies to the machine control panel:

Type	Key type	Order No.:
MCP 310	Film	6FC5203–0AF23–1AA0

Features

Operator Controls

- Operating mode and function keys:
  - 49 keys with LEDs when connected via PROFIBUS DP
  - 48 keys with LEDs when connected via MPI
  - Direction keys for milling machines with rapid traverse override
  - Default key assignment includes 16 freely assignable customer keys
- Feed control with override feed/rapid traverse (rotary switch with 23 positions)
- Keyswitch (4 positions and 3 different keys)

Interfaces:

- PROFIBUS-DP/MPI interface
- for 6 control devices (6 inputs/6 outputs)
  (additional cable set required for control devices; see section: "Accessories")
- for 16 direct keys of OP 012/OP 015A/TP 015A when connected via PROFIBUS DP
  (Option: direct keys required).
- For 2 handwheels when connected via PROFIBUS DP (max. cable length: 5 m)
  (handwheel connection option required. The handwheel connection function depends on the NCU software.)

Expansion slots:

- 6 slots for control devices (d = 16 mm)
- 1 slot for emergency stop key or rotary override switch (to d = 22 cm)

Key type:

- Membrane keys

29.2 Operator controls and indicators

29.2.1 Front side

Overview

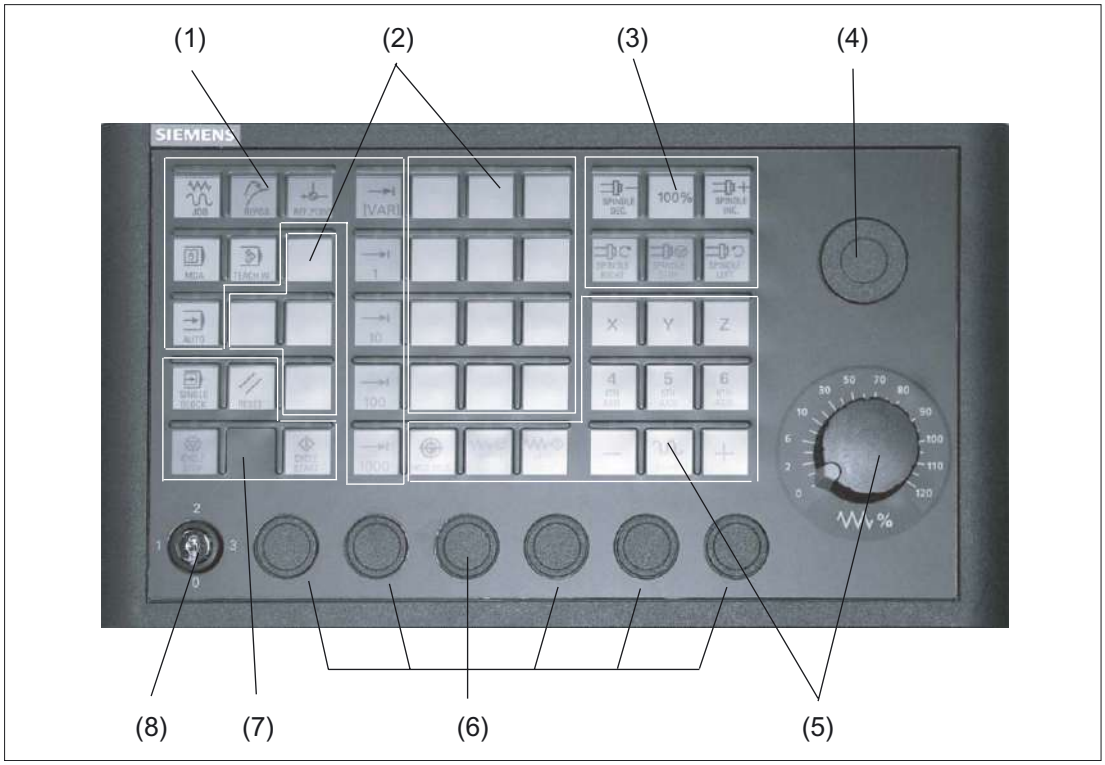

Figure 29-1 Position of control elements on machine control panel MCP 310

(1) Operating modes and machine functions
(2) 16 customer keys
(3) Spindle control
(4) Slot for EMERGENCY STOP button or spindle override switch
(5) Feed control with override switch
(6) Slots locations for control devices 16 mm*)
(7) Program control
(8) Keylock switch

*) see slots for control devices

EMERGENCY STOP key

If an EMERGENCY STOP button is added: see section: “Machine control panel MCP 483,” section: "Display and operating elements" → "Front side."

Mounting slots for control devices

⚠ WARNING
The openings for mounting control devices must not be chipped out (risk of damage!), but drilled to the required width.

29.2.2 Rear side

COM board

The control and display elements on the rear of the MCP 310 are located on the COM board (shown with a gray background in the illustration).

The detailed cutout under or above the interface name shows the position of pin 1 on the connectors.

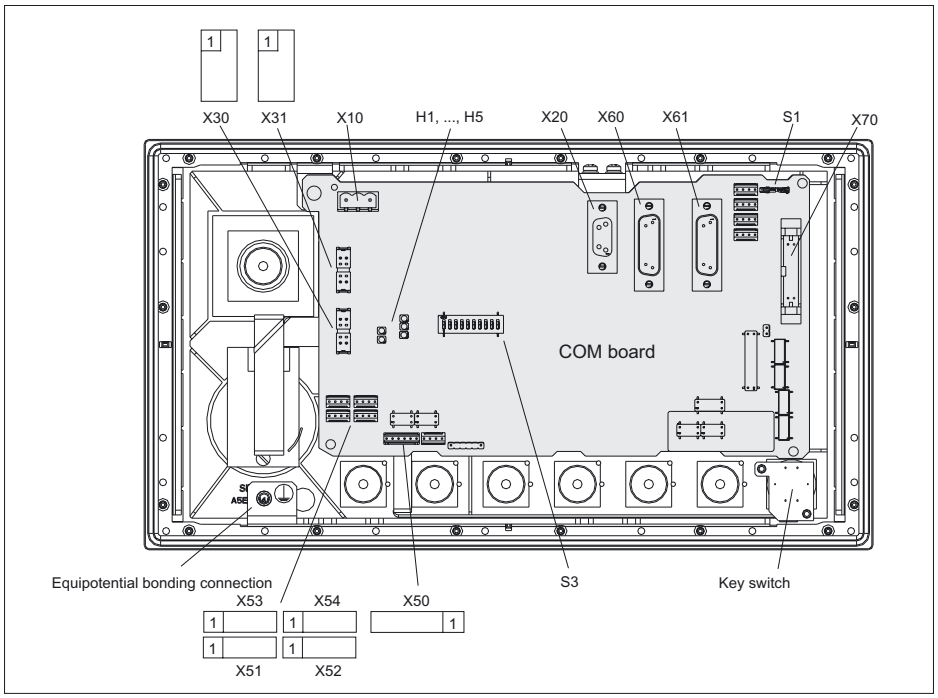

Figure 29-2 Rear of the MCP 310 showing the control and display elements and the interfaces

Description of rear control and display elements

see section: “Machine control panel MCP 483”, section: "Control and display elements" --> "Rear side"

29.3 Interfaces

Location of the interfaces

MCP 310 communication is handled by the COM board where the interfaces are located (see section: "Control and display elements" --> "Rear side").

Description of the Interfaces

see section: “Machine control panel MCP 483,” section: "Interfaces"

29.4 Mounting

Dimension drawing

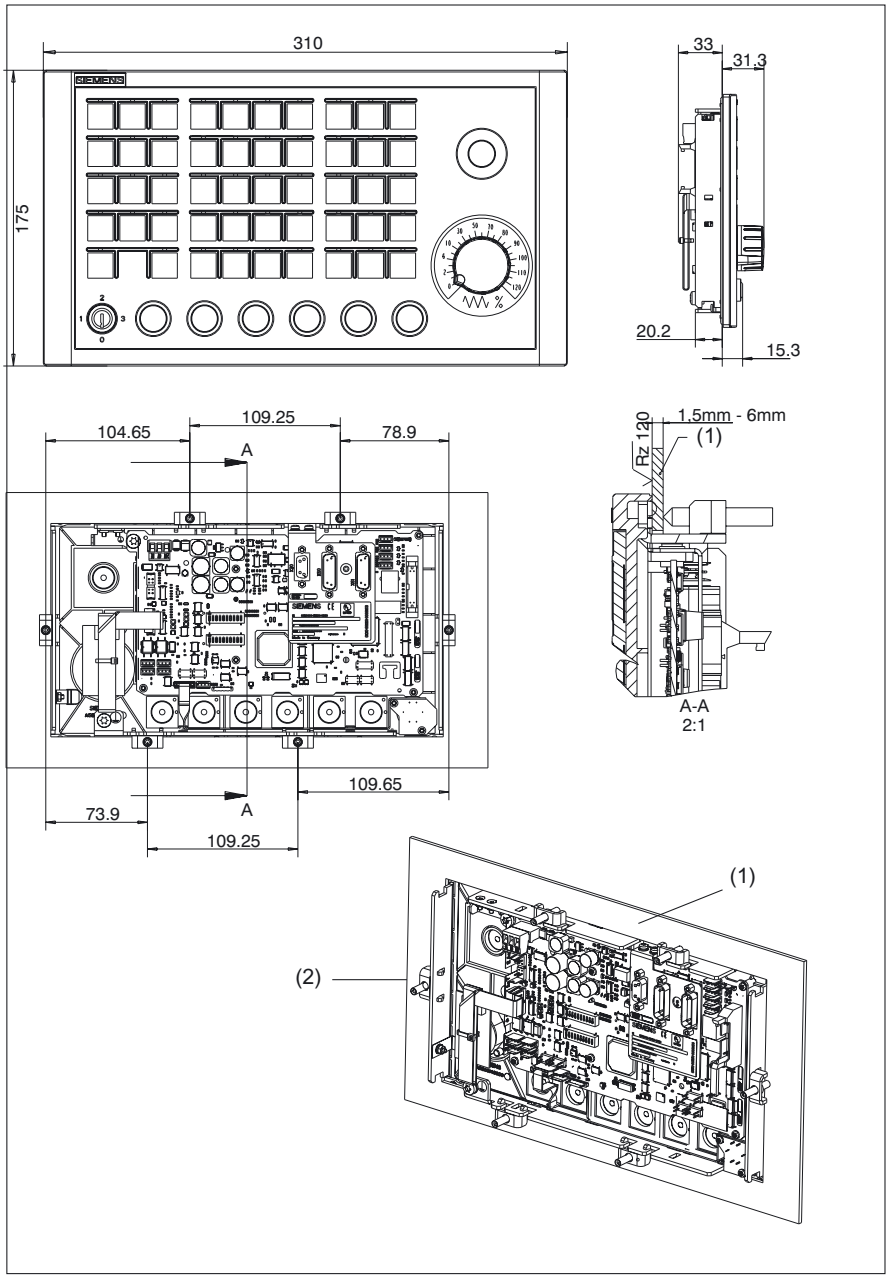

Figure 29-3 Dimension drawing for machine control panel MCP 310

(1) Mounting frame
(2) Tension jack (6 parts) - tightening torque 0.8 Nm

Tension jacks

The machine control panel is attached by means of 6 tension jacks (0.8 Nm; see dimension drawing).

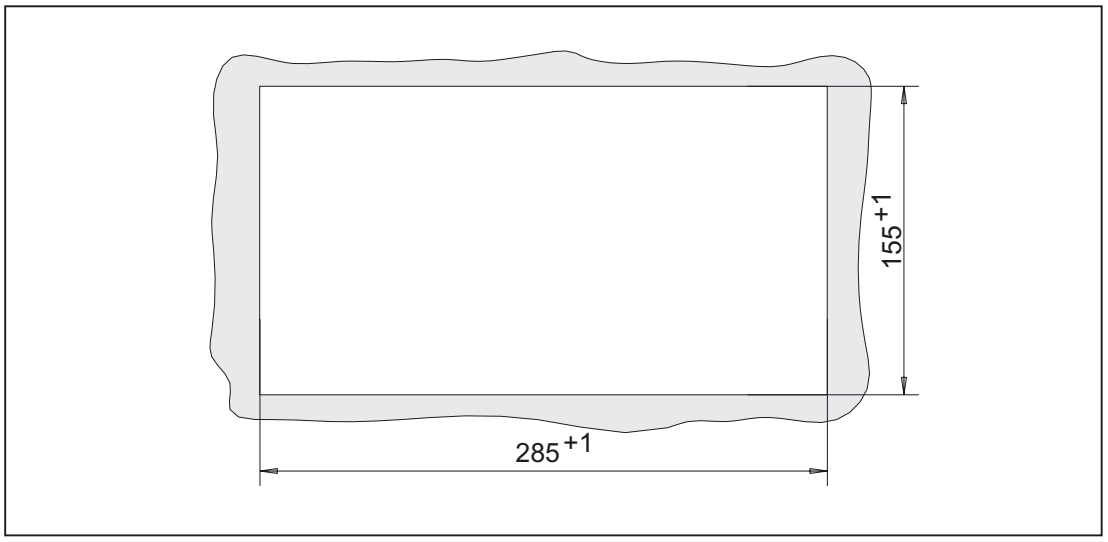

Figure 29-4 Panel cutout for machine control panel MCP 310

Mounting position

Max. 60° to the vertical. For mounting positions greater than 60°, an additional fan must be installed to keep the ambient temperature of the machine control panel constantly below 55 °C.

29.5 Settings via DIP switch S3

Choosing the connection type

The connection type is set via switches 9 and 10:

Table 29-1 Connection type

1	2	3	4	5	6	7	8	**9**	**10**	**Meaning / value**
–	–	–	–	–	–	–	–	**on**	**on**	PROFIBUS DP
–	–	–	–	–	–	–	–	Off	Off	MPI

Connection type: MPI

For connection type MPI, the MPIs are set using switches 1 to 7:

Table 29-2 MPI parameters

1	**2**	**3**	**4**	**5**	**6**	**7**	8	9	10	**Meaning / value**	
										Data transfer rate	
on	–	–	–	–	–	–	–	–		1.5 Mbaud	
Off	–	–	–	–	–	–	–	–		187.5 kbaud	
										Transmission cycle time	Reception monitoring
–	**on**	Off	–	–	–	–	–	–	–	200 ms	2400 ms
–	Off	**on**	–	–	–	–	–	–	–	100 ms	1200 ms
–	Off	Off	–	–	–	–	–	–	–	50 ms	600 ms
										MPI	
–	–	–	Off	Off	Off	Off	–	–	–	0	
–	–	–	Off	Off	Off	**on**	–	–	–	1	
–	–	–	Off	Off	**on**	Off	–	–	–	2	
–	–	–	Off	Off	**on**	**on**	–	–	–	3	
–	–	–	Off	**on**	Off	Off	–	–	–	4	
–	–	–	Off	**on**	Off	**on**	–	–	–	5	
–	–	–	Off	**on**	**on**	Off	–	–	–	6	
–	–	–	Off	**on**	**on**	**on**	–	–	–	7	
–	–	–	**on**	Off	Off	Off	–	–	–	8	
–	–	–	**on**	Off	Off	**on**	–	–	–	9	
–	–	–	**on**	Off	**on**	Off	–	–	–	10	
–	–	–	**on**	Off	**on**	**on**	–	–	–	11	
–	–	–	**on**	**on**	Off	Off	–	–	–	12	
–	–	–	**on**	**on**	Off	**on**	–	–	–	13	
–	–	–	**on**	**on**	**on**	Off	–	–	–	14	
–	–	–	**on**	**on**	**on**	**on**	–	–	–	15	

Connection type: PROFIBUS-DP

For connection type PROFIBUS DP, the PROFIBUS is set using switches 1 to 7:

Table 29-3 PROFIBUS address

1	2	3	4	5	6	7	8	9	10	Meaning / value
										PROFIBUS
Off	Off	Off	Off	Off	Off	Off	–	–	–	0
on	Off	Off	Off	Off	Off	Off	–	–	–	1
Off	on	Off	Off	Off	Off	Off	–	–	–	2
on	on	Off	Off	Off	Off	Off	–	–	–	3
:	:	:	:	:	:	:	–	–	–	: (etc.)
on	Off	on	on	on	on	on	–	–	–	125
Off	on	on	on	on	on	on	–	–	–	126

Hardware code

The code for the series is set with switch 8:

Table 29-4 Hardware code

1	2	3	4	5	6	7	8	9	10	Meaning / value
–	–	–	–	–	–	–	Off	–	–	Series

Standard setting

The default setting for DIP switch S3 is:

- Data transfer rate: 1.5 Mbaud
- Transmission cycle time: 100 ms; reception monitoring 1200 ms
- Bus address: 6
- Connection type: MPI

Table 29-5 Standard setting

1	2	3	4	5	6	7	8	9	10	Meaning / value
on	Off	on	Off	on	on	Off	Off	Off	Off	Series

Note

Via switches 9 and 10 of the DIP switch S3 (see Section: "Operating and Display Elements" → "Rear Side") the connection type, i.e. the transfer protocol and the interface used are set:

MPI
If MPI is selected, the MPI parameters are set using switches 1 to 7.

PROFIBUS DP
If PROFIBUS DP is selected, the PROFIBUS address is set using switches 1 to 7.

The same code should be used for the standard hardware (switch 8 = off).

29.6 Connection via PROFIBUS DP

29.6.1 Overview

This section describes:

- Requirements for adding a DP slave MCP to the hardware configuration for a SIMATIC S7 project.
- Configuring a DP slave MCP with STEP7 "HW config."
- Details of how to link the DP slave MCP to the basic PLC program and user program (optional)

Note

The instructions given in this chapter are essentially limited to the special requirements for configuring the DP slave MCP. For more details about working with SIMATIC STEP 7 please refer to the relevant SIMATIC documentation or online help.

Note

Both units can be linked up using the 20-pin ribbon cable supplied in order to transfer the direct control key signals of the operator panel front to the COM board of the machine control panel. The direct control key module therefore no longer needs to be connected.

29.6.2 Prerequisites

The following components are needed as prerequisites for adding a DP slave MCP to the hardware configuration:

- SIMATIC STEP 7
- GSD file of DP slave MCP
- Graphics files of DP slave MCP

SIMATIC STEP 7

SIMATIC STEP 7 is required in the following version or later:

- SIMATIC STEP 7 version 5.2 or later, Service Pack 1

GSD file

The GSD file of the DP slave MCP is required in the following version or later:

- SI008109.GSD version 1.0 or later

A GSD file contains all the properties of a DP slave in ASCII format. For each DP slave SIMATIC STEP 7 requires a module-specific GSD file so that the DP slave can be found in the hardware catalog.

The DP slave MCP is shown in SIMATIC STEP 7 in the hardware catalog of “HW Config” under the following path:

- Profile: **Standard**
  PROFIBUS–DP > Other field devices > NC/RC > Motion Control > SINUMERIK MCP

If the module is not displayed, the GSD file must be installed. To do this, in "HW config" use menu command **Tools > Install new GSD file**. Before installing the GSD file, please read the following instructions concerning the graphics files.

Graphics files

The graphics files belonging to the GSD file:

- SI8109_N.BMP
- SI8109_S.BMP

are used to display the DP slave MCP in the "HW config" station window.
They are automatically installed by STEP 7 when the GSD file is installed. They must be located in the same directory as the GSD file.

29.6.3 Functions of the machine control panel

The machine control panel offers the following functions:

- Standard
- Handwheel
- Additional I/Os

Standard

The function transfers input/output data from the function keys and user-specific keys and outputs:

- Input data: 8 bytes
- Output data: 8 bytes

The input/output data for machine control panel MCP 310 is compatible with the input/output data from the previous machine control panel OP 032S.

Handwheel

The function transfers the absolute values for the two handwheels that can be connected to the machine control panel:

Absolute value	1. Handwheel	Absolute value	2. Handwheel
Low byte			High byte

For each handwheel the current handwheel value is transferred as a 16-bit absolute value relative to the starting value. The starting value for the sensor counter in the handwheel is 0.

The absolute values are transferred in big endian format.

The data for both handwheels is always transferred. The absolute value for a handwheel that is not connected is always 0.

Additional I/Os

The function transfers the data for all non-standard inputs/outputs:

- Direct control keys
- Customer keys: 6 signals (bit 0 to bit 6)
- Rotary switch

with the following distribution:

- Input data: 5 bytes

Direct control keys	(OP 012)	User keys	1. Rotary switch	2. Rotary switch
Low byte				High byte

- Output data: 2 bytes

Reserved always 0	Customer LEDs
Low byte	High byte

29.6.4 Configuring the DP slave MCP

This section describes how to configure a DP slave MCP with reference to the hardware configuration for a SIMATIC S7 project shown in Figure by way of example.

The hardware configuration has the following modules:

- SIMATIC station 300 with SINUMERIK 810D/840D and PLC 317-2DP
- SINUMERIK MCP with module: standard, handwheel, extended

Procedure

Configuring the DP slave MCP as an S7 project involves the following steps:

1. Add the DP slave MCP to the configuration **(1)**
2. Set the PROFIBUS address
3. Add the appropriate module to the DP slave MCP according to the functions required. **(2)**
4. Set the I/O addresses for the individual slots.

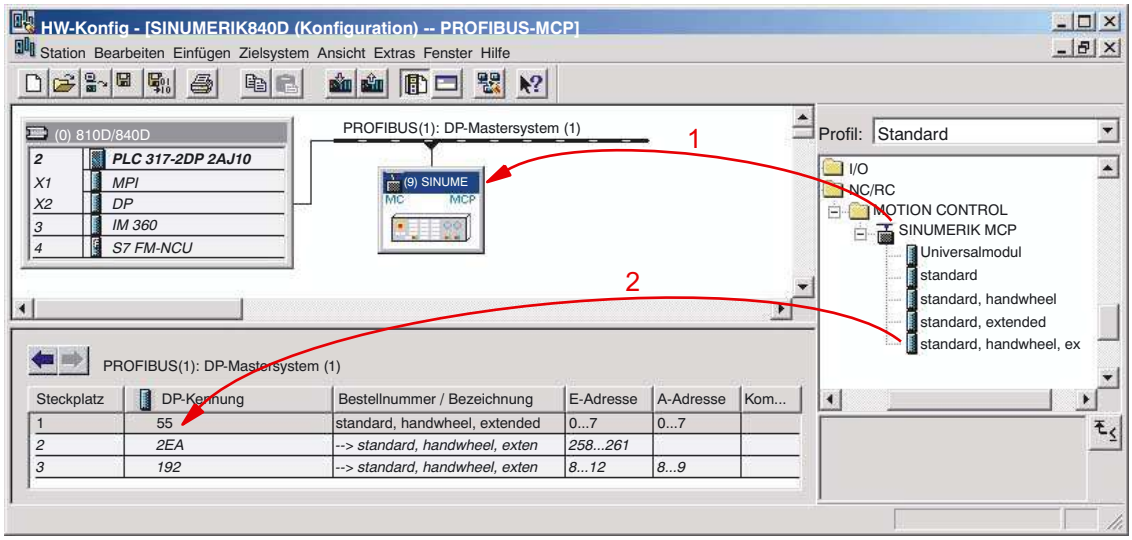

Figure 29-5 Configuration with DP slave MCP

Requirements: S7 project

The following status is required for the S7 project to which the DP slave MCP is to be added:

- You have created the S7 project
- You have set up a SIMATIC 300 station with PROFIBUS master-capable SINUMERIK controller

Adding a DP slave MCP

To add a DP slave MCP to the configuration, open the hardware catalog using the menu command View > Catalog **View > Catalog**.

The DP slave MCP can be found at:

- Profile: **Standard**
  PROFIBUS–DP > Other field devices > NC/RC > Motion Control > SINUMERIK MCP

Click with the left mouse button on the DP slave MCP (SINUMERIK MCP) in the hardware catalog and drag it onto the DP master system in the station window by holding down the left mouse button.

The DP master system is displayed in the station window with the following symbol:

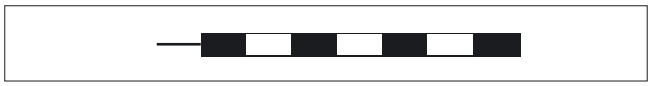

When you release the left mouse button, the DP slave MCP is added to the configuration.

Note

As you drag the DP slave the cursor appears as a circle with a slash through it.
When the cursor is positioned exactly over the DP master system, it changes to a plus sign, and the DP slave can be added to the configuration.

PROFIBUS parameters

Once you have added the DP slave MCP to the configuration, the "Properties - PROFIBUS interface SINUMERIK MCP" dialog box is displayed.

The following PROFIBUS parameters must either be set or verified:

- PROFIBUS address
- Data transfer rate
- Profile

Dialog

Dialog: Properties - PROFIBUS interface SINUMERIK MCP						
	Tab card: parameters					
		Address: **<PROFIBUS address>** Button: “Properties...”				
			Dialog: Properties – PROFIBUS			
				Tab card: Network settings		
					Data transfer rate: **12 Mbaud** Profile: **DP**	
			OK			
OK						

Note

The PROFIBUS address of the DP slave MCP set in the S7 project must match the PROFIBUS address set on the module (DIP switch S3) (see Section: "Settings via DIP switch S3")

There is **no automatic adjustment!**

The following data must agree:

1. SIMATIC S7 configuration of DP slave MCP
PROFIBUS address

2. Machine control panel MCP 310
PROFIBUS address (DIP switch S3)

Adding a module

The active functions and hence the number of user data elements to be transferred are chosen by selecting the appropriate pre-configured module. The modules in the hardware catalog are positioned below the DP slave MCP. The following modules are available:

- *Universal module* (not applicable)
- standard
- standard, handwheel
- standard, extended
- standard, handwheel, extended

Module: standard

The module transfers the data for the "Standard" function:

- Input data: 8 bytes

Standard data (8 bytes)

- Output data: 8 bytes

Standard data (8 bytes)

Module: standard, handwheel

The module transfers the data for the "Standard" and "Handwheel" functions:

- Input data: 12 bytes

Standard data (8 bytes)	Absolute value 1st handwheel (2 bytes)	Absolute value 2nd handwheel (2 bytes)
Low byte		High byte

- Output data: 8 bytes

Standard data (8 bytes)

Module: standard, extended

The module transfers the data for the "Standard" and "Additional I/Os" functions:

- Input data: 13 bytes

Standard data (8 bytes)	Direct control keys (OP 012) (2 bytes)	Customer keys (1 byte)	1. Rotary switch (1 byte)	2. Rotary switch (1 byte)
Low byte				High byte

- Output data: 10 bytes

Standard data (8 bytes)	Reserved (1 byte)	Customer LEDs (1 byte)
Low byte		High byte

Module: standard, handwheel, extended

The module transfers the data for the "Standard", "Handwheel" and "Additional I/Os" functions:

- Input data: 17 bytes

Standard data (8 bytes)	Absolute value 1st handwheel (2 bytes)	Absolute value 2nd handwheel (2 bytes)	Direct control keys (OP 012) (2 bytes)
Low byte			

Customer keys (1 byte)	1. Rotary switch (1 byte)	2. Rotary switch (1 byte)
		High byte

- Output data: 10 bytes

Standard data (8 bytes)	Reserved (1 byte)	Customer LEDs (1 byte)
Low byte		High byte

I/O addresses

If you add a module to slot 1 of the DP slave MCP, the input/output addresses are automatically assigned by STEP 7.

Double clicking with the left mouse button on a slot opens the "Properties - DP slave" dialog box. The starting addresses for the I/O data for the slot can be set here.

29.6.5 Linking the DP slave MCP

This section describes how to link the DP slave MCP

- in the basic PLC program for transferring the standard input / output data in the VDI interface
- to the PLC user program (optional) to implement a user-specific response to a module failure

Note

"Handwheel" function
The "Handwheel" function is not currently supported by the basic PLC program.

"Additional I/Os" function
Processing of additional I/O data is the sole responsibility of the user (machine manufacturer) and is not supported by the basic PLC program.

PLC basic program

In order to transfer the standard I/O data for the DP slave MCP using the basic PLC program, the corresponding I/O address range must be added to the communication parameters for function block FB1.

Function block FB1

The communications parameters of the MCP are called MCPx... (x = 1 or 2) in function block FB1. A maximum of 2 machine control panels are supported by the basic PLC program.

To synchronize several MCPs, the PLC program must be adapted accordingly. This is the user's (machine manufacturer's) responsibility.

To operate a machine control panel MCP 310 as a DP slave, only the following parameters are relevant:

MCPNum:	INT	// see below: **Note**
MCP1In:	POINTER	// Address of input signals
MCP1Out:	POINTER	// Address of output signals

The MCP2... parameters are only needed if a 2nd MCP is used in addition to the 1st MCP:

MCP2In:	POINTER	// Address of input signals
MCP2Out:	POINTER	// Address of output signals

The parameters listed below serve to synchronize two MCPs:

MCP1Stop:	BOOL	// Transfer of relevant operator components:
MCP2Stop:	BOOL	// FALSE = start; TRUE = stop
MCP1NotSend:	BOOL	// Send and receive mode of the relevant
MCP2NotSend:	BOOL	// operator components:
		// FALSE = Send and receive is active
		// TRUE = only receive is active

Note

Parameter: MCPNum
Up to and including basic PLC program, Version 7.1, for the parameter:
MCPNum, 0 should always be specified.

Parameter: MCPxStop and MCPxNotSend
These parameters are irrelevant for connection via PROFIBUS DP.

References

A detailed description of the basic PLC program and/or FB 1 function block can be found in:

/FB1/	Function description of bases: Basic P3 PLC program
	Section: FB 1: RUN_UP Basic program, startup section

VDI interface parameter assignment

The following function blocks can be used to assign the VDI interface:

- FC 24: Machine control panel MCP 310, version M (milling)

Note

Function blocks FC 19, FC 24 and FC 25 are part of the basic PLC program. It is the user's (machine manufacturer's) responsibility to call the block correctly and/or assign the interface the appropriate parameters.

References

A detailed description of the function blocks for transferring the machine control panel signals to the VDI interface can be found in:

/FB1/	Function description of bases: Basic P3 PLC program
	Section: FC 19: MCP_IFM ...
	Section: FC 24: MCP_IFM2 ...
	Section: FC 25: MCP_IFT ...

Example

The following example shows the communication parameter settings for function block FB 1 for a machine control panel:

MCPNum	:= 0	// Number of active MCP
MCP1In	:= P#E 0.0	// Address of input data (8 bytes)
MCP1Out	:= P#A 0.0	// Address of output data (8 bytes)
MCP1StatSend	:= P#A 0.0	// Presetting; no meaning
MCP1StatRec	:= P#A 0.0	// Presetting; no meaning
MCP1BusAdr	:= 0	// Presetting; no meaning
MCP1Timeout	:= S5T#700MS	// Presetting; no meaning
MCP1Cycl	:= S5T#200MS	// Presetting; no meaning
MCPMPI	:= FALSE	// MCP/HT 6 is operated on the “expanded ” MPI bus
MCP1Stop	:= FALSE	// Presetting; no meaning
MCP1NotSend	:= FALSE	// Presetting; no meaning
MCPSDB210	:= FALSE	// Presetting; no meaning

PLC user program

If an MCP is connected via PROFIBUS DP, the basic PLC program does not check for module failure.

In this case the MCP is monitored by a standard mechanism to monitor the active DP slave:

- PLC operating system
- PROFIBUS controller

If a failure of a DP slave MCP is detected, the PLC defaults to STOP.

Customized response

The following organization blocks can be added to the PLC user program to customize the response to a DP slave MCP failure:

- OB 82: Diagnostics interrupt
- OB 86: Rack failure

Please refer to the corresponding SIMATIC literature for details of linking organization blocks and evaluating diagnostic data.

Note

In the event of the failure of a machine control panel connected via OPI/MPI, the following alarm is triggered by the basic PLC program:

• Alarm "40026x machine control panel (x+1) failure"; with x = 0, 1

If the machine control panel is being operated as a DP slave, the user (machine manufacturer) is responsible for triggering a corresponding alarm.

29.6.6 Input/output image of DP slave MCP

Arrangement: Keys and LEDs

A key and the LED positioned above it form a logical unit. The key and the LED have the same number.

- Key: Sxy = Key number xy
- LED: LEDxy = LED number xy

The Fig. shows the arrangement of keys and LEDs on the machine control panel together with their internal designation. For the sake of clarity, the LED designations are not shown in full.

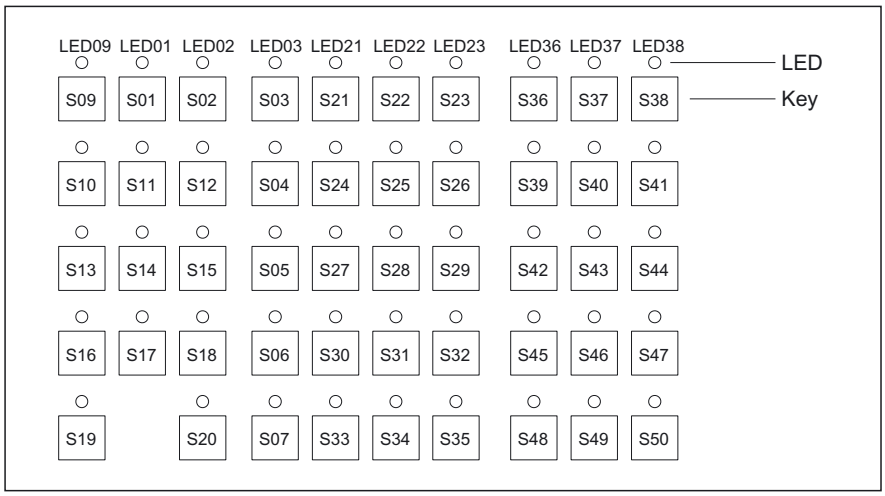

Figure 29-6 Designation of keys and LEDs

Input image

Table 29-6 Arrangement of key signals in the input image of the DP slave MCP

Signals from machine control panel (keys)								
Byte	**Bit7**	**Bit6**	**Bit5**	**Bit4**	**Bit3**	**Bit2**	**Bit1**	**Bit0**
EB n+0	*Spindle override*				Operating mode			
	*NC stop S19	SP- S36	Sp100% S37	SP+ S38	Single Block S16	JOG S09	MDA S10	AUTO S13
EB n+1	Spindle				*Keyswitch position 3*	Machine function		
	NC Start S20	SP right S39	*SP Stop S40	SP left S41		REF S02	REP S01	TEACH S11
EB n+2	Feed rate		Mach. fu. INC VAR S03	*Keyswitch position 0*	Machine function			
	Feed Start S35	*Feed Stop S34			INC 1000 S07	INC 100 S06	INC 10 S05	INC 1 S04
EB n+3	RESET S17	*Keyswitch position 2*	*Keyswitch position 1*	*Feed rate override*				
				I	D	C	B	O
EB n+4	Direction keys			Optional customer keys				
	+ S50	- S48	Rapid traverse S49	KT4 X52.2	KT3 X52.1	KT2 X51.3	KT1 X51.2	KT0 X51.1
EB n+5	Free K. T16 S18	Opt. K. KT5 X52.3	Axis selection					
			6 S47	5 S46	4 S45	Z S44	Y S43	X S42
EB n+6	Freely assignable customer keys				WCS/MCS S33	Freely assignable customer keys		
	T9 S29	T10 S30	T11 S31	T12 S32		T13 S12	T14 S14	T15 S15
EB n+7	Freely assignable customer keys							
	T1 S21	T2 S22	T3 S23	T4 S24	T5 S25	T6 S26	T7 S27	T8 S28
Signals marked with * are inverse signals								

Output image

Table 29-7 Arrangement of LED signals in the output image of the DP slave MCP

Signals to machine control panel (LEDs)								
Byte	**Bit7**	**Bit6**	**Bit5**	**Bit4**	**Bit3**	**Bit2**	**Bit1**	**Bit0**
AB n+0	Spindle override				Operating mode			
	*NC Stop LED19	SP- LED36	SP100% LED37	SP+ LED38	Single block LED16	JOG LED09	MDA LED10	AUTO LED13
AB n+1	Spindle				Machine function			
	NC Start LED20	SP right LED39	*SP Stop LED40	SP left LED41	Reset [1] LED17	REF LED02	REP LED01	TEACH LED11
AB n+2	Feed rate		Mach. Fu.	*not used*	Machine function			
	Start LED35	*Hold LED34	var. INC LED03		1000 INC LED07	100 INC LED06	10 INC LED05	1 INC LED04
AB n+3	*not used*	*not used*	*not used*	*not used*	*not used*	*not used*	*not used*	*not used*
AB n+4	Direction keys			Optional customer keys				
	+ LED50	- LED48	Rapid traverse LED49	KT4	KT3	KT2	KT1	KT0
AB n+5	Free K. T16 LED18	Opt. K. KT5	Axis selection					
			6 LED47	5 LED46	4 LED45	Z LED44	Y LED43	X LED42
AB n+6	Freely assignable customer keys				WCS/MCS LED33	Freely assignable customer keys		
	T9 LED29	T10 LED30	T11 LED31	T12 LED32		T13 LED12	T14 LED14	T15 LED15
AB n+7	Freely assignable customer keys							
	T1 LED21	T2 LED22	T3 LED23	T4 LED24	T5 LED25	T6 LED26	T7 LED27	T8 LED28
[1]) New signal for MCP 310								

29.7 Technical specifications

Security				
Safety class	III; PELV acc. to EN 50178			
Degree of protection per EN 60529	Front: IP65	Keyswitch: IP54	Rear side: IP00	
Approvals	CE			
Electrical specifications				
Input voltage	DC 24 V			
Power consumption, max.	Board 7 W	Lamps 7.2 W (6 x 1.2 W) *)	Handwheels 2 x 0.9 W	Total 16 W
Mechanical data				
Dimensions	Width: 310 mm Height: 175 mm		Depth: 65 mm Mounting depth: 33 mm	
Distance from NCU/PCU	MPI interface 200 m PROFIBUS DP: 100 m			
Weight	Approx. 1.2 kg			
Mechanical ambient conditions	**Operation**		**Transport** (in transport packaging)	
Vibratory load	10 -58 Hz: 0.015 mm 58 -200 Hz: 19.6 m/s^2 3M6 per EN 60068-2-6		5 -9 Hz: 3.5 mm 9 -200 Hz: 9.81 m/s^2 2M2 per EN 60068-2-27	
Shock stressing	150 m/s^2, 11 ms, 18 shocks 3M4 per EN 60721-3-3		150 m/s^2, 11 ms, 18 shocks 2M2 per EN 60721-3-2	
Climatic ambient conditions				
Cooling	By natural convection			
Condensation, spraying water and icing	Not permitted			
Supply air	Without caustic gases, dusts and oils			
	Operation		**Storage/shipping** (in transport packaging)	
Applicable standards	EN 60721-3-3		EN 60721-3-1 / -3-2	
Climate class	3K5		1K3 / 2K4	
Temperature limits	0 ... 45 ºC (at front) 0 ... 55 ºC (at rear)		-20 ... 60ºC	
Temperature change	Max. 10 K/h		Max. 18 K/h	
Limits for relative humidity	5 ... 80% at 25°C		5 ... 95% at 25°C	
Permissible change in the relative air humidity	max. 0.1% /min			
*) If the outputs for the illuminated pushbuttons (X53/X54) are loaded with the max. permissible current of 0.3 A, this results in additional power consumption of 36 W. The total power consumption is then 52 W.				

29.8 Replacement parts

29.8.1 Overview

Table 29-8 Spare parts for machine control panel MCP 483

Name	Description	Quantity	Order No.:
Key switch	Keyswitch with key	1	6FC5247–0AF02–0AA0
Sets of keys	Set of keys (10 sets) for machine control panel	1 set	6FC5148–0AA03–0AA0
Set of tension jacks	Tension jack set (9 items) for supplementary components with 2.5 mm profile, length 20 mm	1 set	6FC5248–0AF14–0AA0
	Obsolescent type (up to 12/2004)		
Override for rotary spindle switch	Spindle/rapid traverse override, rotary switch 1x16G, T=24, cap, button, pointer, spindle and rapid-traverse dials	1	6FC5247–0AF12–0AA0
Rotary feed override switch	Feed rate/rapid traverse, override rotary switch 1x23G, T=32, cap, button, pointer, feed and rapid-traverse dials	1	6FC5247–0AF13–0AA0
	Replacement type (as of 01/2005)		
Override for rotary spindle switch	Spindle/rapid traverse override, solid-state rotary switch 1x16G, T=24, cap, button, pointer, spindle and rapid-traverse dials	1	6FC5247–0AF12–1AA0
Rotary feed override switch	Feed rate/rapid traverse, override solid-state rotary switch 1x23G, T=32, cap, button, pointer, feed and rapid-traverse dials	1	6FC5247–0AF13–1AA0

29.8.2 Replacement

Replacement of the rotary switch is described in chapter: "15" TFT Operator Panel, 416 mm wide, without videolink receiver".

29.9 Accessories

29.9.1 Overview

Accessories and options for machine control panel MCP 310

Component	Description	Quantity	Order No.:
	Variant A		
EMERGENCY STOP button	Actuating element 16 mm Emergency Stop mushroom-head pushbutton (red)	1	3SB2000–1AC01
	Switching element with one contact, 1NO contact	1	3SB2404–0B
	Switching element with one contact, 1 NC contact	1	3SB2404–0C
	Holder for 2 switching elements	1	3SB2908–0AA
	Variant B		
EMERGENCY STOP button	22 mm actuating element, emergency stop mushroom pushbutton, red, mushroom-shaped button and bracket	1	3SB3000-1HA20
	Contact block with 2 contacts 1 NO + 1 NC, 2-pole screw terminal	1	3SB3400-0A
Slide-in labels-	SINUMERIK 810D/840D inscribable slide-in labels (3 DIN A4 films)	1 set	6FC5248–0AF22–1AA1
Cable set for additional control devices	SINUMERIK 810D/840D cable set for additional control devices Length: 500 mm	1 set	6FC5247–0AA35–0AA0
Cable for handwheel connection *)	SINUMERIK 810D/840D, cable for handwheel connection, max. cable length: 5 m	1	6FX8002–2CP00–1xxx
Direct keys/handwheel connection	Direct keys/handwheel connection Option for 6FC5203–0AF22–1AA1/–0AF23–1AA0	1	6FC5252–0AF00–0AA0
*) see Figure			

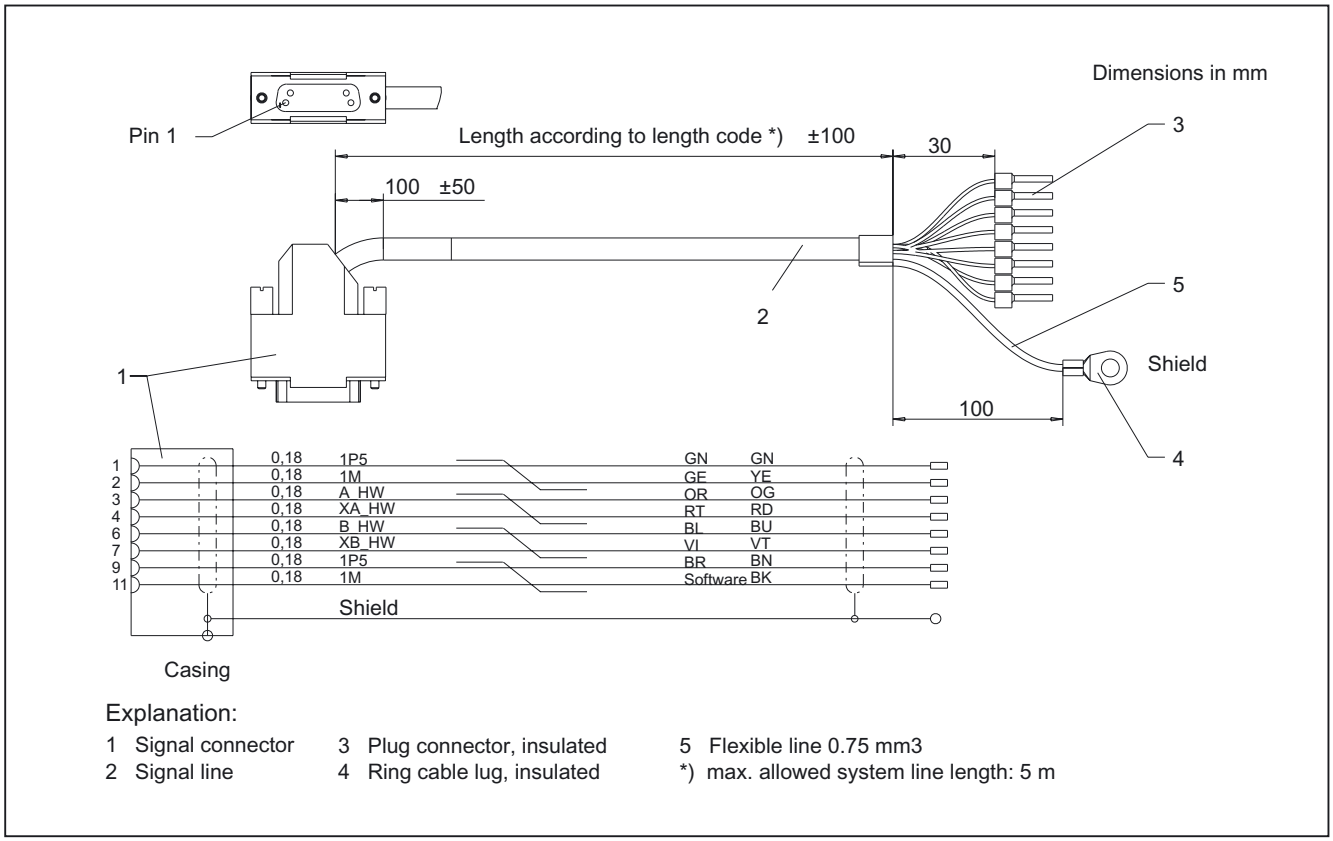

Figure 29-7 Connecting cable for handwheel

Order no. 6FX8002-2CP00-1xxx (xx is the length code: A = 0, B = 1, etc.)

29.9.2 Labeling the slide-in labels

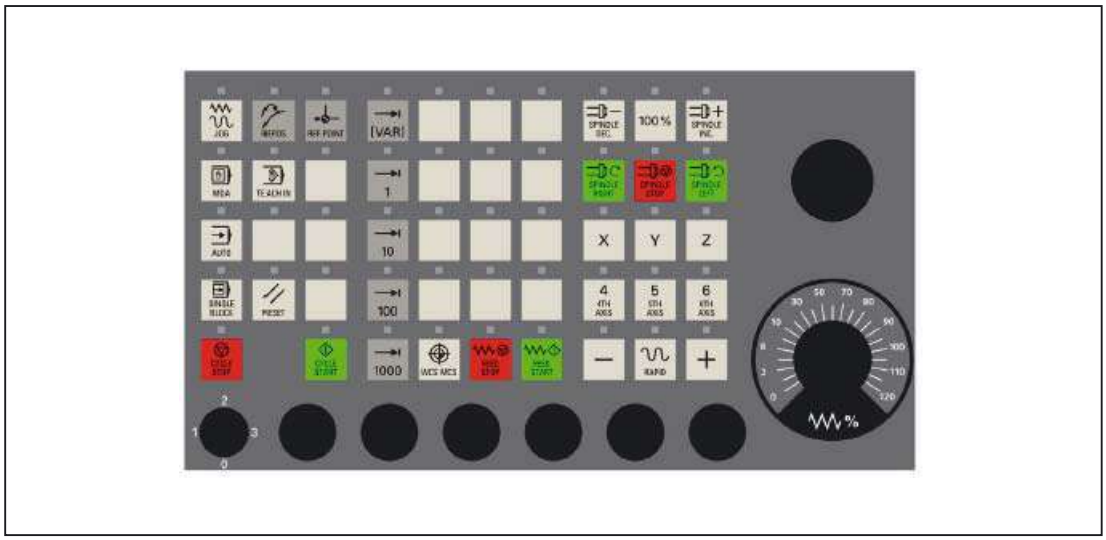

Figure 29-8 Machine control panel MCP 310

The figure shows the Machine Control Panel (MCP) in its standard version.

You can create your own slide-in labels in order to change the key labels. A printable blank film (A4) is supplied with the panel for this purpose.

A spare parts kit containing three blank films is also available:
MLFB: 6FC5248–0AF23–1AA0 (Item No. A5E00179115)

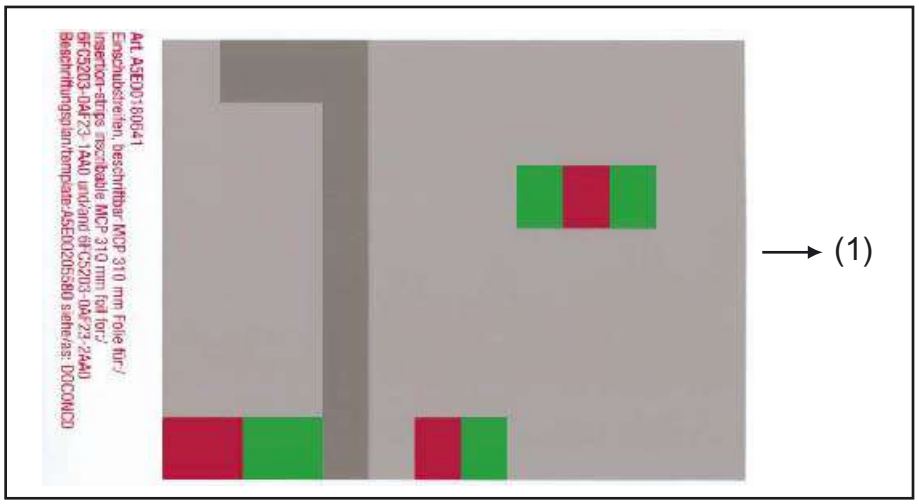

Figure 29-9 Blank film for MCP 310

(1) Print direction

Files for printing the blank film

The DOConCD / Catalog NC 61 (CD enclosed) contains three files for printing the blank films:

- **Template_M_MCP310.doc** [defaults for milling - standard shipped file; **(A)**]
- **Template_MCP310.doc** (blank template for film: Item No. A5E00205580; **(B)**]
- **Symbols.doc** Key symbols as Word file, inscription on labels as jpg file **(C)**

(A)

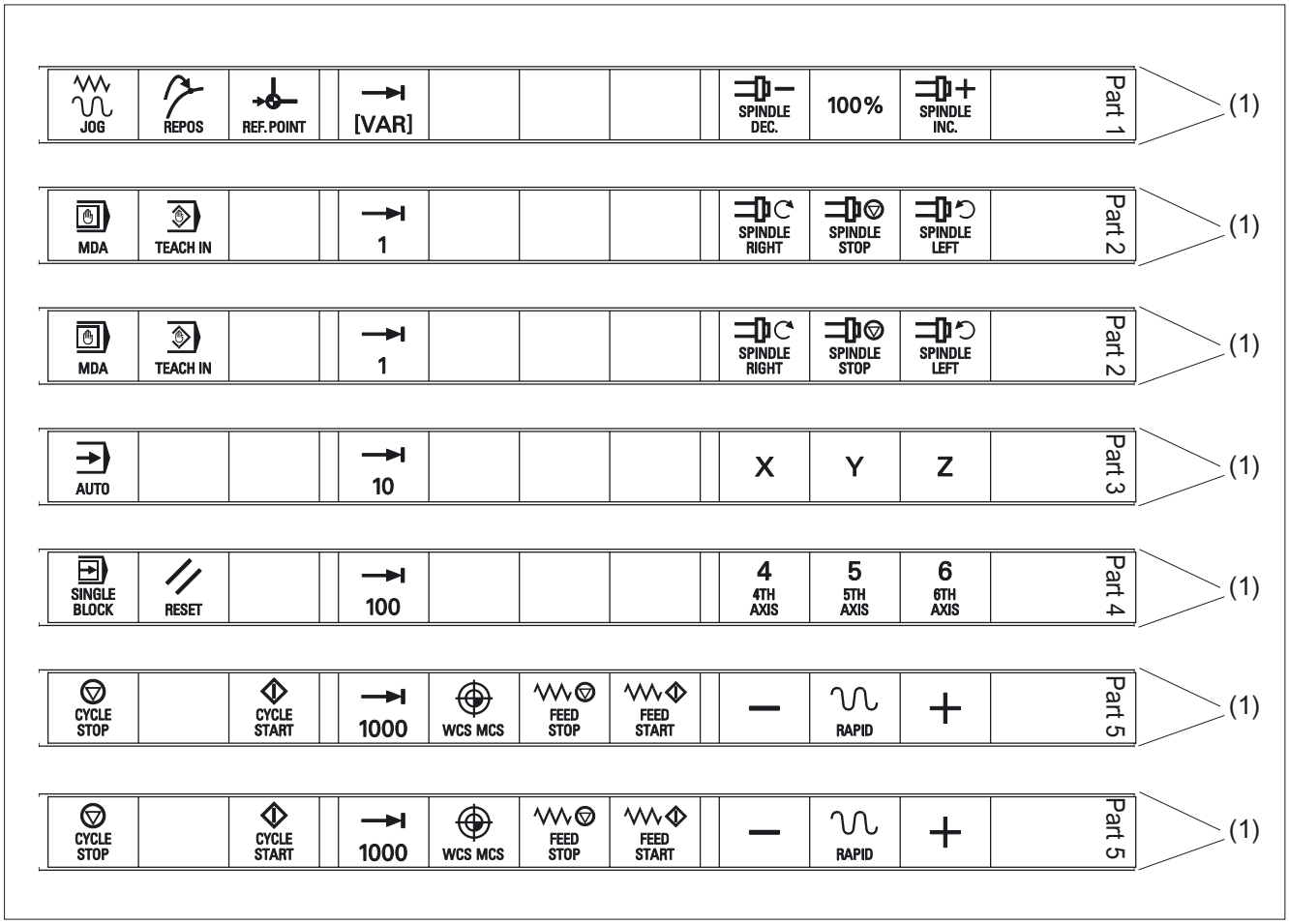

Figure 29-10 Template_M_MCP310.doc for the "Milling" version

(1) Outer edges

(B)

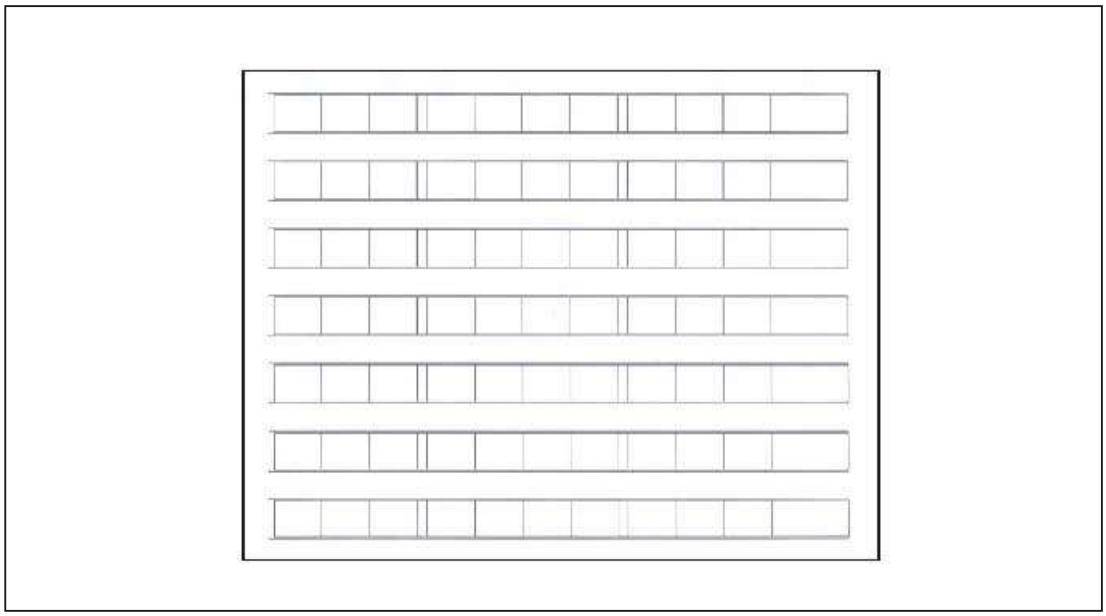

Figure 29-11 Template_MCP310.doc (acc. to labeling plan /template: Item No. A5E00205580)

(C)

Table 29-9 File Symbols.doc

JOG	7001	SPINDLE STOP	7013	FEED STOP	7025	SPINDLE START		7124
REPOS	7002	SPINDLE LEFT	7014	FEED START	7026	+C		7125
REF.POINT	7003	AUTO	7015	RAPID	7027	+X		7126
[VAR]	7004	10	7016	Z	7028	-Y		7127
SPINDLE DEC.	7005	SINGLE BLOCK	7017	4 4TH AXIS	7029	+Z		7128
100%	7006	RESET	7018	5 5TH AXIS	7030	-X		7129
SPINDLE INC.	7007	100	7019	6 6TH AXIS	7031	+Y		7130
MDA	7008	CYCLE STOP	7020	-	7032	-Z		7131
TEACH IN	7009	CYCLE START	7021	+	7033	-C		7132
1	7010	Y	7022	7 7TH AXIS	7120			
X	7011	1000	7023	8 8TH AXIS	7121			
SPINDLE RIGHT	7012	WCS MCS	7024	10000	7123			

Creating labeling strips with the aid of the file: "Template_M_MCP310.doc" (A)

- Open the file **Template_M_MCP310.doc** in the word-processing program MS Word.

To obtain optimum printing results, remove all separating lines in each labeling strip **(2)** above, below and between the symbols.

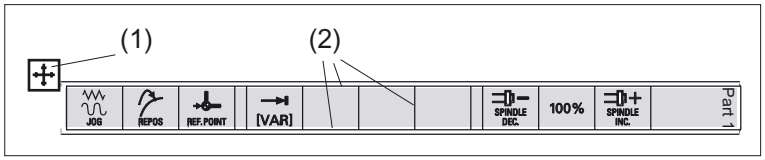

Do **not** highlight the labeling strips using the table symbol **(1)**, but rather:

1. Place the cursor directly before the first symbol on the first labeling strip.
2. Highlight the entire row of the labeling strip by
   - pressing and holding the left mouse key and dragging it to the end of the row or
   - pressing the F8 key and the cursor key "→" until the entire row is selected.
3. Click on the highlighting with the right mouse key.
4. In the menu that appears, select the entry: "Table properties".
5. On the "Table" tab, select the entry: "Borders and shading…".
6. Select the tab "Borders" and click on "Setting:" in the symbol with the designation: "None".
7. Confirm the selection with "OK" and remove the highlighting.
   This removes all separating lines (with the exception of the outer edges) from this row.

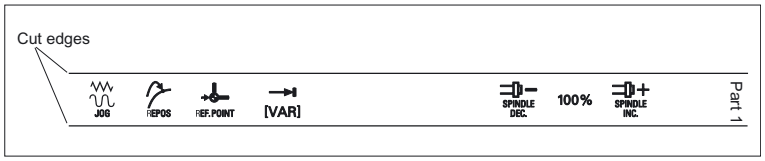

8. Remove the separating lines of the other labeling strips in the same way.
9. Place the blank film in the printing direction in the slot of your laser printer (see figure: "Blank film for MCP 310").
10. Select "film" as the printable medium if your printer allows this setting.
11. Start the printing process using MS Word.

Note

For labeling the labeling strips, HP Color Laser Jet film C2936A is used.
Make a test print on paper before you print on the film.
Allow the film to cool after printing so that the ink can dry.

12. Cut the labeling strips out of the film along the edges.
13. Round off the corners of the labeling strips approx. 1.5 mm to facilitate insertion.

Preparing the labeling strips with the aid of "Template_MCP310.doc" (B)

Inserting symbols with the"Symbols.doc" file (C)

1. Open both the "Template_MCP310.doc" file and the "Symbols.doc" file in MS Word.
2. Copy the desired key symbol from the file "Symbols.doc".
3. Position the cursor in the desired field of the template (B) and add the symbol.
4. If all the desired symbols have been added, remove the separating lines and start the printing process in accordance with the instructions in Section: Preparing the labeling strips with the aid of "Template_M_MCP310.doc".

Inserting characters/text

1. Open the "Template_MCP310.doc" file in MS Word.
2. Set the "Arial" font to format characters.
   (This font is comparable to the "Univers S57" font, used by Siemens for the key labeling.)
3. Position the cursor in the desired table cell and enter characters/text.

Creating your own symbols

- Printing in a vector program (e.g. Designer, Freehand, CorelDraw):
  - Draw a 15 x 15 mm square, fill with the color white and give it an invisible border line.
  - Place the symbol in the center of this square.
  - Copy the entire image (square and symbol) and paste it into the Word document (Template_MCP310.doc).
- Drawing in an image editing program (e.g. Photoshop, Picture Publisher, Paint):
  - Create a square area (e.g. 100 x 100 pixels) filled with the color white.
  - Draw the symbol in the center of this square.
  - Copy the entire image (square and symbol) and paste it into the Word document (Template_MCP310.doc).

Dimension drawings

The figure shows a dimension drawing for the blank template of the MCP 310:

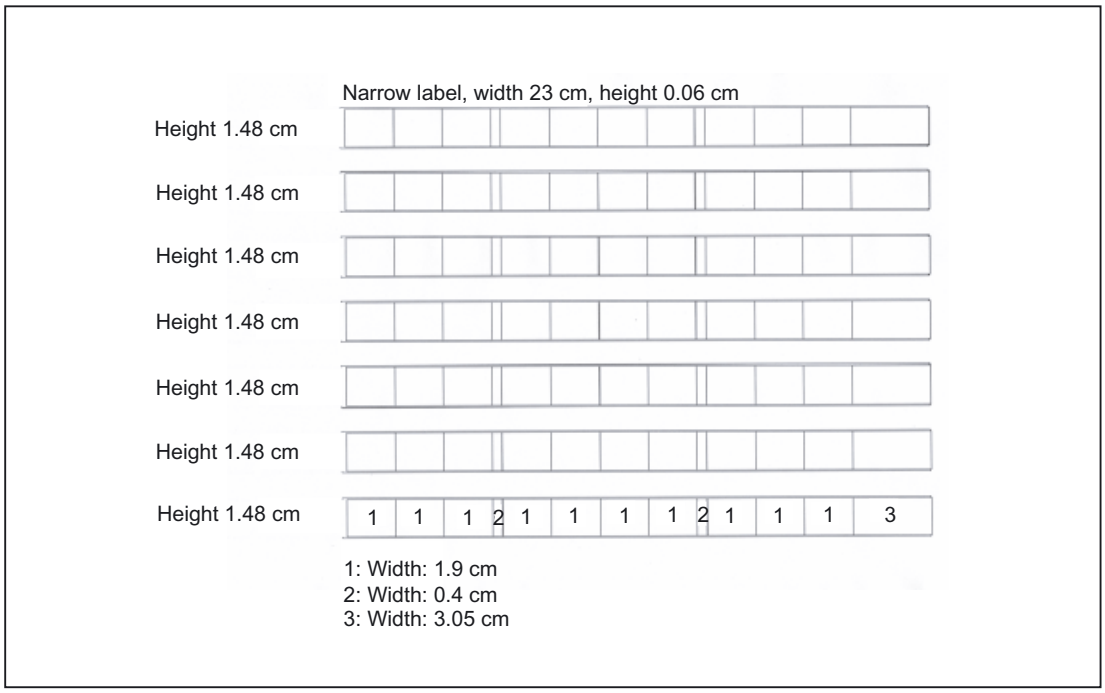

Figure 29-12 Dimension drawing for slide-in labels for MCP 310

29.9.3 Inserting the slide-in label "Part1"

The slide-in label "Part1" (8) is located under the earthing angle (1).

Therefore, first remove the earthing angle before you pull out or insert the slide-in label "Part 1".

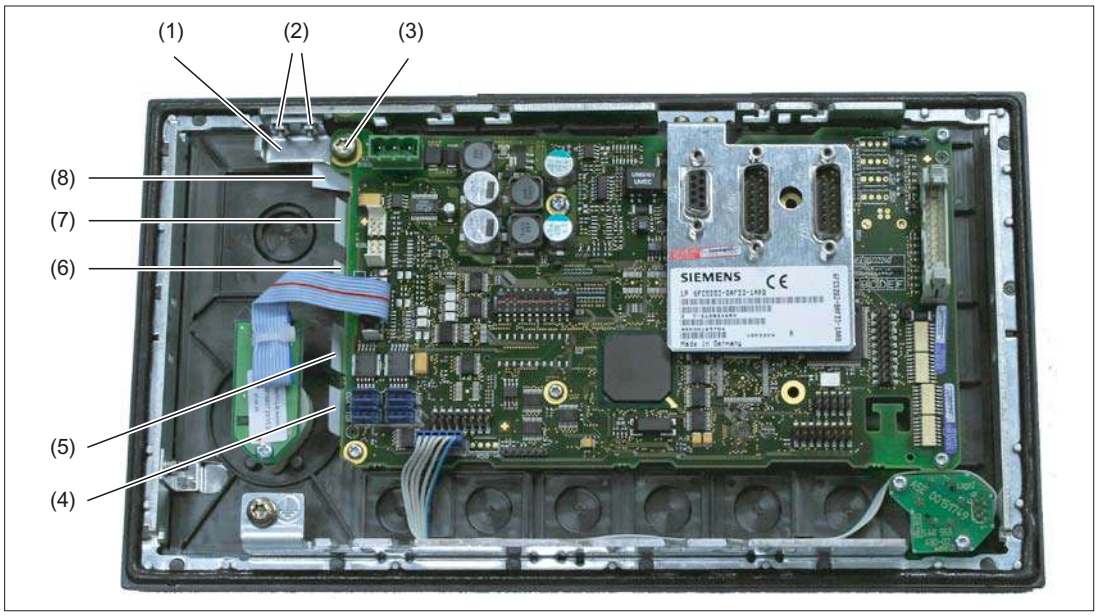

Figure 29-13 MCP 310 - Rear side with slide-in labels

(1) Earthing angle
(2) Fastening screws (M3) for the earthing angle (housing)
(3) Fastening screw (M5) for the earthing angle (COM board)
(4) Slide-in labels "Part5"
(5) Slide-in labels "Part4"
(6) Slide-in labels "Part3"
(7) Slide-in labels "Part2"
(8) Slide-in labels "Part1"

Removing the earthing angle



1. Remove the fastening screw (M5) using a TX 25 screwdriver.



2. Remove the two fastening screws (M3) using a TX 10 screwdriver.

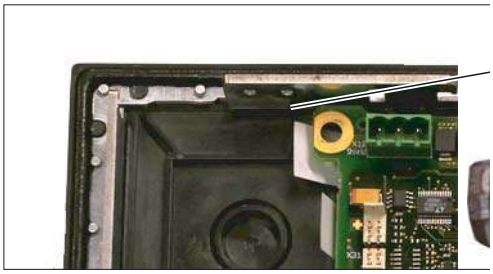

3. Take off the earthing angle.



4. Pull out the slide-in label.

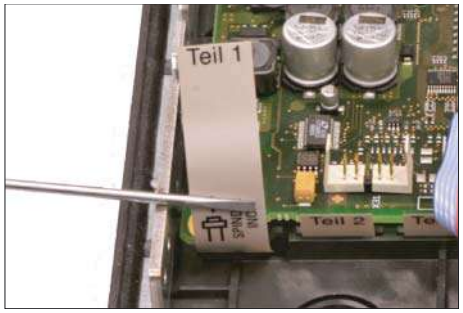

Installing the earthing angle

- Secure the earthing angle after you have inserted the slide-in label by tightening the three fastening screws.

Note

Observe the proper torque values when tightening the screws:

- M3: 0.8 to 1.3 Nm
- M5: 3.0 to 6.0 Nm

Machine control panel: OP 032S

30

30.1 Description

Validity

This description applies to the machine control panel

Type	Order number
OP 032S	6FC5203–0AD10–1AA0

Features

- Key caps (49 pcs., 48 with LED, can all be assembled variably)
- Feed override switch
- Installation possibilities of optional customer keys, emergency stop buttons or second override switch
- 10 free 24 V inputs

  6 free 24 V/250 mA outputs

30.2 Operator controls and indicators

Control elements in delivered status

When supplied, the following control elements are provided on the machine control panel:

- Key caps (49 pcs., 48 with LED, can all be assembled variably)
- Feed override switch

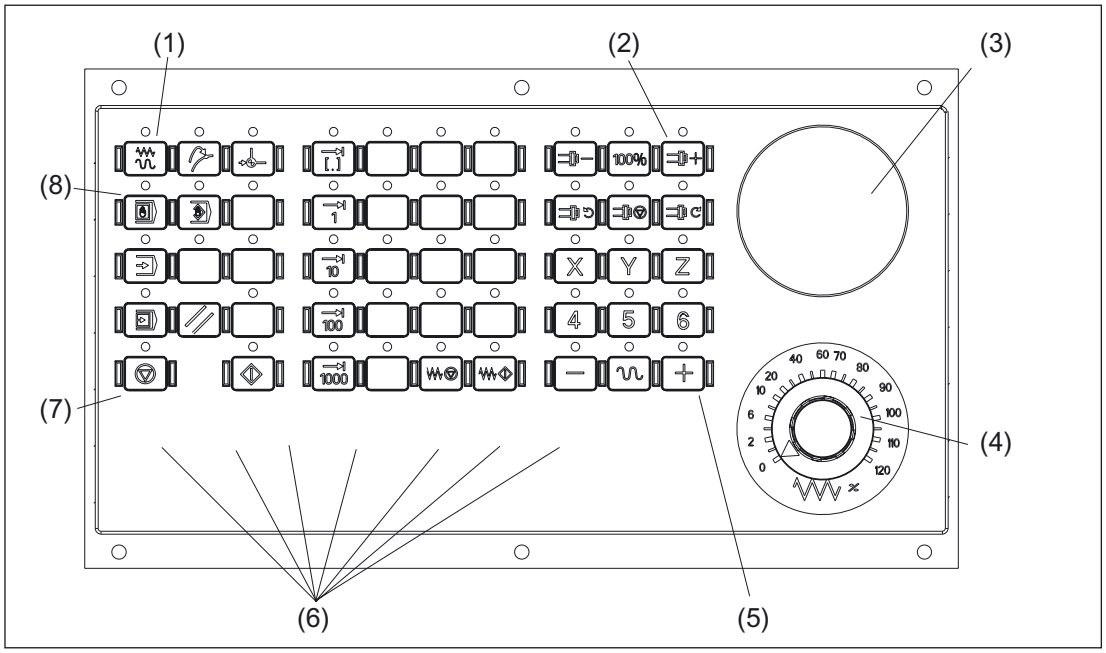

Figure 30-1 Front view of machine control panel, overview and location of control elements

(1) Key 1 / LED 1
(2) Key 10 / LED 10
(3) Depression for washer for supplementing the EMER STOP button or override switch
(4) Feed override switch
(5) Key 50 / LED 50
(6) Control elements for supplementation (6 buttons, 1 keyswitch)
(7) Key 41 / LED 41
(8) Key 11 / LED 11

Making the openings with a drilling tool

The openings for the control elements to be supplemented are imprinted on the rear side of the MCP.
For the horizontal openings, the diameter is 16.2 to 16.4 mm.
For the emergency stop switch opening, the diameter is 22.2 to 22.4 mm.

Recommendation: Drill the openings from the rear as follows:

- Clamp the machine control panel for machining on the rear (use suitable drilling support)
- Switch the chip extractor on or cover the electrical parts to prevent chips from falling on them

  Note

  Before drilling the opening, metal chips must be removed from the drills.

- Use the appropriate drill to drill the desired openings (openings are centered)

Making the cutouts by knocking out

The cutouts should be knocked out only if the control elements used cover the broken edges on the front panel (no sharp broken edges).

30.3 Interfaces

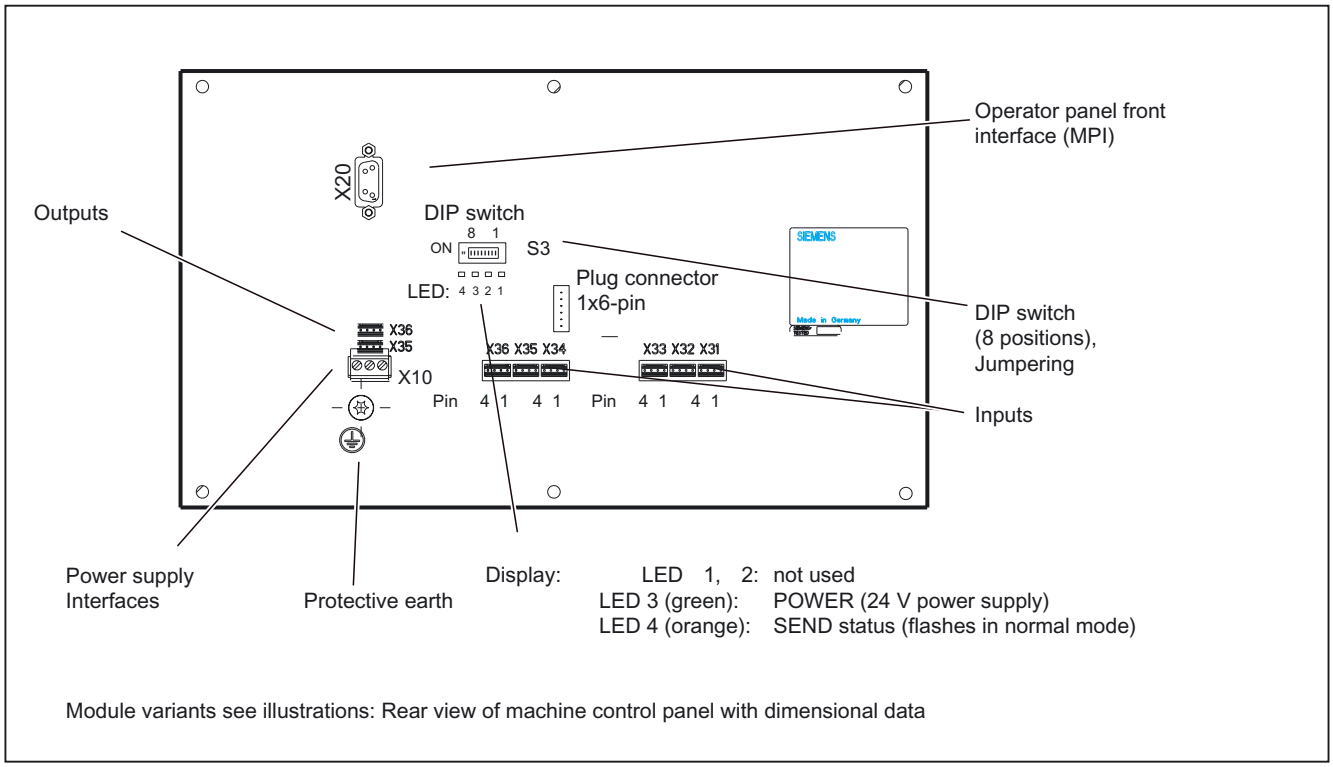

Figure 30-2 Rear view of the machine control panel with overview and location of interfaces

Table 30-1 Example showing connection of additional override switch

Pin	Meaning	Switch/wiring
X31 pin 4	Ground = C	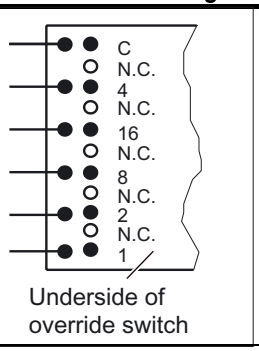
X31 pin 3	Value 22 = 4	
X32 pin 2	Value 24 = 16	
X32 pin 1	Value 23 = 8	
X31 pin 2	Value 21 = 2	
X31 pin 1	Value 20 = 1	

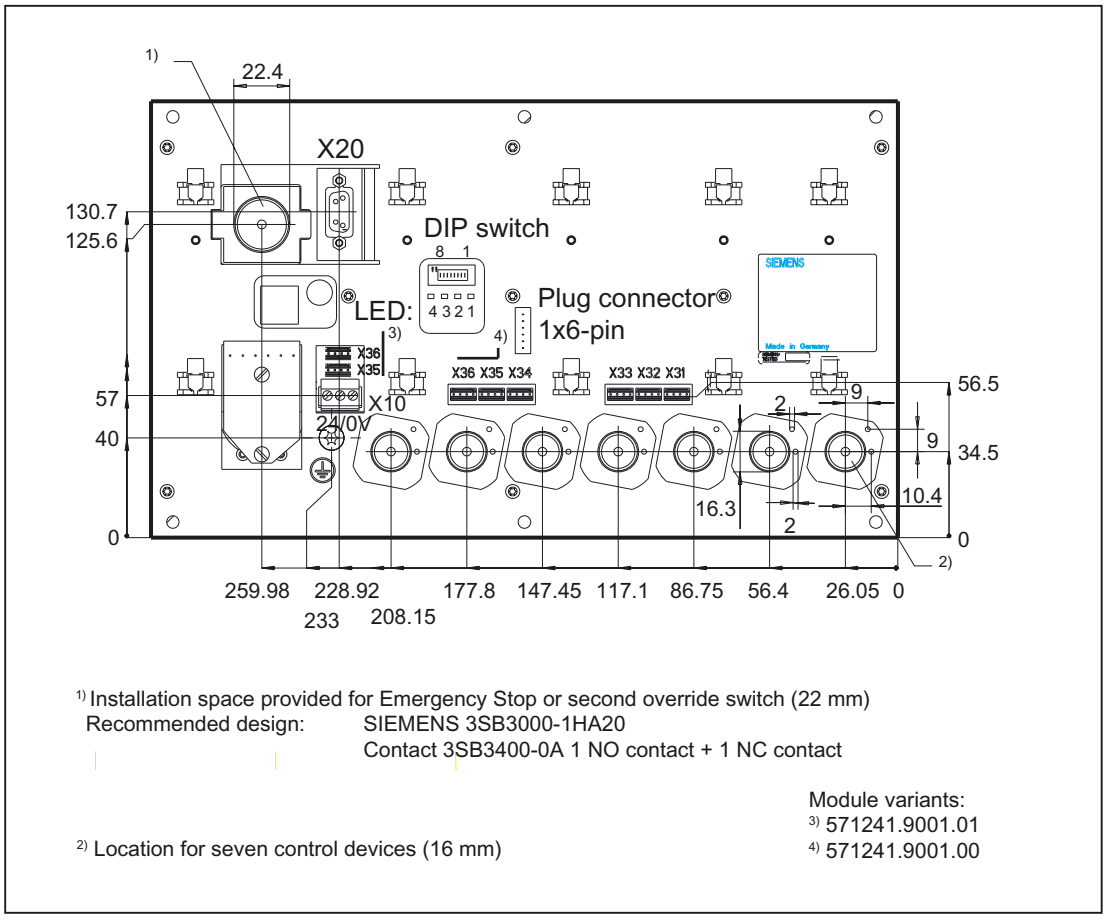

Figure 30-3 Rear view of machine control panel with dimensional data

Power supply interface (X10)

Connector designation:	**X10**
Connector type:	3-pole Phoenix terminal block
Recommended type:	Phoenix CombiCon Order no.: MVSTBR 2.5/3-ST-5.08

Table 30-2 X10 pin assignments

	Pin	Name	Meaning	Type
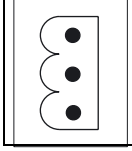	1	P24	24V potential	V (Supply voltage)
	2	M24	Ground 24V	
	3	SHIELD	Shield connection	

Note

The power supply interface should be wired in accordance with the labeling on the module.

OPI interface (X20)

Connector designation:	**X20**
Connector type:	9-pole Sub-D socket connector, straight
Max. cable length	200 m
Special situations:	1.5 Mbaud / 187.5 kBaud data rate

Table 30-3 X20 connector pin assignments

Pin	Signal, name	Signal type
1	Unassigned	–
2	Unassigned	–
3	RS_BTSS, RS485 data	I/O, bi-directional
4	ORTSAS_BTSS, Out Request To Send AS	O, output
5	M5EXT, 5V ground, external	V, supply voltage
6	P5EXT, 5V potential, external	V, supply voltage
7	Unassigned	–
8	XRS_BTSS, RS485 data	I/O, bi-directional
9	IRTSPG_BTSS, In Request To Send PG	I/O, bi-directional

Note

The inputs/outputs implemented via X31 to X36 can be used as desired. The function of the inputs/outputs is determined in the PLC user program.
The following listed inputs/outputs via X31 to X36 and their usage are exemplary.

Jumpering S3

The following settings are possible with this DIP switch (8-way):

Table 30-4 S3 jumpering on machine control panel

8	7	6	5	4	3	2	1	Meaning / value	
							on off	Baud rate 1.5 Mbaud 187.5 kBaud	
					off on off	on off off		cyclical transmit time frame 200 ms 100 ms 50 ms	Receipt monitoring 2400 ms 1200 ms 600 ms
	on off	on	on	on				Bus address 15 14	
	On Off	off						13 12	
	On Off	on	off					11 10	
	On Off	off						9 8	
	On Off	on	on	off				7 6	
	On Off	off						5 4	
	On Off	on	off					3 2	
	On Off	off						1 0	
On Off								Interface MPI customer operator panel Series HW	

Settings for transmission cycle time

The PLC expects a message frame from the MCP at least every 500 ms. The machine control panel sends a message frame to the PLC at cyclic intervals when no key is pressed. This cycle time is set with S3 DIP switches 2 and 3. This enables the load on the PLC resulting from the machine control panel to be adjusted.

Settings for receipt cycle time

The MCP receives message frames from the PLC at cyclic intervals and responds to them at cyclic intervals. The receipt monitoring time is linked to the transmission cycle time of the machine control panel and is set with S3 DIP switches 2 and 3.

Bus address

The bus address must be set to the value 6. Any other setting will be ignored by the software.

Standard setting

The following default settings are suggested:

Table 30-5 Default settings S3

8	7	6	5	4	3	2	1	Meaning	
off	off	on	on	off	on	off	on	Baud rate: Cyclical transmit time frame: Bus address:	1.5 Mbaud 100 ms 6 Series HW

Indicators (LED 1 .... 4)

These LEDs display the following:

LED 1, LED 2:	not used
LED 3	POWER (24 V supply)
LED 4:	TRANSMIT Status change on protocol transmission

Interfaces for optional customer keys (X31, X32, inputs)

Connector designation:	**X31, X32**
Connector type:	4-pole plug connector Connection plug: Berg type Dubox

Table 30-6 X31 and X32 assignments

Pin	Signal, name		Signal type
	X31	X32	
1	KT-IN 0, user key 1	KT-IN 3, user key 4	I, input
2	KT-IN 1, user key 2	KT-IN 4, user key 5	
3	KT-IN 2, user key 3	KT-IN 5, user key 6	
4	M5, ground	M5, ground	
Note: The inputs switch to ground (active low).			

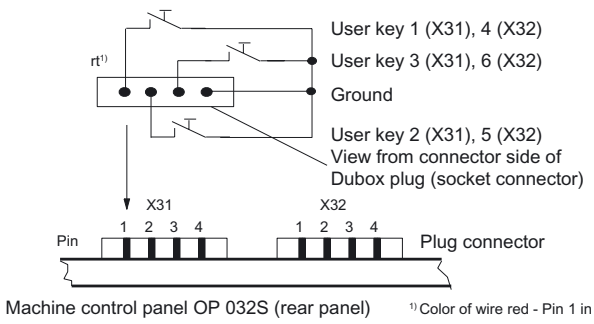

Interfaces for optional keyswitches (X33, X34, inputs)

Connector designation: **X33, X34**
Connector type: 4-pole plug connector
Connection plug: Berg type Dubox

Table 30-7 X33 and X34 assignments

Pin	Signal, name		Signal type
	X33	X34	
1	SS 0, Keyswitch input 0	SS 2, Keyswitch input 2	I, input
2	SS 1, Keyswitch input 1	SS 3, Keyswitch input 3	
3/4	M5, ground	M5, ground	
Note: The inputs switch to ground (active low) Other control elements can also be connected to these inputs.			
	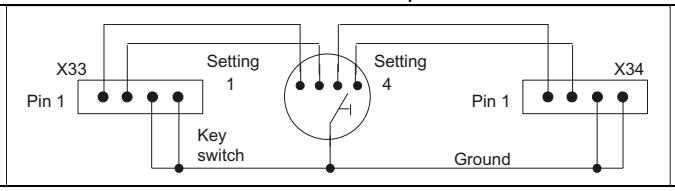		

Interfaces for optional user lamps (X35, X36, outputs)

Connector designation: **X35, X36**
Connector type: 4-pole plug connector
Connection plug: Berg type Dubox

Table 30-8 X35 and X36 assignments

Pin	Signal, name		Signal type
	X35	X36	
1	KT-OUT 0, user lamp 1	KT-OUT 3, user lamp 4	O, output
2	KT-OUT 1, user lamp 2	KT-OUT 4, user lamp 5	
3	KT-OUT 2, user lamp 3	KT-OUT 5, user lamp 6	
4	M24, 24V ground	M24, 24V ground	
Note: The outputs are designed for 24V/250mA.			
	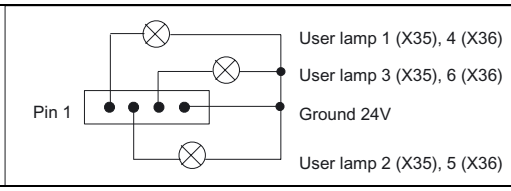		

30.4 Mounting

Dimension drawing

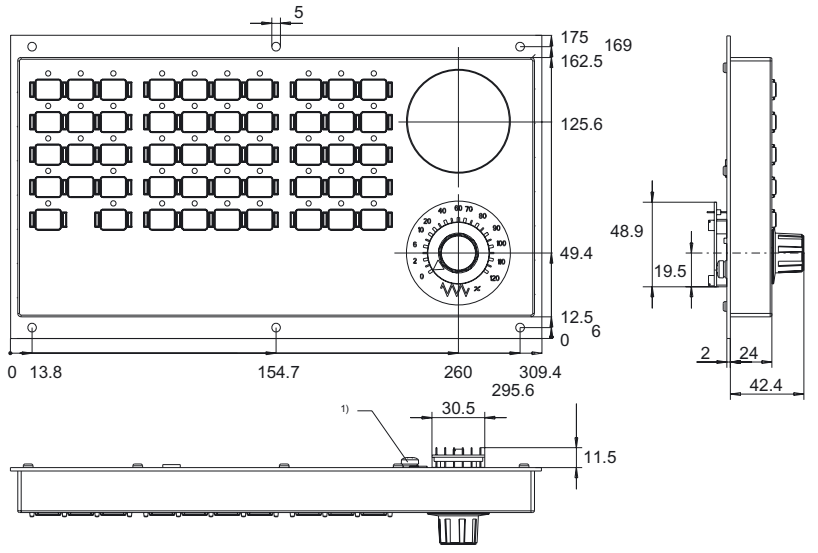

Figure 30-4 Dimension drawing of machine control panel

Panel cutout

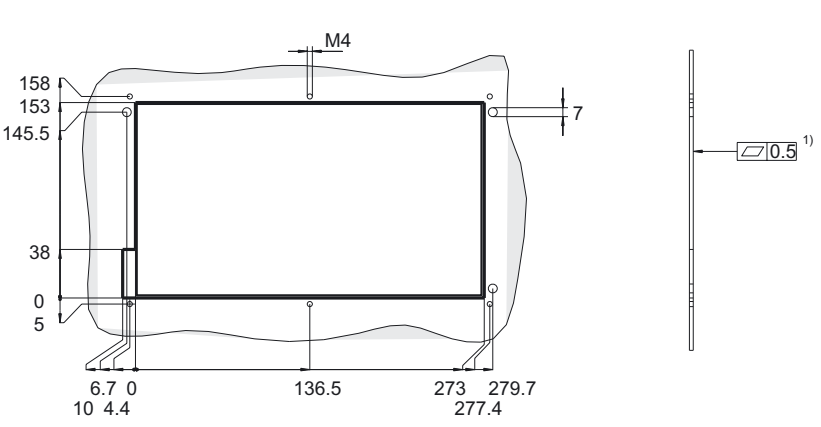

Figure 30-5 Panel cutout of machine control panel

30.5 Technical specifications

Security		
Safety class	III; PELV acc. to EN 50178	
Degree of protection per EN 60529	Front: IP54	Rear side: IP00
Approvals	CE	
Electrical specifications		
Input voltage	DC 24 V	
Power consumption, max.	10.8 W	
Mechanical data		
Dimensions	Width: 310 mm Height: 175 mm	Depth: 56 mm Mounting depth: 12 mm
Weight	Approx. 1.3 kg	
Mechanical ambient conditions	**Operation**	**Transport** (in transport packaging)
Vibratory load	10 -58 Hz: 0.015 mm 58 -200 Hz: 19.6 m/s^2 3M4 per EN 60721-3-3	5 -9 Hz: 3.5 mm 9 -200 Hz: 9.81 m/s^2 2M2 per EN 60721-3-2
Shock stressing	150 m/s^2, 11 ms, 18 shocks 3M2 per EN 60721-3-3	150 m/s^2, 11 ms, 18 shocks 2M2 per EN 60721-3-2
Climatic ambient conditions		
Cooling	By natural convection	
Condensation, spraying water and icing	Not permitted	
Supply air	Without caustic gases, dusts and oils	
	Operation	**Storage/shipping** (in transport packaging)
Applicable standards	EN 60721-3-3	EN 60721-3-1 / -3-2
Climate class	3K5	1K3 / 2K4
Temperature limits	0 ... 45 ºC (at front) 0 ... 55 ºC (at rear)	-25 ... 55 ºC
Temperature change	Max. 10 K/h	Max. 18 K/h
Limits for relative humidity	5 ... 80%	5 ... 95%
Permissible change in the relative air humidity	max. 0.1% /min	

30.6 Accessories

Supplementary control elements

The following control elements can be added:

- **EMERGENCY STOP button**
  - Operator control element **3SB3000-1HA20**
  - Switching element (1 NO contact + 1 NC contact) **3SB3400–0A**
- **Cable set** for additional control devices for interfaces X31-X36
  Max. 6 cables are needed per MCP.
  60, each 500 mm
  Order No. 6FC5247–0AA35–0AA0
- **6 buttons** with lamps + **1 keyswitch**
  The buttons and the keyswitch are connected via X31 – X34 (input signals).
  The lamps are connected to X35 and X36 (output signals).
  Recommended type for the keys and keyswitches:
  Rafix 16, Lumotast 25, Schlegel
  QUARTRON
  Reference sources:
  Schlegel (http://schlegel-ekontakt.de),
  RAFI (http://www.rafi.de)
- **Key cap** (for labeling) **6FC5148–0AA13–0AA0**
  90 ergo-gray items
  20 red items
  20 yellow items
  20 green items
  20 medium gray items
- **Transparent key cap** (with adhesive label) **6FC5148–0AA14–0AA0**
- **Fastening screws** (100 units) **6FC3988–7BJ10**
- **Additional override switch** **6FC5247–0AA34–0AA1**
  Override switch with wing cap, cover, two dials.
  - CBS 1/1x1GG (16/15°) switch
  - Spindle override 50-120% dial
  - Rapid traverse override 0–100% dial.

  The second override switch must be connected via X31-X32.

Machine Pushbutton Panel: MPP 483

31

31.1 Description

31.1.1 Overview

The machine control panel MPP483 permits user-friendly operation of the machine functions on complex machining stations. It is suitable for machine-level operation of milling, turning, grinding and special machines.

In addition to the standard elements of machine control, several freely assignable slots are integrated on the operator panel for connecting other control devices.

The function of the MPP 483 can be extended considerably by fitting additional keys and through the EKS identification system provided by Euchner.

The machine control panel is easy to mount on the rear side using special tension jacks.

All keys have user-inscribed slide-in strips for machine-specific adaptations. Two DIN-A4 sheets (printed and white) for inscribing are supplied by the factory.

The machine control panel MPP 483 is available as standard, in extended standard versions and in special versions.

Validity

The following description applies to the following machine control panels:

Table 31-1 Standard versions

Identifier	Features	Order No.:
MPP 483	Without handheld unit connection	6FC5303-1AF00-0AA1
MPP 483 - EKS	with cut-out for EKS identification system	6FC5303-1AF00-0AE1

Table 31-2 Extended standard versions

Identifier	Features	Order No.:
MPP 483 H	with handheld unit connection HT 6	6FC5303-1AF00-1AA1
MPP 483 HTC	with handheld unit connection HT 8	6FC5303-1AF00-8AA1
MPP 483 HTC-EKS	with handheld connection HT 8 and cut-out for EKS	6FC5303-1AF00-8AE1
MPP 483 A	for mounting applications (without override)	6FC5303-1AF01-0AA1

Table 31-3 Special versions

Identifier	Features	Order No.:
MPP 483 S		
MPP 483 Sxx	Height: 155 mm - with customer specific equipment	6FC5303-1AF02-0__0 1)
MPP 483 H Sxx	Height: 155 mm - with customer-specific complement - with handheld unit connection HT 6	6FC5303-1AF02-1__0 1)
MPP 483 HTC Sxx	Height: 155 mm - with customer-specific complement - with handheld unit connection HT 8	6FC5303-1AF02-8__0 1)
MPP 483 L		
MPP 483 /L Lxx	Height: 244 mm - with customer specific equipment	6FC5303-1AF03-0__0 1)
MPP 483 H/L Lxx	Height: 244 mm - with customer-specific complement - with handheld unit connection HT 6	6FC5303-1AF03-1__0 1)
MPP 483 HTC/L Lxx	Height: 244 mm - with customer-specific complement - with handheld unit connection HT 8	6FC5303-1AF03-8__0 1)

1) You can put together the components for occupancy of the free module locations according to your practical needs. The DOConCD / Catalog NC 61 (accompanying CD) contains a configuring tool and instructions for this purpose.

Connectable controls

- SINUMERIK 840D sl
- SINUMERIK 840D / 840Di
  (as of software version 840D-NCK 7.2)
- SINUMERIK 810D
  (Can only be connected in MPI standard mode.)
- SIMATIC S7-300

31.1.2 System features

Standard for all versions:

- Profibus or MPI/OPI
- Function keyboard with 5 x 5 key matrix, can be freely projected and labeled
- 8 long-stroke keys with LEDs,
- Interfaces for 2 handwheels for connection via PROFIBUS DP (function depends on NCU software)
- Emergency stop button (4-wire), latching, tamper-proof

- Keyswitch with 2 settings - leftward probing setting and rightward probing setting right setting is customer-specific)
- Direction control key connection for OP 012
- 2 free 22.5 mm slots or space for EKS
- Space for override

Supplementary elements for the extended standard and special versions:

- Integration of max. 3 override switches
- Handheld unit connection HGA for HHU / HT 6 or HT 8 (instead of the handheld unit connection, the MPP 483 L can be equipped with 1 extension key.)
- EKS identification system
- Protective shroud for emergency stop button, REES emergency stop
- Emergency stop overridden by 2-position keyswitch (probing position)
- 2 extension keys with LEDs can be variably fitted with contact blocks (on MPP 483)
- 10 extension keys with LEDs can be variably fitted with contact blocks (on MPP 483 L)
- Mushroom-shaped button (SR)
- Authorization lock switch (ALS)
- BA selector switch, 4-positions as key or knob switch

The positions of the individual elements on the machine control panels is shown in section: "Control and display elements" → "Special versions".

System configuration

The figures show the possibilities for integrating the MPP 483 H and the MPP 483 HTC into the control system.

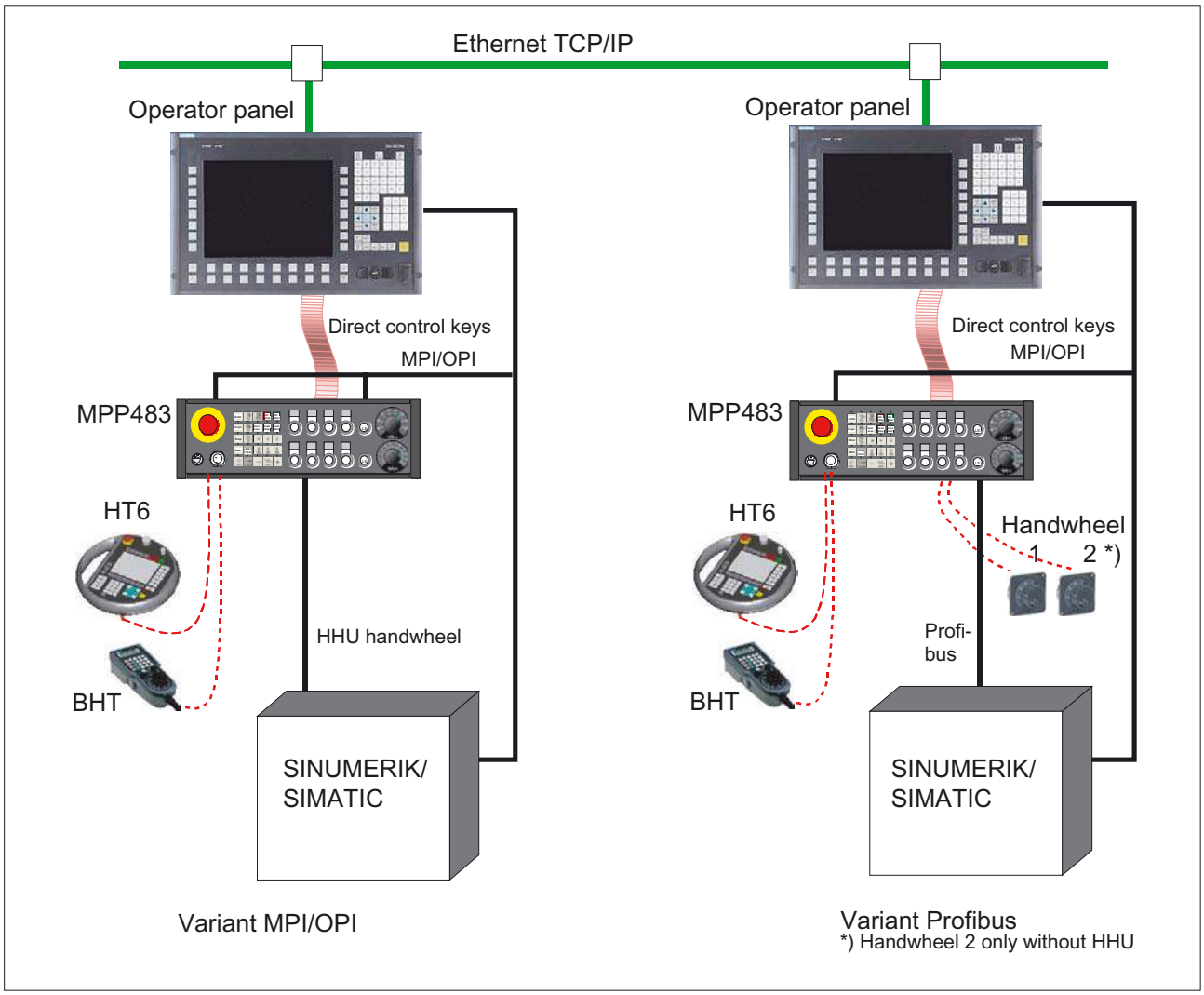

Figure 31-1 System configuration of the MPP 483 H

2 handwheels can be used with the PROFIBUS version.

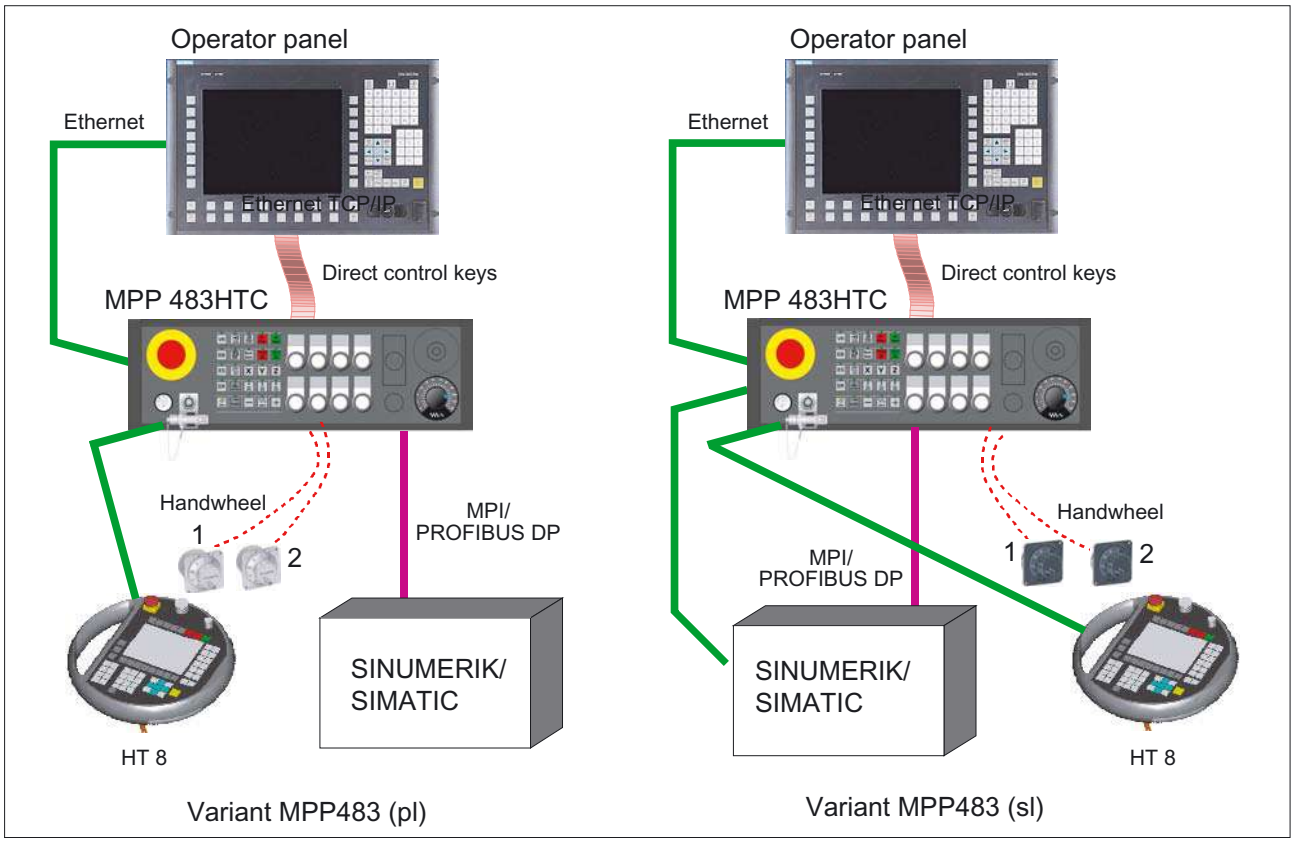

Figure 31-2 System configuration of the MPP 483 HTC

Note

The connection cables are not part of the scope of supply.

31.1.3 Mechanical design

The machine control panel MCP 483 consists of

- Control panel
- flat module with handheld unit connection (option)
- Flat module customer keys
- Flat module COM board

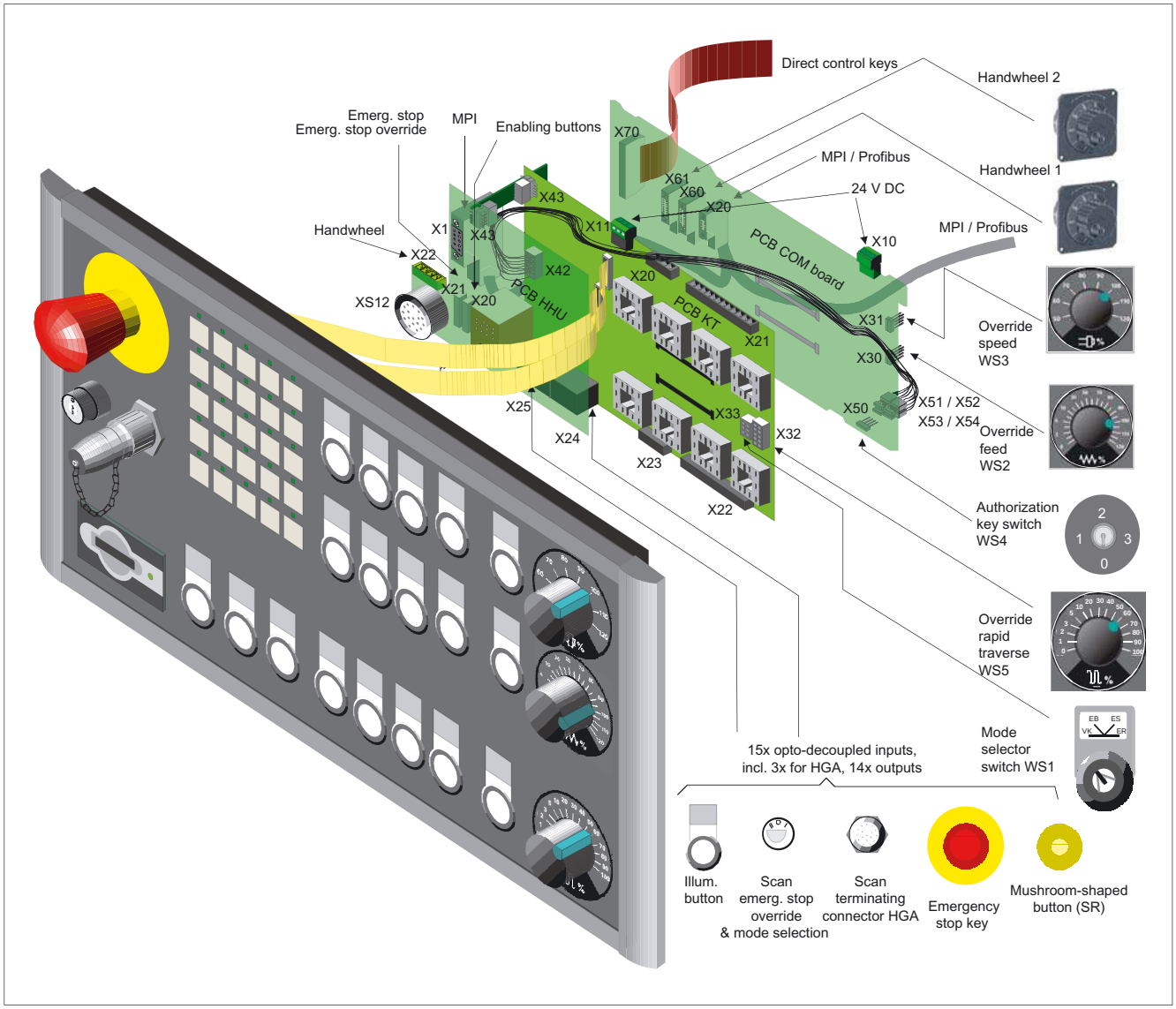

Figure 31-3 Mechanical design taking example of the MPP 483 L

31.2 Operator controls and indicators

31.2.1 Standard versions

Standard versions

The machine control panel is available in the following standard versions:

MPP 483 / MPP 483-EKS

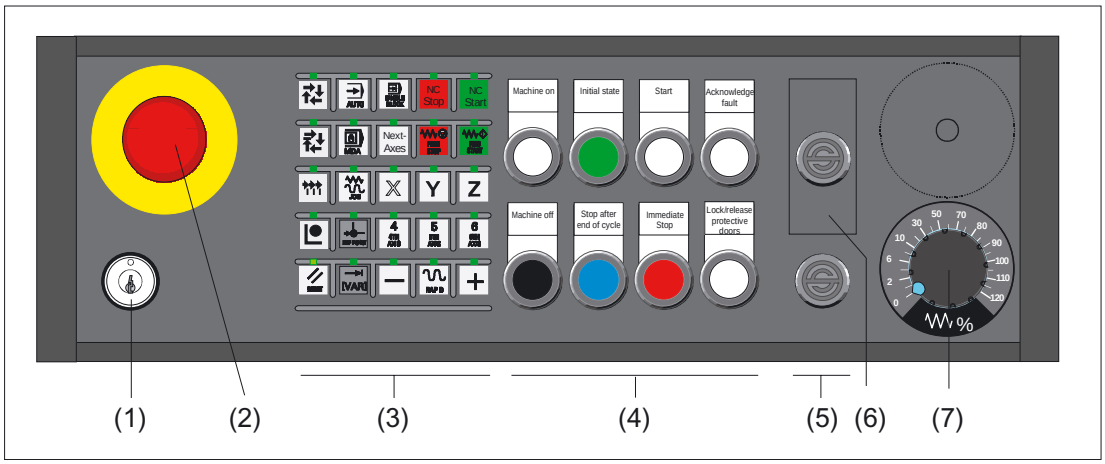

(1) Key switch
(2) Emergency stop button
(3) Soft keys with LED
(4) Customer keys (long-stroke keys)
(5) Dummy element
(6) cut-out for EKS identification system
(7) Feed override

Extended standard versions

The machine control panel is available in the following extended standard versions:

MPP 483 H

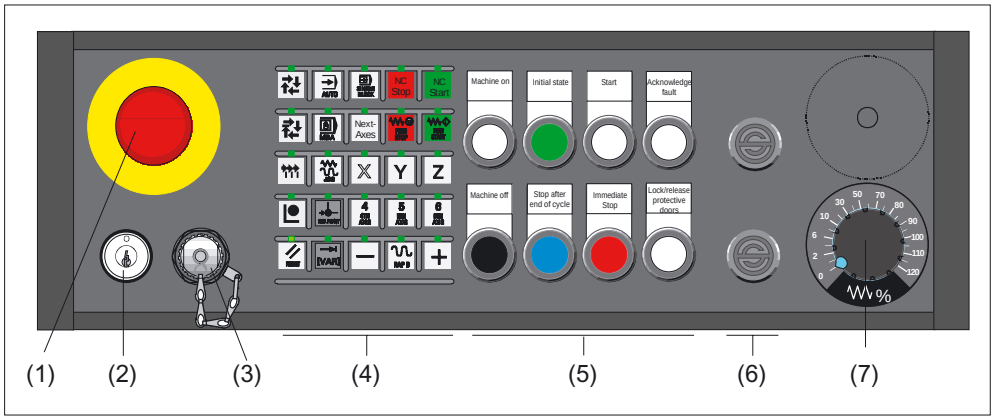

(1) Emergency stop button
(2) Key switch
(3) Handheld unit connection HT 6
(4) Soft keys with LED
(5) Customer keys (long-stroke keys)
(6) Dummy element
(7) Feed override

MPP 483 HTC / MPP 483 HTC-EKS

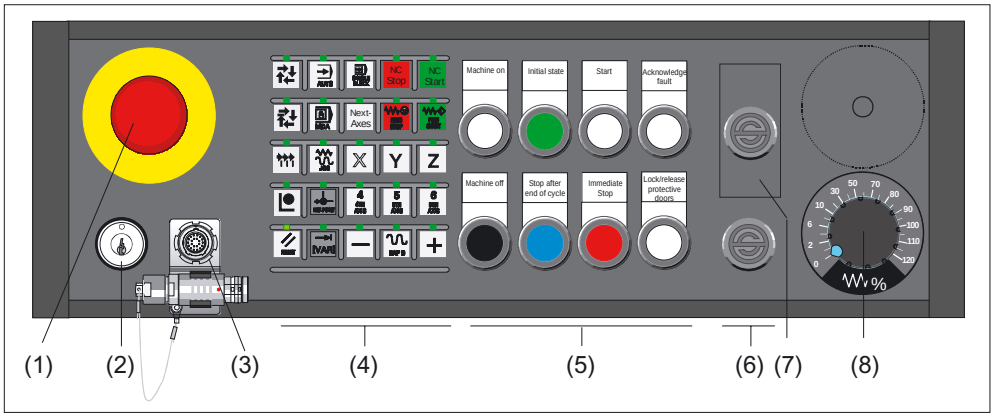

(1) Emergency stop button
(2) Key switch
(3) Handheld unit connection HT 8
(4) Soft keys with LED
(5) Customer keys (long-stroke keys)
(6) Dummy element
(7) cut-out for EKS identification system
(8) Feed override

MPP 483 A

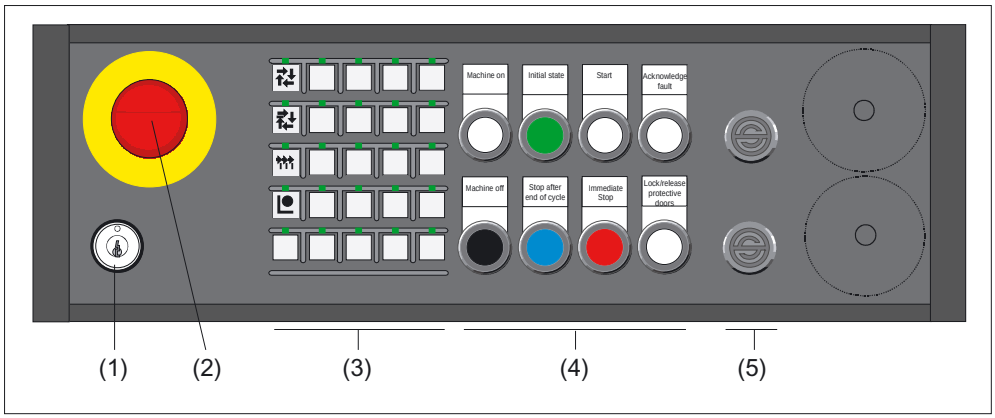

(1) Key switch
(2) Emergency stop button
(3) Soft keys with LED
(4) Customer keys (long-stroke keys)
(5) Dummy element

Note

When using the 8 byte MPI function, only the function keys in the first column can be used (see section: "Interfaces" → "Input / output image" → "Input image of MPI standard").
If you use the WS1 selector switch, you use this to assign these keys.

The free slots can be assigned operator elements which are listed in section: "Operation and display elements" → "Special versions" for the MPP 483 S or MPP 483 L variants.

A description of the individual components can be found in section: "Accessories" → "Retrofit operation elements".

31.2.2 Special versions

The machine control panel is available in the following special versions:
MPP 483 S

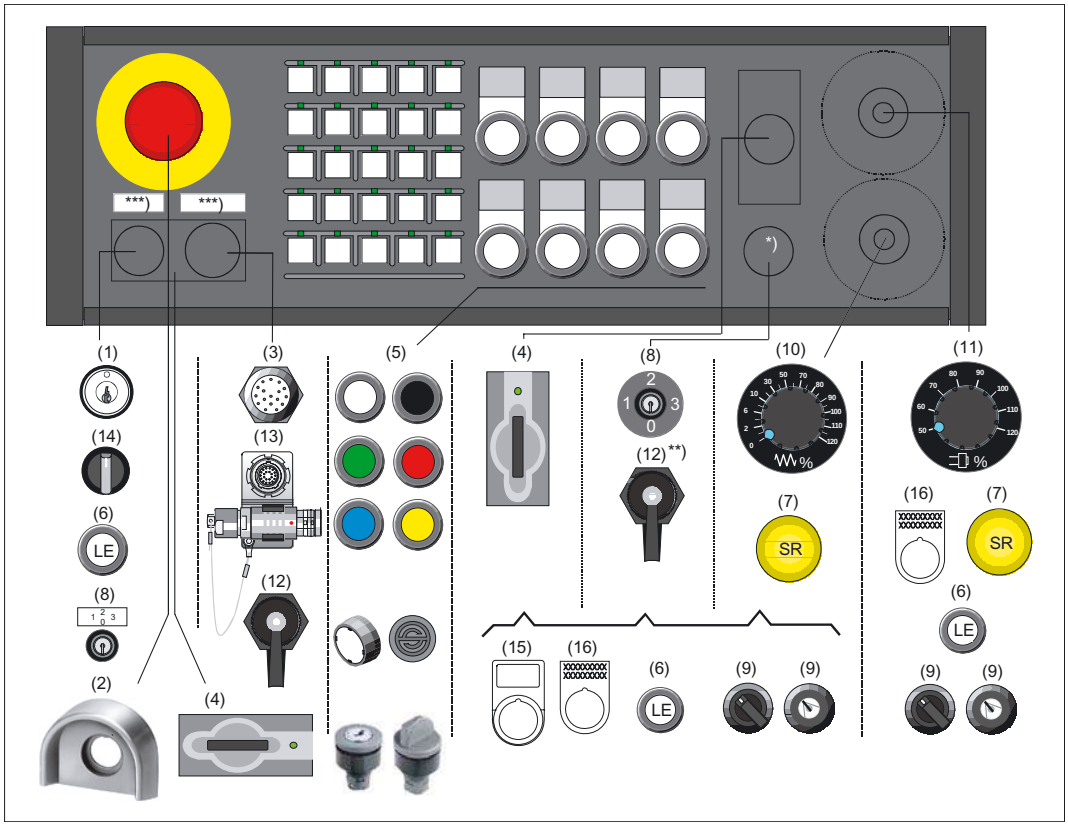

Figure 31-4 Special version MPP 483 S

*) Designation bearing element can only be equipped without EKS (4)
**) Component in this slot needs a new shutter
***) Labeling only for variants without EKS

(1) Key switch
(2) Protective shroud for Emergency stop button
(3) Handheld unit HT 6 [1)]
(4) EKS identification system
(5) Key with LED, actuator [2)]
(6) **L**ong **E**lement, button with LED [2)]
(7) Mushroom-shaped button - rapid withdrawal
(8) Authorization Lock Switch
(9) Mode selector switch
(10) Feedrate override
(11) Spindle / rapid traverse override
(12) RJ 45 bushing
(13) Handheld unit HT 8 [3)]
(14) Knob switch
(15) Tag holder
(16) Adhesive label [4)]

[1)] only in variant MPP 483 H Sxx
[2)] can be assigned according to section: "Accessories" → "Retrofit operation elements"
[3)] only in variant MPP 483 HTC Sxx
[4)] xxxx… - place holder for the number of possible font characters

Note

You can use a configurator to put together the components for occupancy of the free module locations according to your practical needs.
The DOConCD / Catalog NC 60, NC 61 (accompanying CD) contains the following files for this purpose:
- KonfigMPP483.zip (configuration tool)
- AnleitungKonfigurator_MPP483.pdf

MPP 483 L

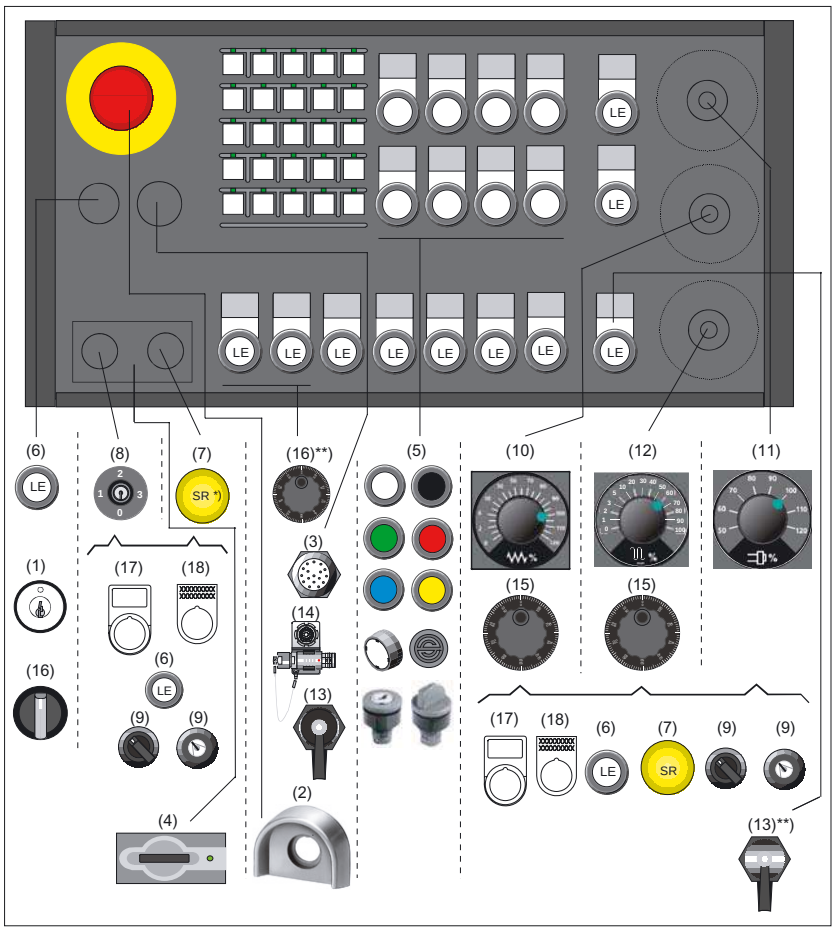

Figure 31-5 Special version MPP 483 L

*) Mushroom-shaped button can only be used if the adjacent spot is not occupied

**) Component in this slot needs a new shutter

(1) Key switch
(2) Protective shroud for Emergency stop button
(3) Handheld unit HT 6 [1)]
(4) EKS identification system
(5) Key with LED, actuator [2)]
(6) **L**ong **E**lement, button with LED [2)]
(7) Mushroom-shaped button - rapid withdrawal
(8) Authorization Lock Switch
(9) Mode selector switch
(10) Feedrate override
(11) Spindle / rapid traverse override
(12) Rapid traverse override
(13) RJ45 bushing
(14) Handheld unit HT 8 [3)]
(15) Handwheel
(16) Knob switch
(17) Tag holder
(18) Adhesive label [4)]

[1)] only in variant MPP 483 H/L Lxx

[2)] can be assigned according to section: "Accessories" → "Retrofit operation elements"

[3)] only in variant MPP 483 HTC/L Lxx

[4)] xxxx… - place holder for the number of possible font characters

Note

You can use a configurator to put together the components for occupancy of the free module locations according to your practical needs.
The DOConCD / Catalog NC 60, NC 61 (accompanying CD) contains the following files for this purpose:
- KonfigMPP483.zip (configuration tool)
- AnleitungKonfigurator_MPP483.pdf

31.2.3 Examples of assignment of free slots

MPP 483 H / MPP 483 A / MPP 483 S

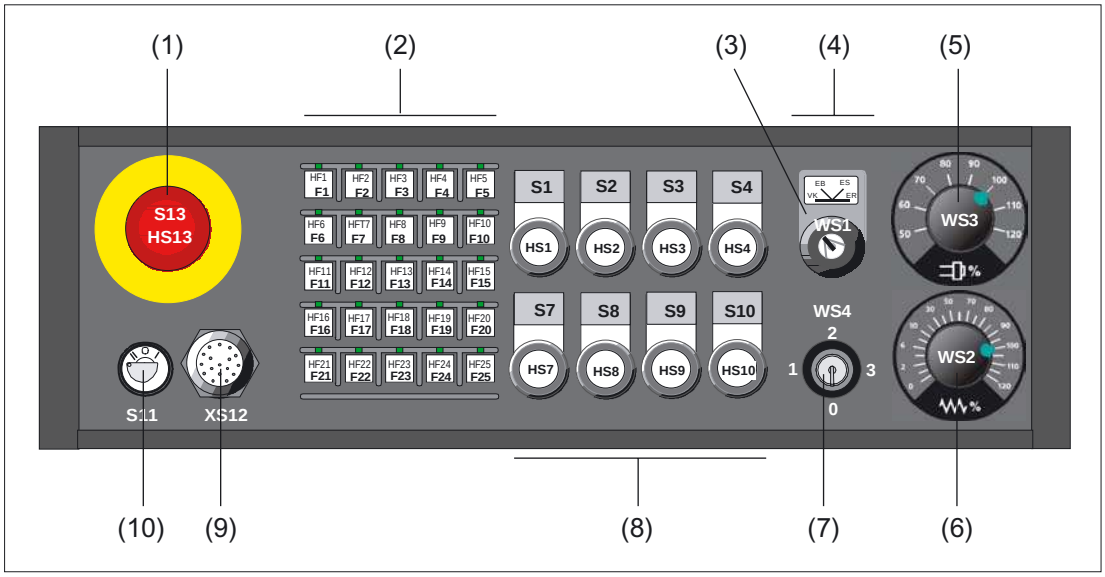

Figure 31-6 Example of MPP 483 H/A/S

(1) Emergency stop button
(2) Function keys
(3) Mode selector switch
(4) EKS identification system or 2 extension elements 22.5 mm
(5) Spindle / rapid traverse override
(6) Feedrate override
(7) Authorization Lock Switch
(8) Customer keys (long-stroke keys)
(9) Handheld unit connection or EKS identification system
(10) Key switch

MPP 483 H - EKS / MPP 483 L - EKS

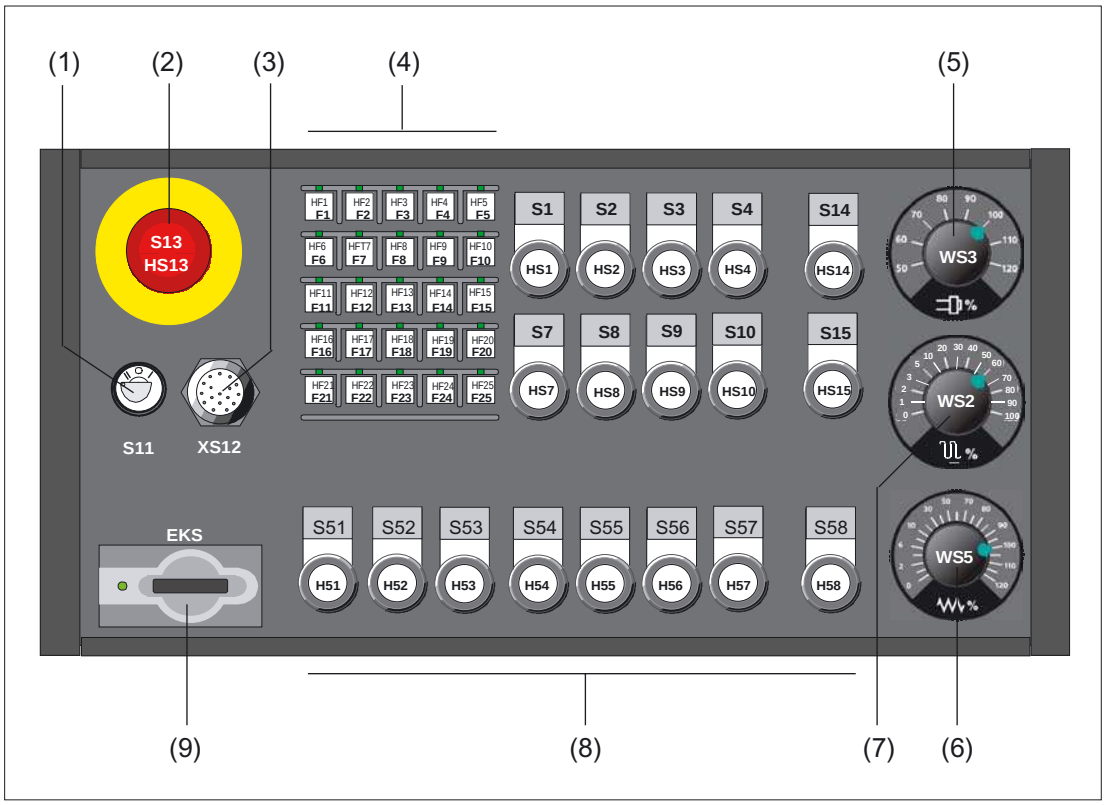

Figure 31-7 Example of MPP 483 H/L-EKS

(1) Key switch
(2) Emergency stop button
(3) Connection for handheld units
(4) Function keys
(5) Spindle / rapid traverse override
(6) Rapid traverse override
(7) Feedrate override
(8) Extension keys
(9) EKS identification system or 2 extension elements 22.5 mm

31.2.4 Description

31.2.4.1 Device front

Connectable control elements

Inputs for

- 25 function keys
- 18 long-stroke keys (max.)
- 3 rotary selector switches
- Keyswitch with four positions

Outputs for

- 47 LEDs (14 led to plug connector)

Emergency stop chain

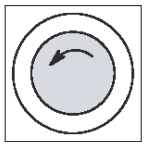

Emergency stop button
Press the red button in emergencies when

- people are at risk,
- there is the danger of a machine or workpiece being damaged.

An emergency stop generally shuts down all drives with the greatest possible braking torque in a controlled manner.

Turn the EMERGENCY STOP button counterclockwise to unlatch it.

When the emergency stop button is activated, the emergency stop chain of the MPP 483 will ensure personal safety and protect the machine in hazardous situations.

The emergency stop chain is also active if the handheld units are removed.
To prevent the emergency stop chain from being interrupted while you plug in or pull out the handheld unit, press the override selector switch S11. This overrides the emergency stop button on the handheld unit.

⚠DANGER

To effectively deal with a malfunction of the S11 override selector switch (e.g. jamming), the user PLC program must generate an emergency stop when a monitoring time (approximately 5 min) expires (see figure in Section: "Connections" → "Connection for handheld units").

The emergency stop chain of the MPP 483 should be integrated in the system emergency stop by the user.



Machine manufacturer
For other reactions to the EMERGENCY STOP:
refer to the machine tool manufacturer's instructions!

Actuation elements

Actuation elements S1 to S4, S7 to S10, S14 and S15 are activated by the control. They also have electrically isolated contacts (common roots) for user-specific wiring.

The following spaces can be connected to control devices corresponding to the table in section: "Accessories" → "Retrofit operation elements":

- S1 to S4
- S7 to S10
- S14
- S15
- S51 to S58

Lamps

Lamps HS1 to HS4, HS7 to HS10, HS14 and HS15 are connected to the control by MPI/OPI. Alternatively, they can also be activated by externally linked potential.

WS1 selector switch

- 2-way, 4 stages, 60° switching angle
- Centrally mounted with front ring
- Designed as keyswitch CG4-1A251-600 *FS1 V750D/2J
  Can be changed by customer as knob switch variant FS1
- Key can be removed in all positions

Note

When used as a mode selector switch, the keyswitch should be used according to Guideline 89/392/EEC.

When the WS1 mode selector switch and MPI standard input image (8 bytes) are used, function keys F1, F6, F11 and F16 have no effect. The function keys cannot be used in such cases.

31.2.4.2 Device rear side

COM board

S1 (jumper)	Setting the handwheel signal type	
	S1 open:	TTL interface
	S1 closed:	differential interface
S3 (coding switches)	Baud rate, address and protocol setting	
Diagnostics LEDs	LED1 (H1)	Hardware test underway. If errors are found, the LED lights up red.
	LED2 (H2)	not used
	LED3 (H3)	Voltage monitoring responded.
	LED4 (H4)	During data transfer via the operator panel interfaces, the LED flashes yellow.
	LED5 (H5)	LED for PROFIBUS DP

Customer key board

Diagnostics LEDs	LED1 (H1)	Voltage monitoring of customer keys
	LED2 (H2)	Voltage monitoring of customer keys
	LED3 (H3)	Voltage monitoring of customer keys

HGA board HT 6

The arrangement of the LEDs on the HGA board HT 6 is shown in the figure: "Rear side of MPP 483H with interfaces" in section: "Interfaces" → "Overview".

Diagnostics LEDs	LED1 (H1)	Bus request Repeater Segment 2
	LED2 (H2)	Bus request Repeater Segment 1
	LED3 (H3)	Voltage of repeater segment 1 (>4.7V)
	LED4 (H4)	Voltage of repeater segment 2 (>4.7V)

HGA board HT 8

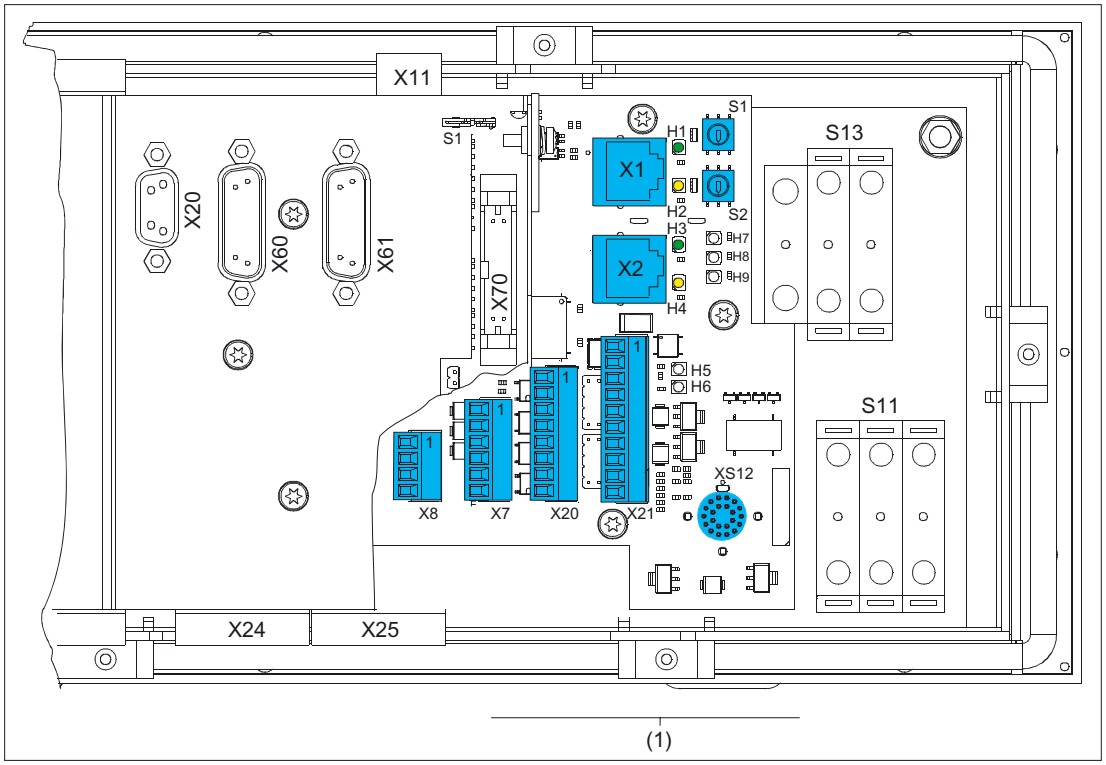

Figure 31-8 Rear MPP 483HTC with LEDs on HGA board HT 8 (1)

Diagnostics LEDs

		Color	for	Meaning
LED1 (H1)	LNK	Green	X1 RJ45	Connection established
LED2 (H2)	ACT	yellow	X1 RJ45	Transmission active
LED3 (H3)	LNK	Green	X2 RJ45	Connection established
LED4 (H4)	ACT	yellow	X2 RJ45	Transmission active
LED5 (H5)	LNK	Green	HT 8 transmission	
LED6 (H6)	ACT	yellow	HT 8 transmission	
LED7 (H7)	Power OK	Green		
LED8 (H8)	FAULT STAT1	Red		Fault
LED9 (H9)	FAULT STAT2	Red		Fault

S1 (coding switches) Module address bit 4 … 7
S2 (coding switches) Module address bit 0 … 3

31.3 Interfaces

31.3.1 Overview

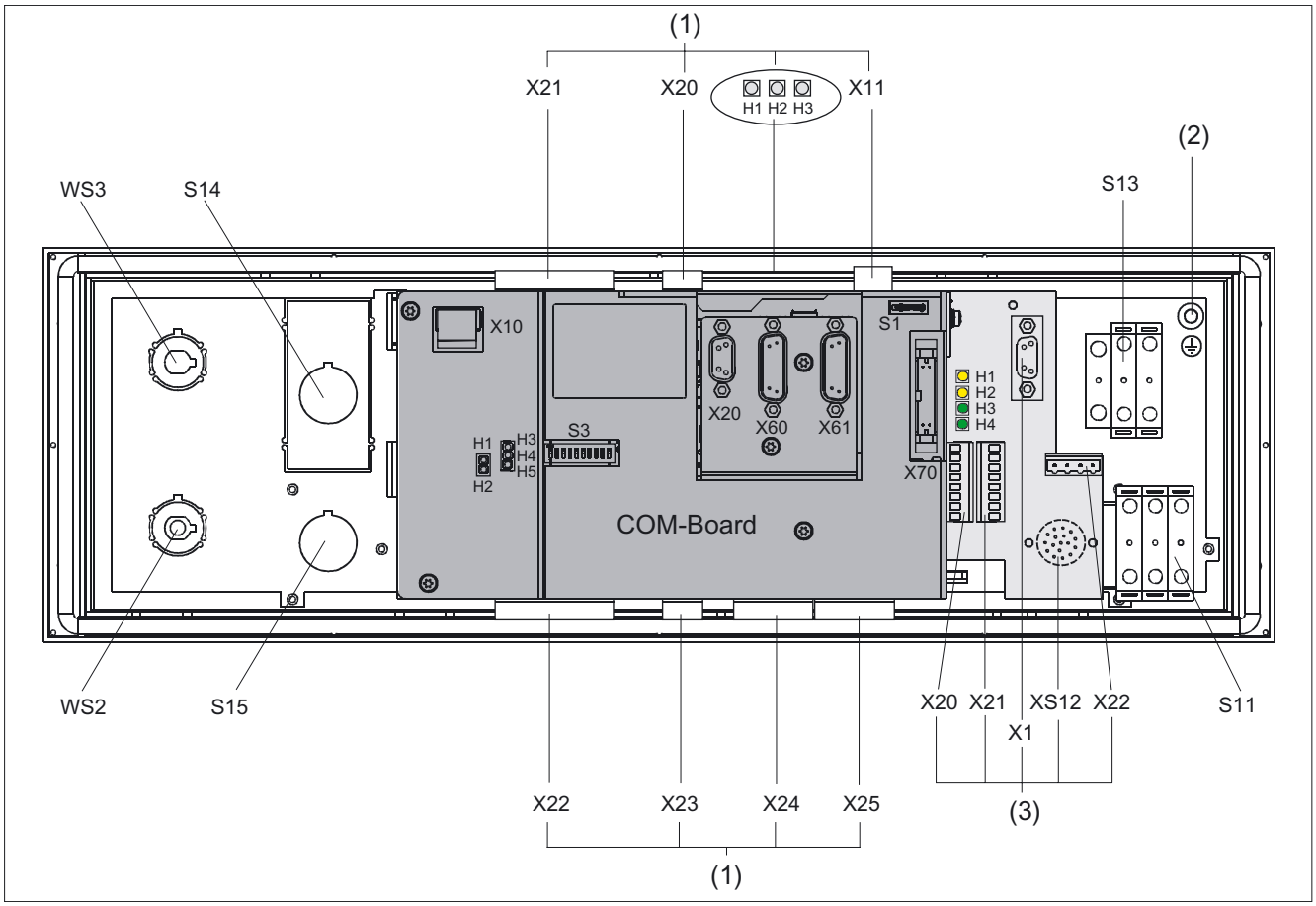

Figure 31-9 Rear side of MPP 483H with interfaces

	Control panel	
(2)		Protective Ground Connection
	S13	Emergency stop button
	S11	Emergency stop override
	COM board	
	X10	Voltage supply
	X20	PROFIBUS DP/MPI
	X60	Handwheel 1
	X61	Handwheel 2
	X70	Interface for direct control keys

(1)	**Customer keys**		
	X11	Voltage supply	
	X20	Connector X20	Individual wiring
	X21	Connector X21	
	X22	Connector X22	
	X23	Connector X23	
	X24	Connector X24	Expansion
	X25	Connector X25	
(3)	**Connection for handheld units**		
	X1	MPI/OPI	
	X20	Enable	
	X21	Emergency stop override	
	X22	Handwheel	
	XS12	Connection for handheld units	

Signal type

O	Outputs
I	Inputs
B	Bi-directional signals
V	Supply voltage
VI	Voltage input
VO	Voltage output

31.3.2 Description

31.3.2.1 Control panel

Protective Ground Connection

Pin	Signal	Connection	Connection cross-section
	PE	M5 x 2.5 cable lug	2.5 mm^2

Emergency stop button S13

Key designation: S13
Key type: Mushroom, push-pull key 3SB3000-1HA20 with holder 3SB3901-0AB and
1 x NO 3SB3400-0B (internal use)

Table 31-4 Switching element for NC

Pin	Signal	Type	Signal name	Function
11	OE_S13.11	I/O	NC contact Ö1, S13	
12	BZ_S13.12		Reference potential Ö1, S13	
21	OE_S13.21		NC contact Ö2, S13	
22	BZ_S13.22		Reference potential Ö2, S13	

Emergency Stop override S11

Key designation: S11
Key type: left probing, right probing, safety lock with actuation element acc. to catalog: Switching devices and systems (NSK) at A&D CD
carrier 3SB3901-0AC with pressure pieces
1 x NO contact 3SB3400-0B
2 x 3SB3400-0A switching element 1Ö/1S elements positive-action

Table 31-5 Emergency stop override

Pin	Signal	Type	Signal name	Function
14	BZ_S11.14	I/O	Reference potential S1, S11	
13	S_S11.13		NO contact S1, S11	
21	OE_S11.21		NC contact Ö2, S11	
22	BZ_S11.22		Reference potential Ö2, S11	
24	BZ_S11.24		Reference potential S2, S11	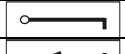
23	S_S11.23		NO contact S2, S11	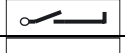
31	OE_S11.31		NC contact Ö3, S11	
32	BZ_S11.32		Reference potential Ö3, S11	
34	BZ_S11.34		Reference potential S3, S11	
33	S_S11.33		NO contact S3, S11	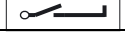

WS1 selector switch

Switch designation: WS1
Switch type: CG4-1 A251-600 *FS1 V750 D/2J

Table 31-6 WS1 selector switch

Pin	Signal	Type	Signal name	Switch setting
11	ER	I/O	Mode	4
15	ES		Mode	3
10	BZ_WS		Reference signal	
13	EB		Mode	2
9	VK		Mode	1

Rapid withdrawal (SR)

Key designation: SR
Key type: 3SB3000-1GA31
Switching element: NO contact 3SB3400-0B, input PLC

Table 31-7 Rapid withdrawal (SR)

Pin	Signal	Type	Signal name	Function
14	BZ_SR.14	I/O	Reference potential S1, SR	
13	S_SR.13		NO contact S1, SR	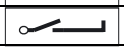

31.3.2.2 COM board

X10 power supply

Connector designation:	X10
Type:	3-pin Phoenix terminal block
Cable length (max.):	10 m

Table 31-8 Interface power supply

Pin	Signal name	Type	Meaning
1	1P24	V	24V potential
2	M24		Ground 24V
3	Shield		Shield connection

PROFIBUS DP / MPI interface X20

Connector designation:	X20
Type:	9-pin sub-D Socket
Cable length (max.):	100 m at 12 Mbaud

Table 31-9 PROFIBUS DP/MPI interface

Pin	Signal name	Type	Meaning
1	N.C.	-	not used
2	N.C.	-	not used
3	RS_DP	B	RS485 differential signal
4	RTS_DP	O	Request To Send
5	M5EXT	VO	5 V external ground
6	P5EXT	VO	5 V external potential
7	N.C.	-	not used
8	XRS_DP	B	RS485 differential signal
9	N.C.	-	not used

Handwheel 1: X60

Connector designation:	X60
Type:	15-pin D-sub female connector

Table 31-10 Interface for handwheel 1:

Pin	Signal name	Type	Meaning
1	P5V	V	Supply voltage 5V
2	M		Chassis ground
3	HW1_A	I	Handwheel pulse track A
4	HW1_XA		Handwheel pulse track A (negated)
5	N.C.	-	not used
6	HW1_B	I	Handwheel pulse track B
7	HW1_XB		Handwheel pulse track B (negated)
8	N.C.	-	not used
9	P5V	V	Supply voltage 5V
10	N.C.	-	not used
11	M	V	Chassis ground
12	N.C.	-	not used
13	N.C.	-	not used
14	N.C.	-	not used
15	N.C.	-	not used

Note

Handwheels can only be connected up to the PROIFIBUS DP variant.

They can either be operated with TTL or differential signals.
You set the signal type using S1 (wire bridge) on the COM board.

Cable length (max.) for handwheels: 5 m

The handwheels are supplied with 5 V ± 5% and 100 mA via the interface.

Handwheel 2: X61

Connector designation:	X61
Type:	15-pin D-sub female connector

Table 31-11 Interface for handwheel 2:

Pin	Signal name	Type	Meaning
1	P5V	V	Supply voltage 5V
2	M		Chassis ground
3	HW2_A	I	Handwheel pulse track A
4	HW2_XA		Handwheel pulse track A (negated)
5	N.C.	-	not used
6	HW2_B	I	Handwheel pulse track B
7	HW2_XB		Handwheel pulse track B (negated)
8	N.C.	-	not used
9	P5V	V	Supply voltage 5V
10	N.C.	-	not used
11	M	V	Chassis ground
12	N.C.	-	not used
13	N.C.	-	not used
14	N.C.	-	not used
15	N.C.	-	not used

Direct control key interface X70

The interface is used to connect the direct control keys of the operator panel front OP 012 by means of a 20-pin ribbon cable (< 0.6 m).

16 digital inputs (5V) can be interrogated by the X70 connector.

Connector designation:	X70
Type:	2 x 10-pin male connector, 2.54 mm grid

Table 31-12 Interface for direct control keys

Pin	Signal name	Type	Meaning
1	DT 1	I	Direct key 1
2	DT 2		Direct key 2
3	DT 3		Direct key 3
4	DT 4		Direct key 4
5	DT 5	I	Direct key 5
6	DT 6		Direct key 6
7	DT 7		Direct key 7
8	DT 8		Direct key 8
9	DT 9	I	Direct key 9
10	DT 10		Direct key 10
11	DT 11		Direct key 11
12	DT 12		Direct key 12
13	DT 13	I	Direct key 13
14	DT 14		Direct key 14
15	DT 15		Direct key 15
16	DT 16		Direct key 16
17	P5V_TACO	V	P5 keyboard controller
18	P5V_TACO		P5 keyboard controller
19	M_TACO	V	M keyboard controller
20	M_TACO		M keyboard controller

Table 31-13 Electrical properties:

Input voltage:	HIGH level: 5V or open LOW level <= 0.8 V

31.3.2.3 User keys

Power supply interface X11

Connector designation:	X11
Type:	Combicon MSTBA2.5/3-G-5.08
Cable length (max.):	10 m

Table 31-14 Interface power supply

Pin	Signal name	Type	Meaning
1	2P24	V	24V potential
2	M24		Ground 24V
3	N.C.		not used

Individual wiring

Connector X20

Connector designation:	X20
Type:	Mini-Combicon MC 1.5/4-G-3.81
Cable length (max.):	30 m

Connector X21

Connector designation:	X21
Type:	Mini-Combicon MC 1.5/12-G-3.81
Cable length (max.):	30 m

Table 31-15 Connector X20 / X21

Connector	Pin	Signal	Type	Signal name	Function
X20	1	OE_S2	I/O	NC contact S2	
	2	OE_S1		NC contact S1	
X21	1	OE_S4	I/O	NC contact S4	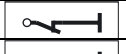
	2	OE_S3		NC contact S3	
X20	3	BZOE_S1-4	I/O	Reference potential NC contact S1 ... S4	
	4	BZS_S1-S6		Reference potential NO contact S1 … S6	
X21	3	S_S4	I/O	NO contact S4	
	4	S_S3		NO contact S3	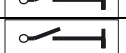
	5	S_S2		NO contact S2	
	6	S_S1.1		NO contact S1.1	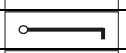
	7	BZS_S1.2		Reference potential NO contact S1.2	
	8	S_S1.2		NO contact S1.2	
	9	HS 4	I	Signaling lamp S4	All inputs "High" active
	10	HS 3		Signaling lamp S3	
	11	HS 2		Signaling lamp S2	
	12	HS 1		Signaling lamp S1	

Connector X22

Connector designation:	X22
Type:	Mini-Combicon MC 1.5/12-G-3.81
Cable length (max.):	30 m

Table 31-16 Connector X22

Pin	Signal	Type	Signal name	Function
1	OE_S7	I/O	NC contact S7	
2	OE_S8		NC contact S8	
3	OE_S9		NC contact S9	
4	OE_S10		NC contact S10	
10	BZOE_S7-S10		Reference potential NC contacts S7-10	
5	S_S7	I/O	NO contact S7	
6	S_S8		NO contact S8	
7	S_S9		NO contact S9	
8	S_S10		NO contact S10	
9	BZS_S7-S10		Reference potential NO contacts S7-10	
11	3P24	V	+24V potential	
12	3P24		+24V potential	

Connector X23

Connector designation:	X23
Type:	4-pin Mini-Combicon MC 1.5/4-G-3.81
Cable length (max.):	30 m

Table 31-17 Connector X23

Pin	Signal	Type	Signal name	Function
1	HS 7	I	Signaling lamp S7	All inputs "High" active
2	HS 8		Signaling lamp S8	
3	HS 9		Signaling lamp S9	
4	HS 10		Signaling lamp S10	

Connector X24

Only the special versions MPP 483 S and MPP 483 L are equipped with these connectors.

Connector designation:	X24
Type:	MCD 1.5/8-G1-3.81 HT BK
Cable length (max.):	1.5 m

Table 31-18 Connector X24

Pin	Signal	Type	Signal name	Pin	Signal	Type	Signal name
B1	S51	I	Ext. key S51	A1	H51	O	LED_S51
B2	S52		Ext. key S52	A2	H52		LED_ S52
B3	S53		Ext. key S53	A3	H53		LED_ S53
B4	S54		Ext. key S54	A4	H54		LED_ S54
B5	S55		Ext. key S55	A5	H55		LED_ S55
B6	S56		Ext. key S56	A6	H56		LED_ S56
B7	S57		Ext. key S57	A7	H57		LED_ S57
B8	S58		Ext. key S58	A8	H58		LED_ S58

	Viewed from the PCB:
B	at top of plug connector
A	at bottom of plug connector

Connector X25

Connector designation:	X25
Type:	MCD 1.5/8-G1-3.81 HT BK
Cable length (max.):	1.5 m

Table 31-19 Connector X25

Pin	Signal	Type	Signal name	Pin	Signal	Type	Signal name
B1	P24_OUT	V	Reference potential +24V	A1	M24_EXT	V	Reference potential +24V
B2	S13	I	Emergency stop button	A2	HS13	O	Emergency stop LED
B3	S14		KT-S14	A3	HS14		LED-S14
B4	S15		KT-S15	A4	HS15		LED-S15
B5	S59 *)		KT-IN3/emergency stop override	A5	H59		LED-S59
B6	S60		Mode selection	A6	H60		LED-S60
B7	S61		Rapid withdrawal	A7	H61		LED-S61
B8	S62 *)		S32 / HGA enabling unit plugged in / terminating connector	A8	M24_EXT	V	Reference potential +24V

*) can only be used as a neutral input without HGA

31.3.2.4 Handheld unit connection HT 6

MPI / OPI X1 interface

The interface supports transfer rates of up to 1.5 MBit/s.

Connector designation:	X1
Plug-connector type:	9-pin sub-D socket
Cable length (max.):	100 m

Table 31-20 MPI / OPI X1 interface

Pin	Signal name	Type	Meaning
1	N.C.	-	Do not use
2	N.C.	-	Do not use
3	RS_DP	I/O	RS-465 differential signal
4	N.C.	-	Do not use
5	M5EXT	V	5 V external ground
6	P5EXT	V	5 V external potential
7	N.C.	-	Do not use
8	XRS_DP	I/O	RS-465 differential signal
9	N.C.	-	Do not use

Enabling X20

Connector designation:	X20
Type:	MCV 1.5/8-G3.81
Cable length (max.):	30 m

Table 31-21 Enabling X20

Pin	Signal name	Type	Meaning
1	ZS1.1		Enabling button 1
2	ZS1.2		Call-up enabling button 1
3	ZS2.1		Enabling button 2
4	ZS2.2		Call-up enabling button 2

Emergency Stop override X21

Connector designation:	X21
Type:	MCV 1.5/8-G3.81
Cable length (max.):	30 m

Table 31-22 Emergency Stop override X21

Pin	Signal name	Type	Meaning
1	NOT_ HALT 1.1		EMERGENCY STOP NC contact 1.1
2	NOT_ HALT 1.2		EMERGENCY STOP NC contact 1.2
3	NOT_ HALT 2.1		EMERGENCY STOP NC contact 2.1
4	NOT_ HALT 2.2		EMERGENCY STOP NC contact 2.2
5/6	N.C.	-	not used
7	XNAUE	I	Emergency Stop override negated
8	3P24_HGA	V	24 V

Handwheel X22

Connector designation:	X22
Type:	MCV 1.5/4-G5.08
Cable length (max.):	30 m

Table 31-23 Handwheel X22

Pin	Signal name	Type	Meaning
1	HR_A	O	Handwheel A
2	HR_XA		Handwheel A negated
3	HR_B		Handwheel B
4	HR_XB		Handwheel B negated

Handheld unit connection XS12

Connector designation:	XS12
Type:	RC-17S1YM2H3SW

Table 31-24 Handheld unit connection XS12

Pin	Signal name	Type	Meaning	Function
1	NOT_ HALT 2.1		EMERGENCY STOP NC contact 2.1	EMERGENCY STOP
2	MPI_A	I/O	RS-485 data	MPI
3	3M24	V	Ground 24V	Supply voltage
4	3P24		+24 V	
5	ZS1.1		Enabling button 1	Enabling function
6	ZS1.2		Call-up enabling button 2	
7	HR_B	O	Handwheel B	Handwheel
8	HR_A		Handwheel A	
9	NOT_ HALT 1.2		EMERGENCY STOP NC contact 1.2	EMERGENCY STOP
10	NOT_ HALT 1.1		EMERGENCY STOP NC contact 1.1	
11	ASS	I	Terminating connector	Terminating connector plugged in
12	NOT_ HALT 2.2		EMERGENCY STOP NC contact 2.2	EMERGENCY STOP
13	MPI_B	I/O	RS-485 data	MPI
14	ZS2.1		Enabling button 2	Enabling function
15	HR_XA	O	Handwheel A negated	Handwheel
16	ZS1.2		Call-up enabling button 1	Enabling function
17	HR_XB	O	Handwheel B negated	Handwheel

31.3.2.5 Handheld unit connection HT 8

Ethernet X1 / X2

Connector designation: X1, X2
Type: RJ-45 jack

Table 31-25 Ethernet X1 / X2

Pin	Signal name	Type	Meaning
1	TD+	O	Transmit data +
2	TD-		Transmit data -
3	RD+	I	Receive data +
4	N.C.	-	not used
5	N.C.	-	not used
6	RD-	I	Receive data -
7	N.C.	-	not used
8	N.C.	-	not used

Panel Present X7

Connector designation: **X7**
Type: 6-pole Phoenix terminal

Table 31-26 Assignment of the interface Panel Present X7

Pin	Signal name	Signal type	Meaning
1	PRES	O	"High": Panel (HT 8) plugged in
2	N.C.	-	not used
3	N.C.	-	not used
4	N.C.	-	not used
5	N.C.	-	not used
6	M	P	Chassis ground

Emergency Stop wiring terminal X8

Connector designation:	**X8**
Type:	4-pole Phoenix terminal

Table 31-27 Assignment of the EMER STOP wiring terminal X8

Pin	Protective circuit
1	On-board jumper between 1 and 2
2	
3	On-board jumper between 3 and 4
4	

Note

Use this terminal for simple routing of the emergency stop cables, optional.

The connector is only used to assist looping through. The connected pins 1 and 2 as well as 3 and 4 have no additional function on the connection module.

Enabling X20

Connector designation:	X20
Type:	MCV 1.5/8-G3.81
Cable length (max.):	30 m

Table 31-28 Enabling X20

Pin	Signal name	Type	Meaning
1	ZUST1P	I	Electronic enabling button 1P
2	ZUST1M	O	Electronic enabling button 1M
3	ZUST2P	I	Electronic enabling button 2P
4	ZUST2M	O	Electronic enabling button 2M
5	N.C.		not used
6	N.C.		not used
7	N.C.		not used
8	N.C.		not used

Emergency Stop override X21

Connector designation:	X21
Type:	MCV 1.5/10-G3.81
Cable length (max.):	30 m

Table 31-29 Emergency Stop override X21

Pin	Signal name	Type	Meaning
1	STOP23	I/O	Emergency Stop NC contact 1.1
2	STOP24		Emergency Stop NC contact 1.1
3	STOP13		Emergency Stop NC contact 2.1
4	STOP14		Emergency Stop NC contact 2.2
5	M	V	
6	N.C.	-	not used
7	IN_S59	I	Emergency Stop override negated
8	P24_FILT	V	24 V
9	IN_S59_EXT	O	Key-operated switch actuated
10	IN_S62_EXT		Terminating connector plugged in

Handheld unit connection XS12

Connector designation:	XS12
Type:	9GX3BXC-T22QF10-0004

Table 31-30 Handheld unit connection XS12

Pin	Signal	Type	Meaning	Function
1	HH_PR_P	I	+ Present line	
2	HH_PR_M		- Present line	
3	HP24	V	24 V HH for present	Voltage supply
4	ZUST2M	O	Enabling button 2M	Enabling function
5	ZUST1P	I	Enabling button 1P	
6	ZUST1M	O	Enabling button 1M	
7	ZUST2P	I	Enabling button 2P	
8	HH_L2.2	I/O	HH emergency stop L2.2	Emergency stop
9	HH_L2.1		HH emergency stop L2.1	
10	HH_L1.2		HH emergency stop L1.2	
11	HH_L1.1		HH emergency stop L1.1	
12	M	V	Chassis ground	Voltage supply
13	ABS_ST_PRES	I	Terminating connector	Terminating connector plugged in

Pin	Signal	Type	Meaning	Function
14	HH_P24	V	24 V HH supply	Voltage supply
15	IDENT_B	I/O	Diff Signal Module Addr.	
16	TX-	O	Ethernet Transmit -	Ethernet transmitted data
17	TX+		Ethernet Transmit +	
18	RX+	I	Ethernet receive +	Ethernet receive data
19	RX-		Ethernet receive -	
20	SHIELD	-	Cable shield	
21	M	V	Chassis ground	Voltage supply
22	IDENT_A	I/O	Diff Signal Module Addr.	

31.3.3 Connection elements for COM board, customer keys and handheld unit connection

This table shows plug connection elements for the following modules:

- COM board (COM)
- Customer keys (KT)
- Connection for handheld units (HGA)

Table 31-31 Connection elements

Module	Connector	Units	Terminal element	Connectable cross-section (max.)	Manufacturer
COM	X10	1	MSTB2,5/3-STZ-5,08,1776168	2.5 mm²	PHOENIX CONTACT
	X20	1	6ES7972-0BA50-0XA0 6ES7972-0BB50-0XA0 *)		SIEMENS
	X60 / X61	2	6FC9348-7HX	0.75 mm²	
	X70	1	A5E00026403		
KT	X11	1	MSTB2,5/3-ST-5,08,1757022	2.5 mm²	PHOENIX CONTACT
	X20 / X23	2	MC1.5/4-ST-3.81, 1803594	1.5 mm²	
	X21/X22	2	MC1.5/12-ST-3.81, 1803675	1.5 mm²	
	X24:A/B X25: A/B	4	MC1.5/8-ST-3.81, 1803633	1.5 mm²	
HGA HT 6	X1	1	6ES7972-0BA50-0XA0		SIEMENS
	X20/X21	2	MC1.5/8-ST-3.81, 1803633	1.5 mm²	PHOENIX CONTACT
	X22	1	MC1.5/4-ST-5.08, 1836095	1.5 mm²	
HGA HT 8	X1 / X2	2	6GK1901-1BB10-2AB0		SIEMENS
	X7	1	MC1.5/6-STZ-3.81 GY BD1-6.1713198	1.5 mm²	PHOENIX CONTACT
	X8	1	MC1.5/4-STZ-3.81 GY BD1-4.1713185	1.5 mm²	
	X 20	1	MC1.5/8-STZ-3.81 GY BD-1-8, 1713208	1.5 mm²	
	X 21	1	MC1.5/10-STZ-3.81 GY BD1-10, 1901658	1.5 mm²	
*) with PG connection					

31.3.4 Input / output images

MPI standard input image

Byte	Bit7	Bit6	Bit5	Bit4	Bit3	Bit2	Bit1	Bit0
n+0	BA switch				Function key	HG connection XS12:11 [1] XS12:13 [2]	Emergency stop override	
							S11 right-hand side momentary -contact	S11 left-hand side momentary -contact
	WS1/4	WS1/3	WS1/2	WS1/1	F21	S62	S60	S59
	F16*)	F11*)	F6*)	F1*)				
n+1	Customer key	Key	Customer key	Extension key	Customer keys			
	S15	WS4, pos.0	S14	S51	S4	S3	S2	S1
n+2	Key			SR key	Rapid traverse override			
	WS4, pos.3	WS4, pos.2	WS4, pos.1	S61	WS5/8	WS5/4	WS5/2	WS5/1
n+3		Extension key	Emergency stop	Customer keys				Extension key
		S53	S13	S10	S9	S8	S7	S52
n+4	Direct control keys							
	DT8	DT7	DT6	DT5	DT4	DT3	DT2	DT1
n+5	Direct control keys							
	DT16	DT15	DT14	DT13	DT12	DT11	DT10	DT9
n+6			Extension keys		Spindle override			
			S58	S57	WS3/8	WS3/4	WS3/2	WS3/1
n+7	Extension keys			Feedrate override				
	S56	S55	S54	WS2/16	WS2/8	WS2/4	WS2/2	WS2/1
*) The function keys are not active if WS1 is assigned.								
[1]) HT 6 / [2]) HT 8								

MPI extended input image

Byte	Bit7	Bit6	Bit5	Bit4	Bit3	Bit2	Bit1	Bit0
n+0	BA switch				Function key	HG connection XS12:11 [1]) XS12:13 [2])	Emergency stop override	
							S11 right-hand side momentary -contact	S11 left-hand side momentary -contact
	WS1/4	WS1/3	WS1/2	WS1/1	F21	S62	S60	S59
	F16*)	F11*)	F6*)	F1*)				
n+1	Customer key	Key	Customer key	Extension key	Customer keys			
	S15	WS4, pos.0	S14	S51	S4	S3	S2	S1
n+2	Key			SR key	Rapid traverse override			
	WS4, pos.3	WS4, pos.2	WS4, pos.1	S61	WS5/8	WS5/4	WS5/2	WS5/1
n+3		Extension key	Emergency stop	Customer keys				Extension key
		S53	S13	S10	S9	S8	S7	S52
n+4	Direct control keys							
	DT8	DT7	DT6	DT5	DT4	DT3	DT2	DT1
n+5	Direct control keys							
	DT16	DT15	DT14	DT13	DT12	DT11	DT10	DT9
n+6			Extension keys		Spindle override			
			S58	S57	WS3/8	WS3/4	WS3/2	WS3/1
n+7	Extension keys			Feedrate override				
	S56	S55	S54	WS2/16	WS2/8	WS2/4	WS2/2	WS2/1
n+8	Function keys							
	F8	F7	F6	F5	F4	F3	F2	F1
n+9	Function keys							
	F16	F15	F14	F13	F12	F11	F10	F9
n+10	Function keys							
	F25	F24	F23	F22	F20	F19	F18	F17
n+11	Reserve							
*) The function keys are not active if WS1 is assigned.								
[1]) HT 6 / [2]) HT 8								

PROFIBUS-DP input image

Byte	Bit7	Bit6	Bit5	Bit4	Bit3	Bit2	Bit1	Bit0
n+0	BA switch				Function key	HG connection XS12:11 [1] XS12:13 [2]	Emergency stop override	
							S11 right-hand side momentary -contact	S11 left-hand side momentary -contact
	WS1/4	WS1/3	WS1/2	WS1/1	F21	S62	S60	S59
	F16*)	F11*)	F6*)	F1*)				
n+1	Customer key	Key	Customer key	Extension key	Customer keys			
	S15	WS4, pos.0	S14	S51	S4	S3	S2	S1
n+2	Key			SR key	Rapid traverse override			
	WS4, pos.3	WS4, pos.2	WS4, pos.1	S61	WS5/8	WS5/4	WS5/2	WS5/1
n+3		Extension key	Emergency stop	Customer keys				Extension key
		S53	S13	S10	S9	S8	S7	S52
n+4	Direct control keys							
	DT8	DT7	DT6	DT5	DT4	DT3	DT2	DT1
n+5	Direct control keys							
	DT16	DT15	DT14	DT13	DT12	DT11	DT10	DT9
n+6			Extension keys		Spindle override			
			S58	S57	WS3/8	WS3/4	WS3/2	WS3/1
n+7	Extension keys			Feedrate override				
	S56	S55	S54	WS2/16	WS2/8	WS2/4	WS2/2	WS2/1
n+8	Function keys							
	F8	F7	F6	F5	F4	F3	F2	F1
n+9	Function keys							
	F16	F15	F14	F13	F12	F11	F10	F9
n+10	Function keys							
	F25	F24	F23	F22	F20	F19	F18	F17
n+11	Reserve							
n+12				Feedrate override				
				WS2/16	WS2/8	WS2/4	WS2/2"	WS2/1
n+13				Spindle override				
				WS3/16	WS3/8	WS3/4	WS3/2	WS3/1
*) The function keys are not active if WS1 is assigned.								
[1]) HT 6 / [2]) HT 8								

Optional 4-byte handwheel

n+0	Handwheel 1
n+1	Handwheel 1
n+2	Handwheel 2
n+3	Handwheel 2

Keyboard layout - input image MPP 483

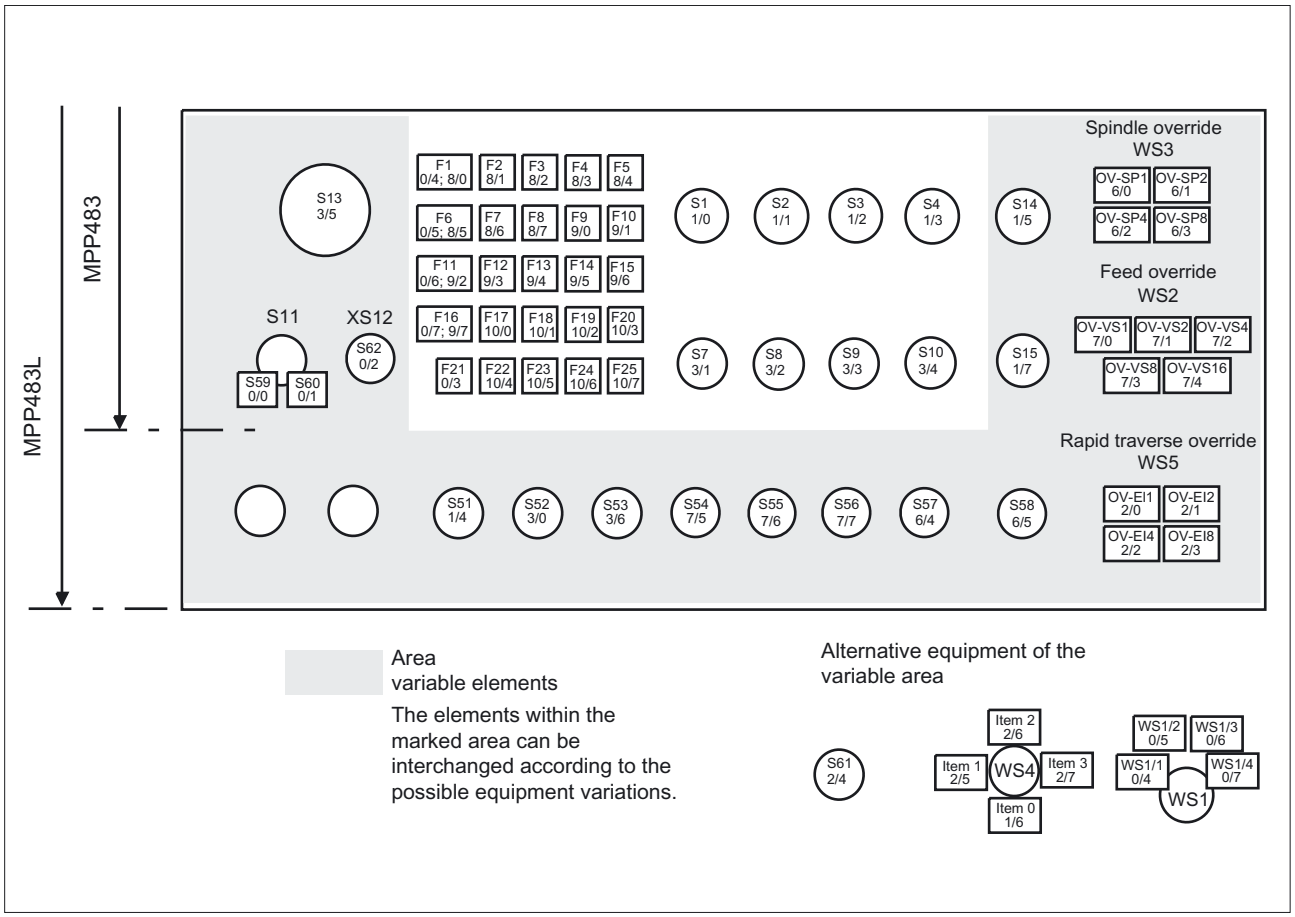

Figure 31-10 Front view

Output image MPI / PROFIBUS-DP

Byte	Bit7	Bit6	Bit5	Bit4	Bit3	Bit2	Bit1	Bit0
n+0	Customer keys							
	Hs8	HS7	HS15	HS14	HS4	HS3	HS2	HS1
n+1							Customer keys	
							HS10	HS9
n+2	Extension keys							
	H58	H57	H56	H55	H54	H53	H52	H51
n+3					SR key	Feedback for emergency stop	Extension keys E9/E10 when S11 is not used	
					H61	HS13	H60	H59
n+4	Function keys							
	HF8	HF7	HF6	HF5	HF4	HF3	HF2	HF1
n+5	Function keys							
	HF16	HF15	HF14	HF13	HF12	HF11	HF10	HF9
n+6	Function keys							
	HF24	HF23	HF22	HF21	HF20	HF19	HF18	HF17
n+7								Function key
								HF25

Keyboard layout - output image MPP 483

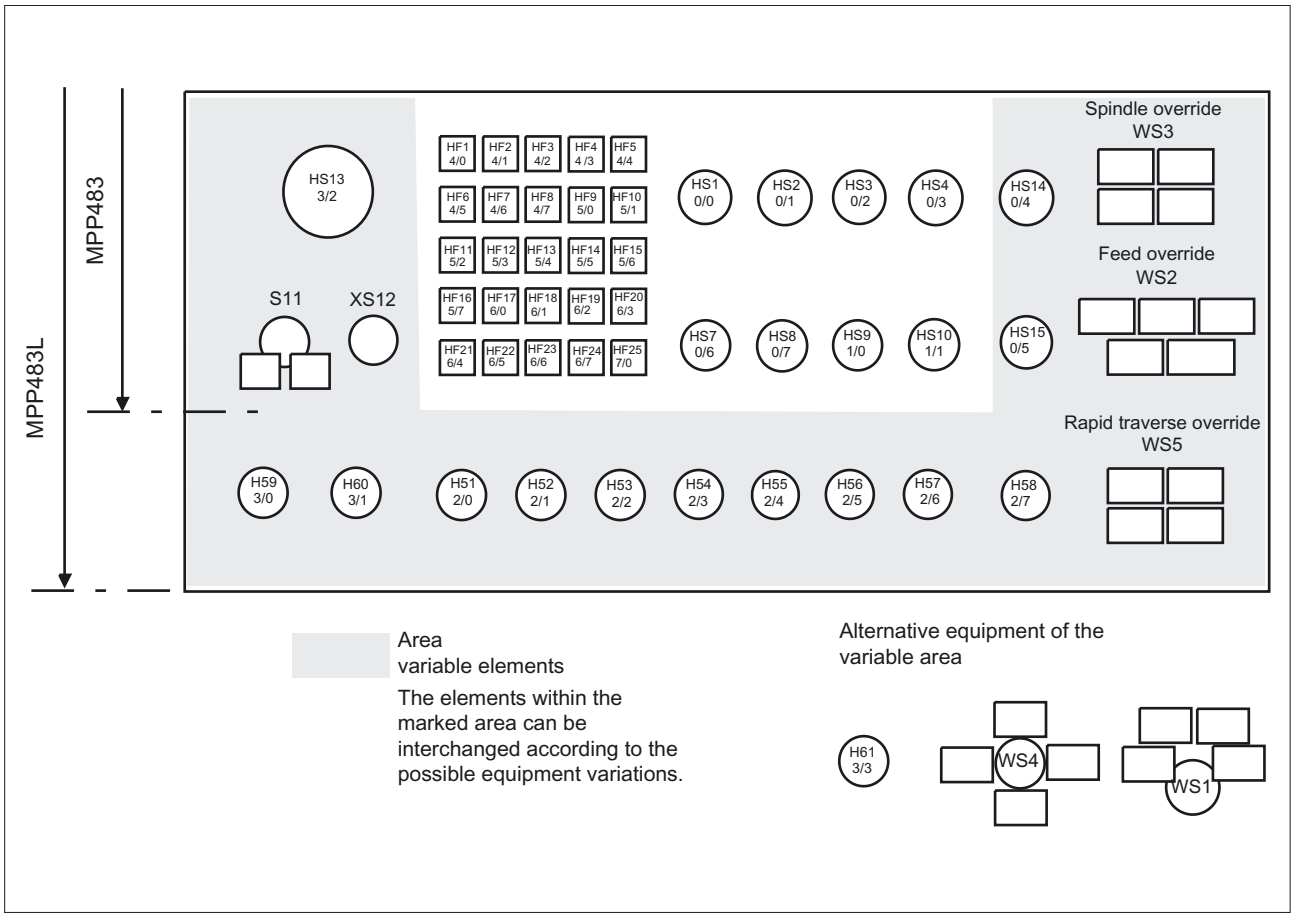

Figure 31-11 Front

31.4 Mounting

Dimensions for MPP 483 and MPP 483 L

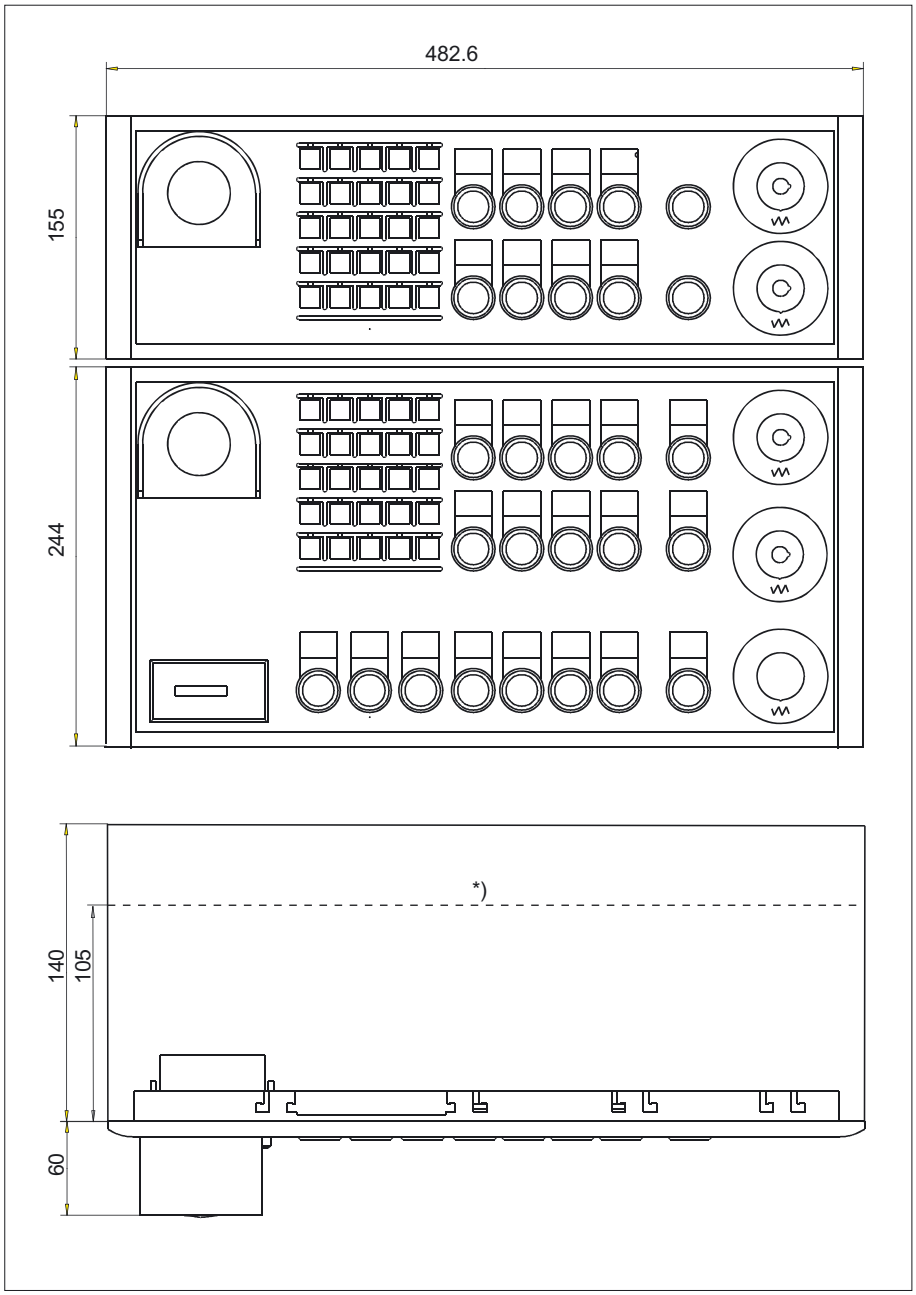

Figure 31-12 Dimension drawing for MPP 483 and MPP 483 L

*) The depth of 105 mm is only attainable with a Profibus adapter.

Panel cutout for MPP 483 and MPP 483 L

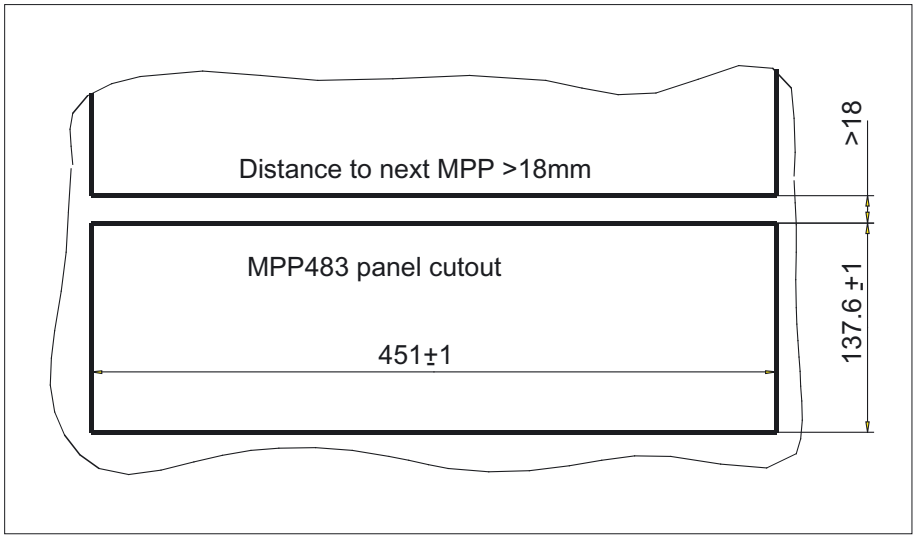

Figure 31-13 Panel cutout for MPP 483

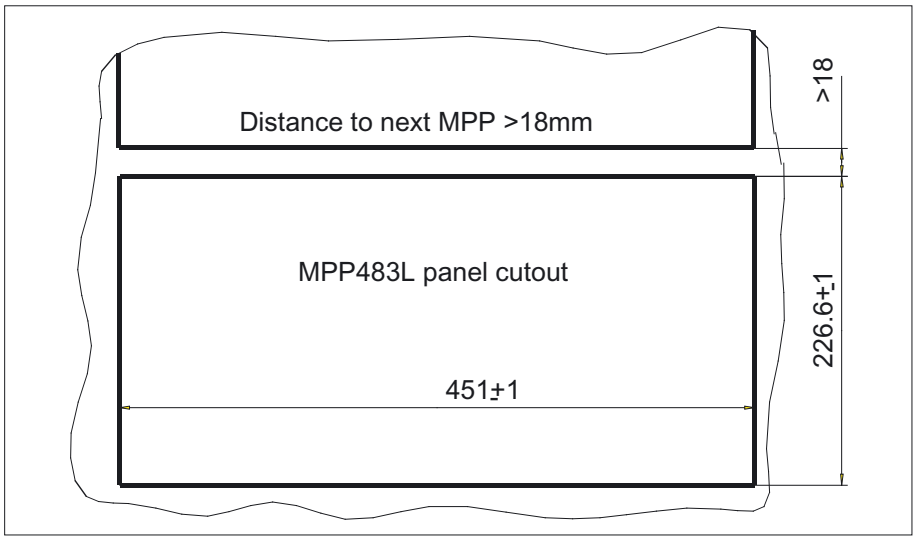

Figure 31-14 Panel cutout for MPP 483 L

The MPP 483 is attached to the rear side of the operator panel using 9 tension jacks (contained in the delivery kit). The tightening torque is 0.4 mm.

Installation position

The mounting position is max. 60° to the vertical.

For mounting positions greater than 60°, a fan must also be installed to keep the ambient temperature of the machine control panel constantly below 55°C.

Mounting position of LEDs

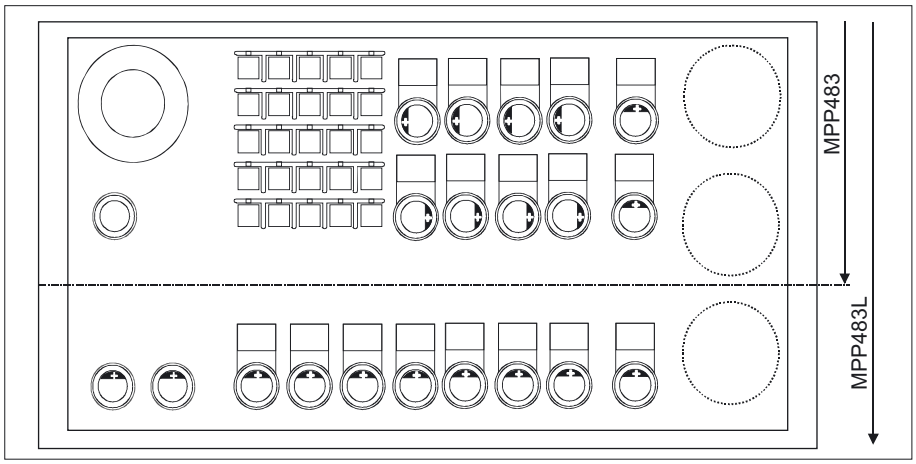

Figure 31-15 Mounting position for MPP 483 / MPP 483 L LEDs

Table 31-32 Identification of anode connection

	Insert polarity+ of LEDs in key on side marked

Installing Profibus adapter

If no handwheels are connected, the installation depth can be reduced from 140 mm to 105 mm. For this, insert the PCB Profibus adapter (1) according to the figure.

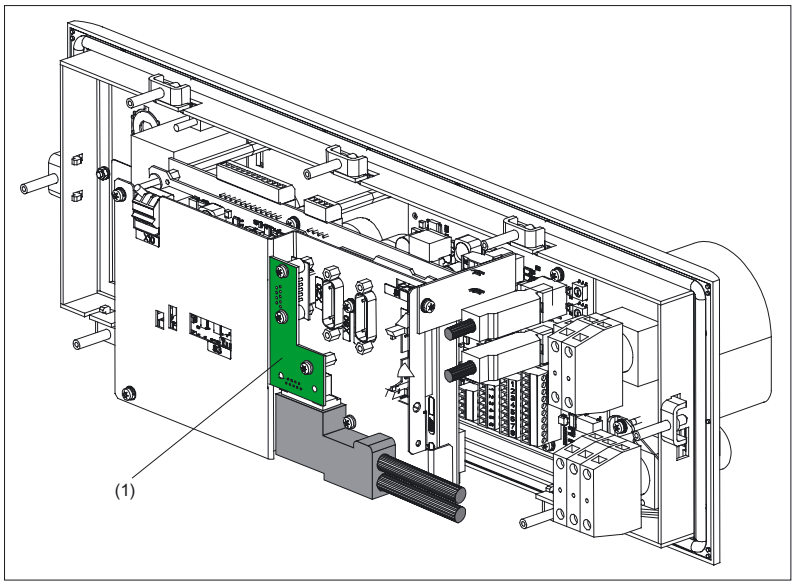

Figure 31-16 Installing Profibus adapter

31.5 Connectors

31.5.1 MPP 483

Connecting the 24V supply

The 24V supply is connected via a 3-pin terminal block at connector X10 and X11 to the rear of the machine control panel (see Figure: "Rear side of MPP 483 with interfaces" in section: "Interfaces" → "Overview").
The protective ground is secured to the M5 bolt (see Figure: "MPI connection").

⚠ DANGER
The 24VDC power supply must always be grounded and designed as Protective Extra Low Voltage (PELV) - protection by function low voltage with safe isolation!

Emergency stop circuit connection

The emergency stop circuit connections are shown in figures "MPI connection" and "PROFIBUS DP connection."

MPI connection

- Connection of X1 (HGA) to X20 (COM board) and to control

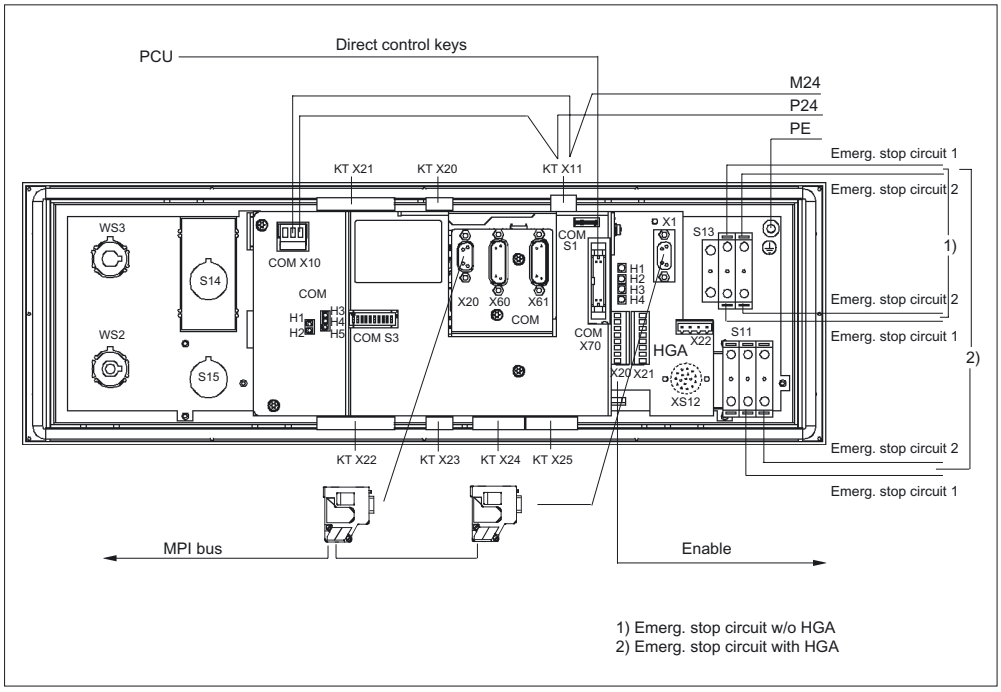

Figure 31-17 MPI connection

PROFIBUS DP connection

- DP connection via X20 (COM board) to control
- MPI connection via X1 (HGA) to PCU of panel
- Handwheel 1 from X60 (COM board) to connection X22 (HGA) for handheld unit

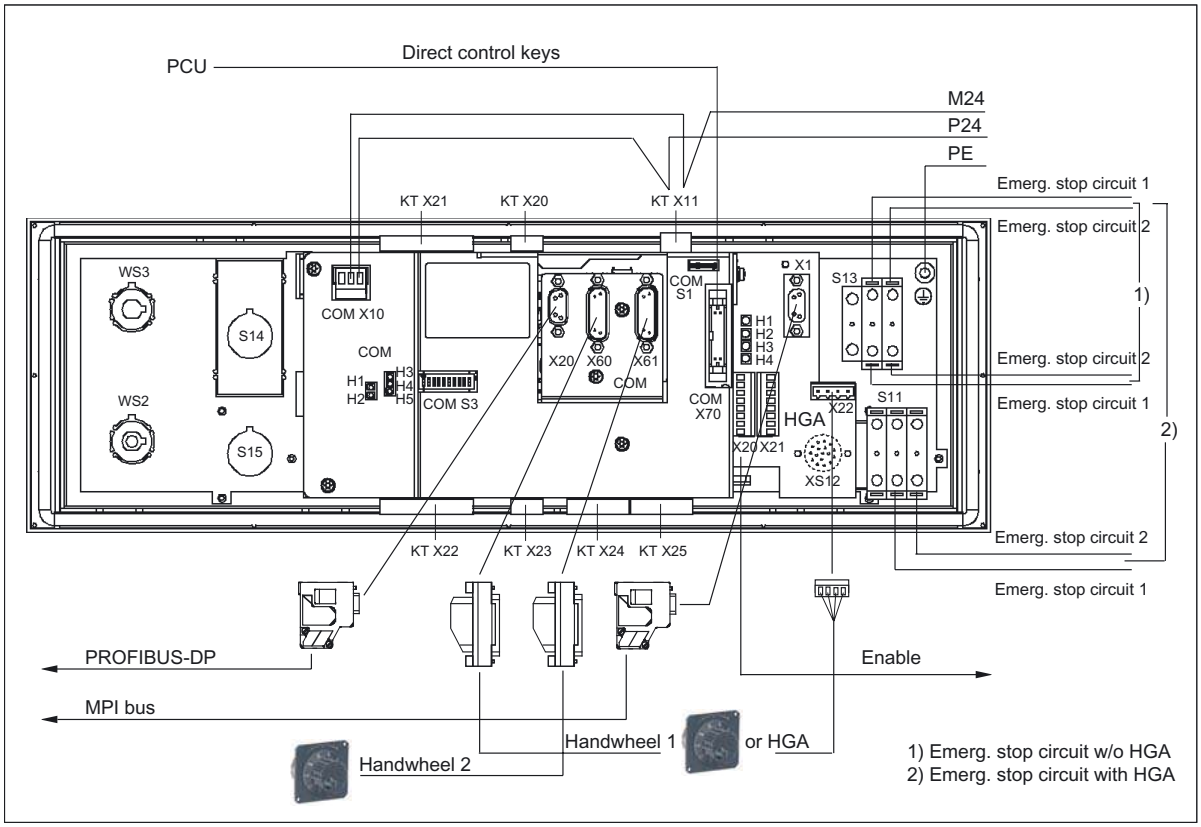

Figure 31-18 PROFIBUS DP connection

Connection for HT 8

- DP connection via X20 (COM board) to control
- Ethernet connection X1 / X2

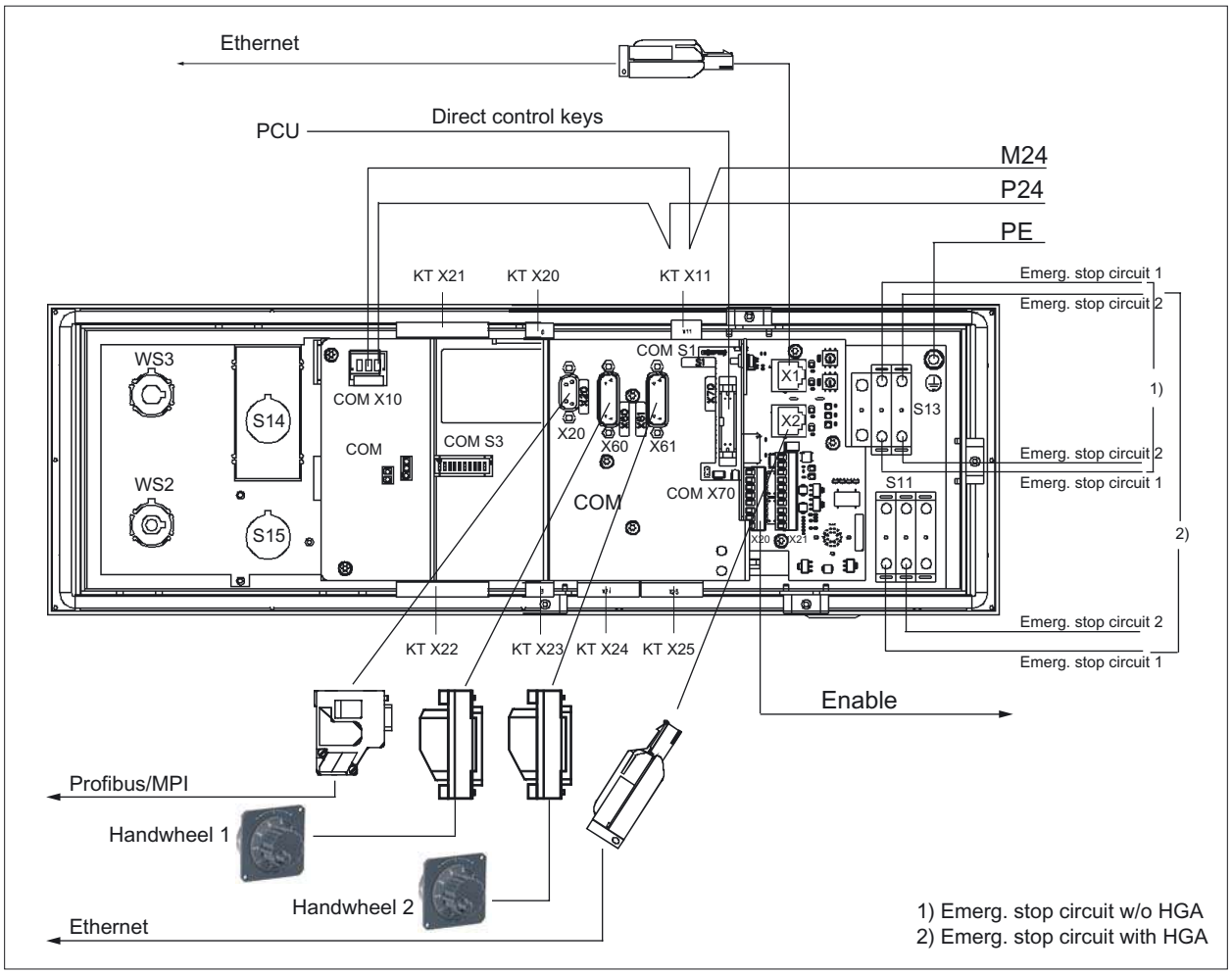

Figure 31-19 Ethernet connection

Individual wiring connection

Selector switches and individual contacts are connected in accordance with the customer-specific links required (see Figure in section: "Customer keys (KT) module").

Note

Supply voltages for inputs and outputs must always be grounded!

31.5.2 COM board

The COM board provides communication via the bus and forms the interface to the superordinate system.
The parameters are set on coding switch S3.

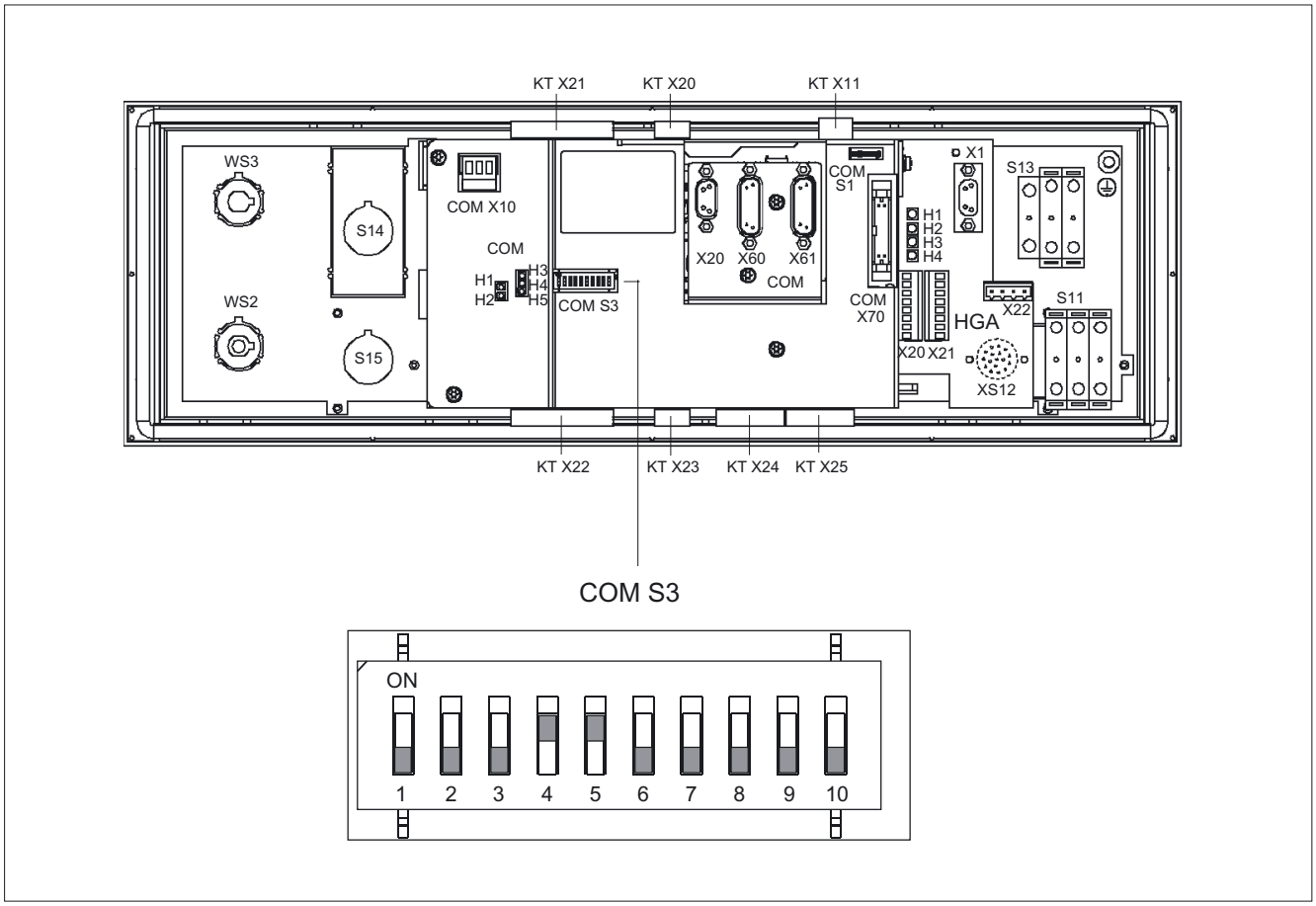

Figure 31-20 Coding switch S3

31.5.3 Customer keys

The customer keys (KT) module links the operator panel, repeater and COM board.

The inputs for handheld unit connection and extension keys are opto-decoupled. The outputs belonging to these are issued by high-side drivers.

The floating individual contacts of function keys S1 ... S4 and S7 ... S10 are shown in the figure.

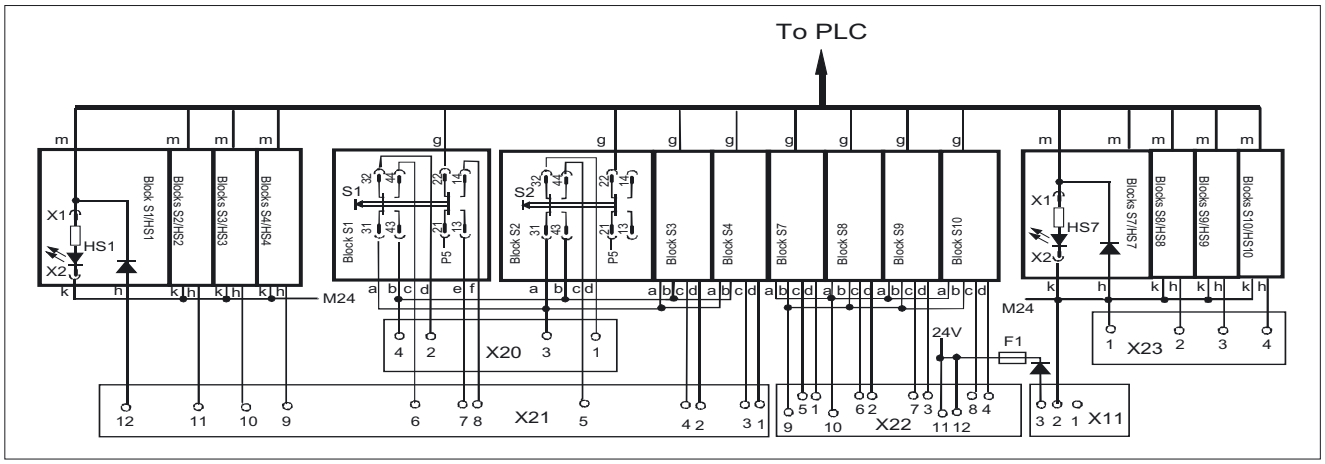

Figure 31-21 Individual wiring of the customer keys
(a, b, …, m designate IN and OUT of the individual blocks)

31.5.4 Handheld unit connection HT 6

The connection for handheld units (HGA) of the HT 6 has three function complexes:

- Two-channel version of enabling function
- Integrated repeater
- Connection of HT6 and BHG

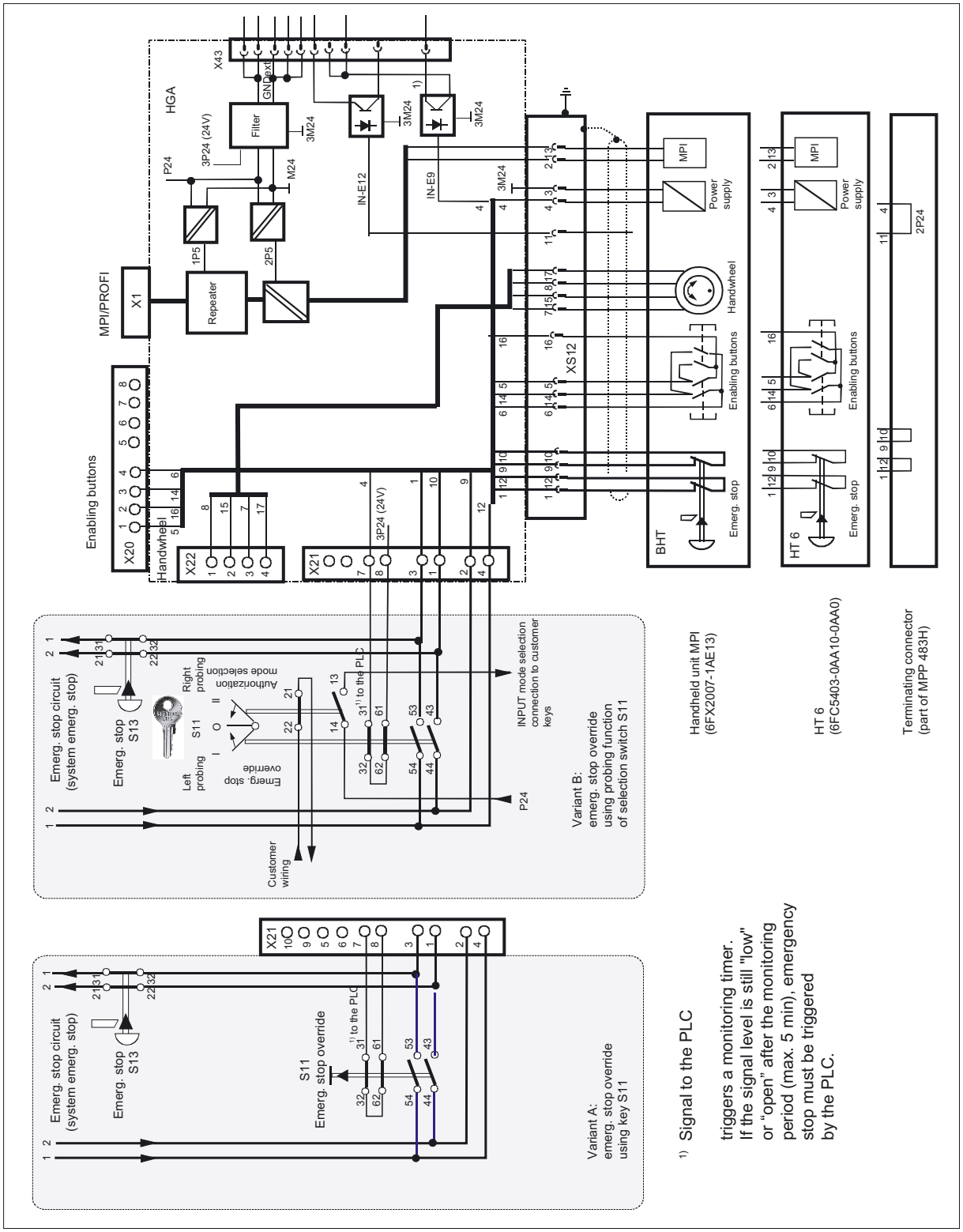

Figure 31-22 Handheld unit connection HT 6

Terminating connector

I12 (Word 0 Bit 2) is used to interrogate whether a connection plug or handheld unit is plugged in.

Keyswitch S11

- Key-operated button, left probing: "Emergency stop override" → Interrogation via E59
- Keyswitch, right probing: "Customer function" → Interrogation via S60
- Initiation of a monitoring time for checking the operability of the emergency stop override function
- Positive-action contacts between emergency stop override and emergency stop monitoring acc. to IEC 60 947-5-1, Annex K and DIN VDE 0660 part 200
- Interruption to power supply for handheld unit connection when S11 is pressed (emergency stop override)

Override S11

All functions correspond to the key-operated button S11.

⚠ WARNING

It is the user's responsibility to ensure that the enable key is designed per DIN EN 602041-1, Subsection 9.2.5.6, and, when released or pushed down, stops dangerous movements reliably.

When using S11 with the "EMERGENCY STOP" jumper function, in addition to Fig.: "Handheld unit connection", dangerous movements should be interlocked by the PLC using S11 and time monitoring initiated at the same time. After the monitoring time (max. 5 min), if the signaling contacts on S11: 31/32 and 61/62 are not closed again correctly, an "emergency stop" should be triggered by the PLC.

Functional reliability of emergency stop and enabling circuits

(see Figure: "Handheld unit connection HT 6)

Emergency stop override

The emergency stop override is undertaken in the locking position of keyswitch S11.
The emergency stop circuit in the handheld unit is overridden during connecting using the left-hand position (I).
The right-hand position (II) is intended for user-specific use or for authorizing the operating mode selection.

Emergency stop circuits

The emergency stop circuit is a two-channel configuration with the following layout:

- Kreis1
  NC contact S13:31/32→X21:3/S11:53→XS12:9→emergency stop handwheel→XS12:10→X21:4→S11:54
- Circuit2
  NC contact S13:21/22→X21:1/S11:43→XS12:12→emergency stop handwheel→XS12:1→X21:2→S11:44

To avoid interruption of the emergency stop circuits on changeover between the handheld unit and the terminator at XS12, the emergency stop contacts of the handheld unit can be jumpered via S11.

- The S11:53/54 contact overrides the XS12:9/10 emergency control contact of the handheld unit in circuit 1
- The S11:43/44 contact overrides the XS12:1/12 emergency control contact of the handheld unit in circuit 2

The time monitoring function in the PLC serves to detect malfunctions in switch S11:

If contact S11:31/32→61/62 does not close properly within the specified time frame, the PLC must interrupt the emergency stop circuit. The contact is interrogated via I9 Word 0, Bit 0 of the PLC input image (see section: "Interfaces" → "Input / output images").

Enable circuits

The enabling function for the MPP 483 is designed as two-channel function:

- The enabling buttons are called up via X20:2→X12:16 and X20:4→X12:6
- The interrogation is undertaken via XS12:5→X20:1 and XS12:14→X20:3
- In addition, the power supply for the handheld units connected at XS12:4 is interrupted via contact S11:31/32 and 61/62→X21:7 when S11 is actuated.
- The interlock between S11 and the enable key must be implemented in the PLC.

Note

Only 2-channel handheld units can be connected.

31.5.5 Handheld unit connection HT 8

The connection for handheld units (HGA) of the HT 8 has four function complexes:

- Two-channel version of enabling function
- 3 Port Ethernet Switch
- Connection of HT8
- Module address

The function of the emergency off override via S11 corresponds to the handheld unit connection of the HT 6.
Information on this can be found in Section: "Connections" → "Connection for handheld units HT6".

All other functions can be found in the figure.

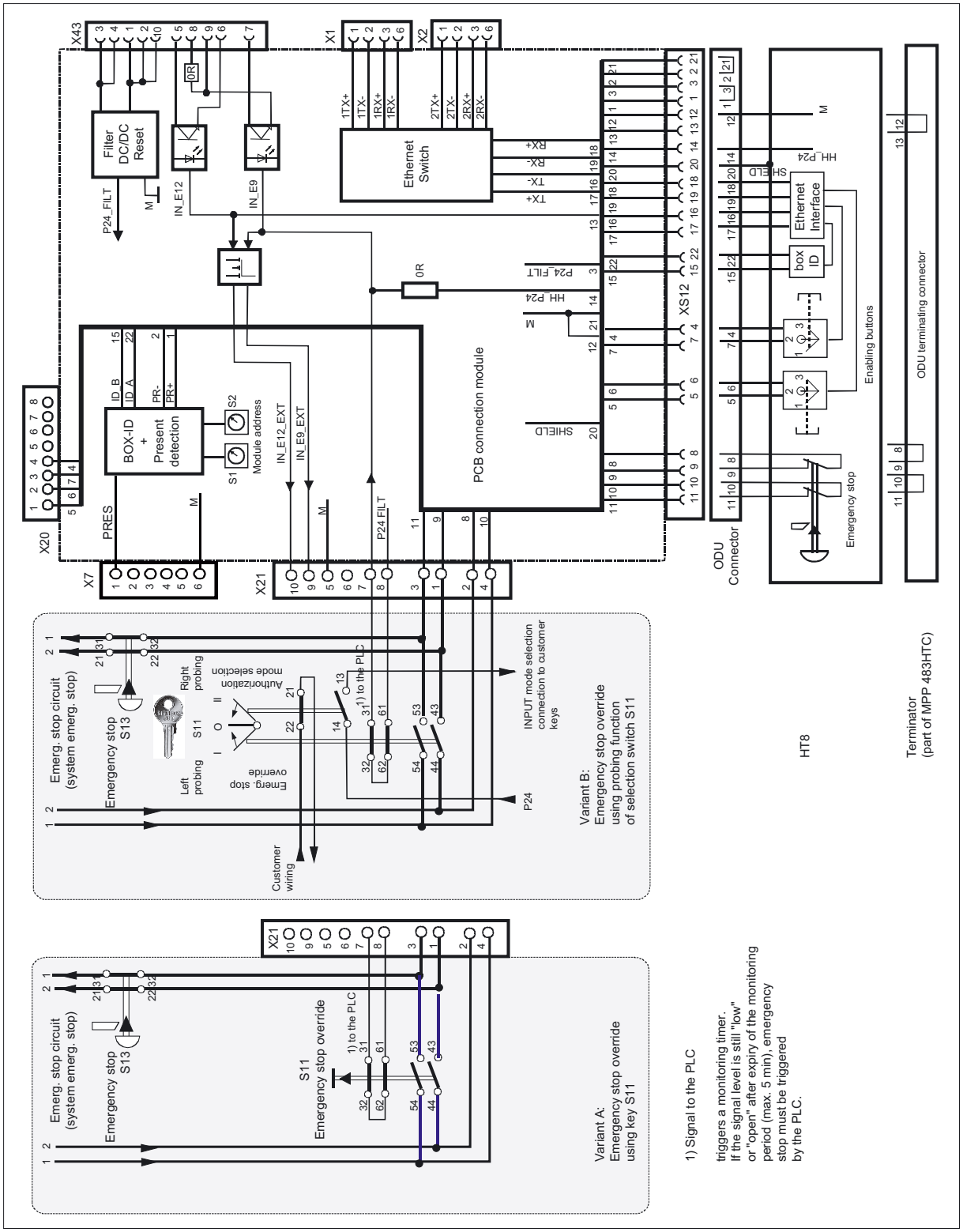

Figure 31-23 Handheld unit connection HT 8

31.6 Circuits and wiring

External control of signaling lamps

The following circuit diagram relates to the lights in HS1 to HS4 and HS7 to HS10.

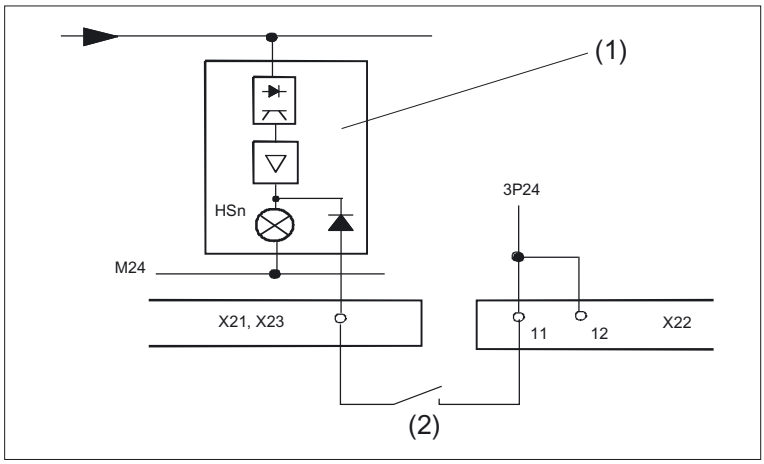

Figure 31-24 External control of signaling lamps

(1) Block Sn
(2) External contact

Circuit for emergency stop button

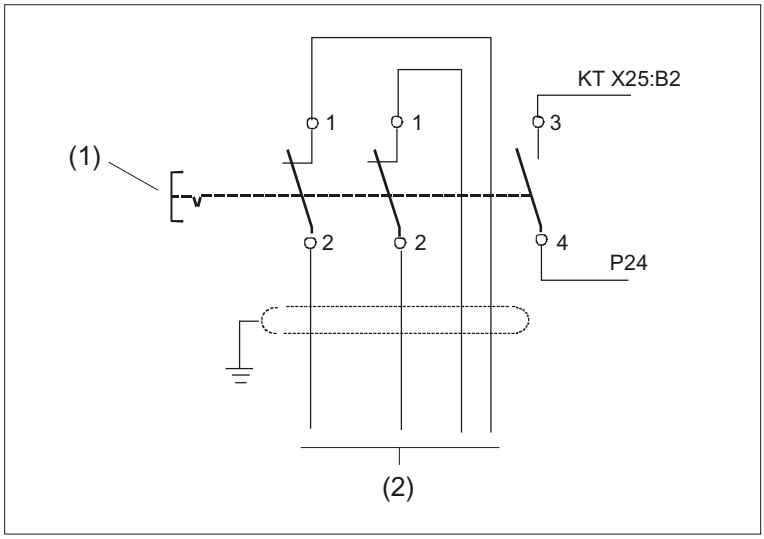

Figure 31-25 Circuit for emergency stop button

(1) Emergency stop button S13
(2) Emergency stop of the machine control

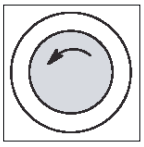

Emergency stop button
Press the red button in emergencies:

- if life is at risk,
- When there is a danger of the machines or workpiece being damaged.

Turn the EMERGENCY STOP button counterclockwise to unlatch it.

Applies to drives:
As a rule, when operating the emergency stop button, all drives are brought to a standstill with max. braking torque.



Machine manufacturer
For other reactions to the emergency stop:
refer to the machine tool manufacturer's instructions

Extension keys connection

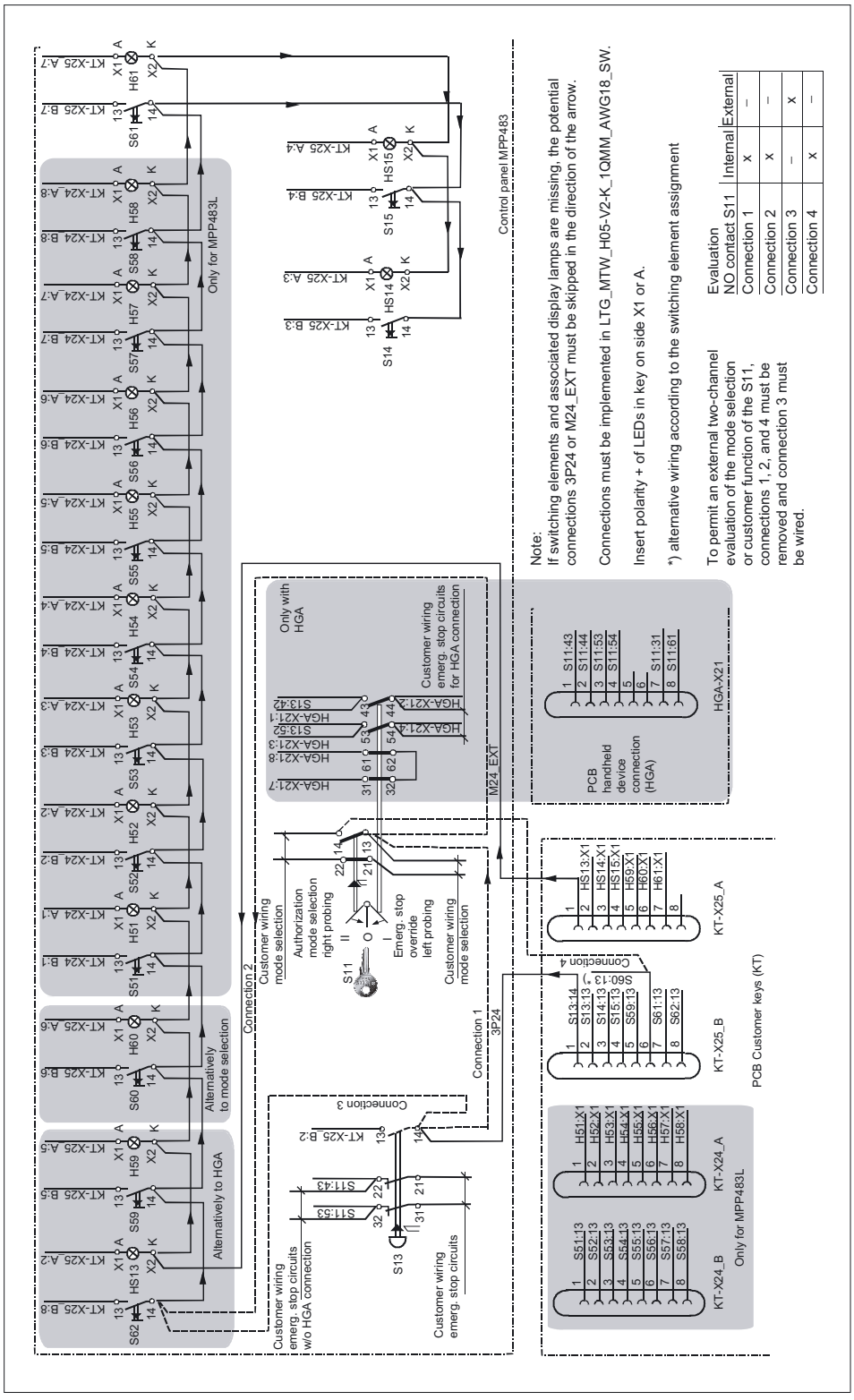

Figure 31-26 Extension keys connection

Direct control key connection

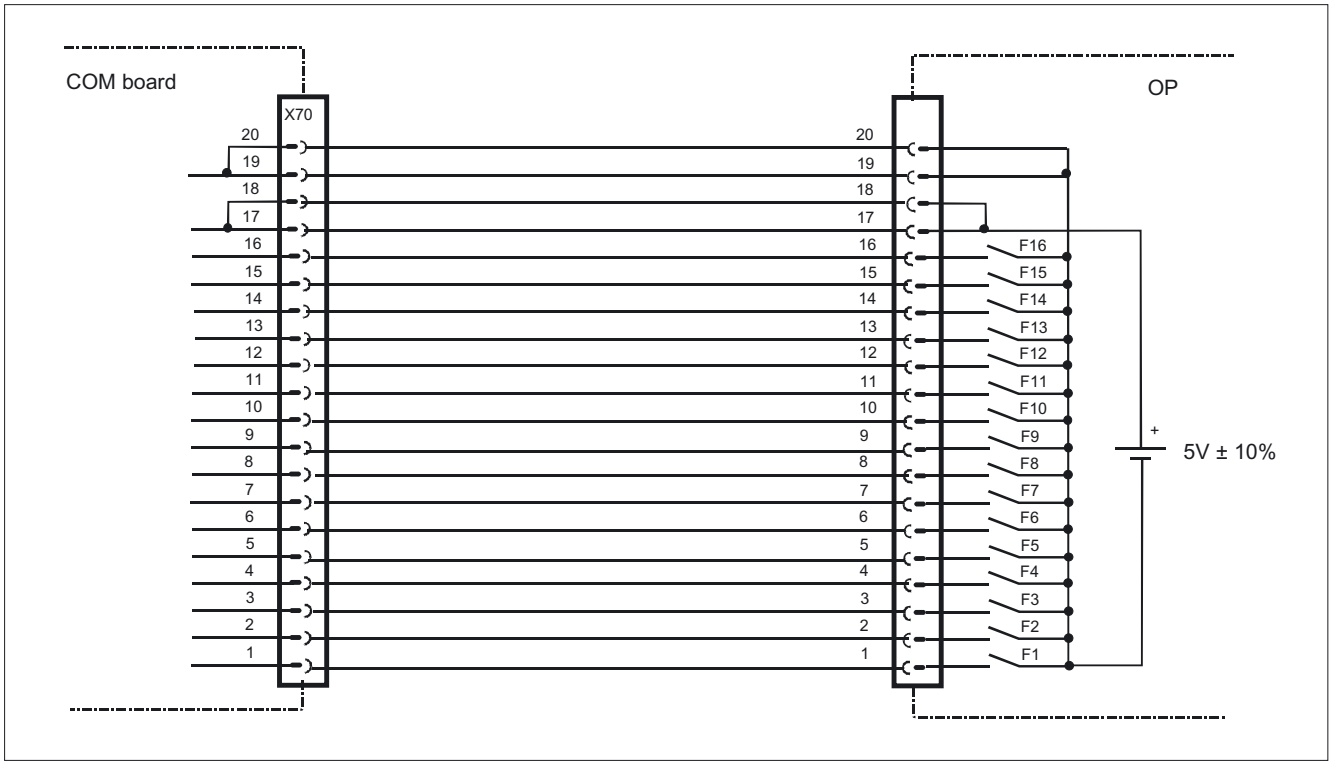

Figure 31-27 Direct control key connection

Customer function S11

The NC-NO combination 3SB34 03-0A is right probing and a customer function of the S11. The NO contact is wired on delivery and can be queried through the MPP 483. The probing function facilitates mode selection.

If an external evaluation of both contacts is required, the internal wiring on the NO contact 1.3/1.4 of the S 11 must be removed (see Fig.: "Extension keys connection" in this section).

- Remove connection 1 and connection 4
- If connection 2 exists, wire the connection of S11:1.3 to S13:1.4

Customer keys 2-channel connection

This figure shows an example of a connection for the 2-channel evaluation of the keys S1 … S4 and S7 … S10.

Connection:

- Nonequivalent sensor 2-channel non-equivalent connected
- Internal sensor power supply
- Connection to ET200S module, EM 4/8 F-DI DC24

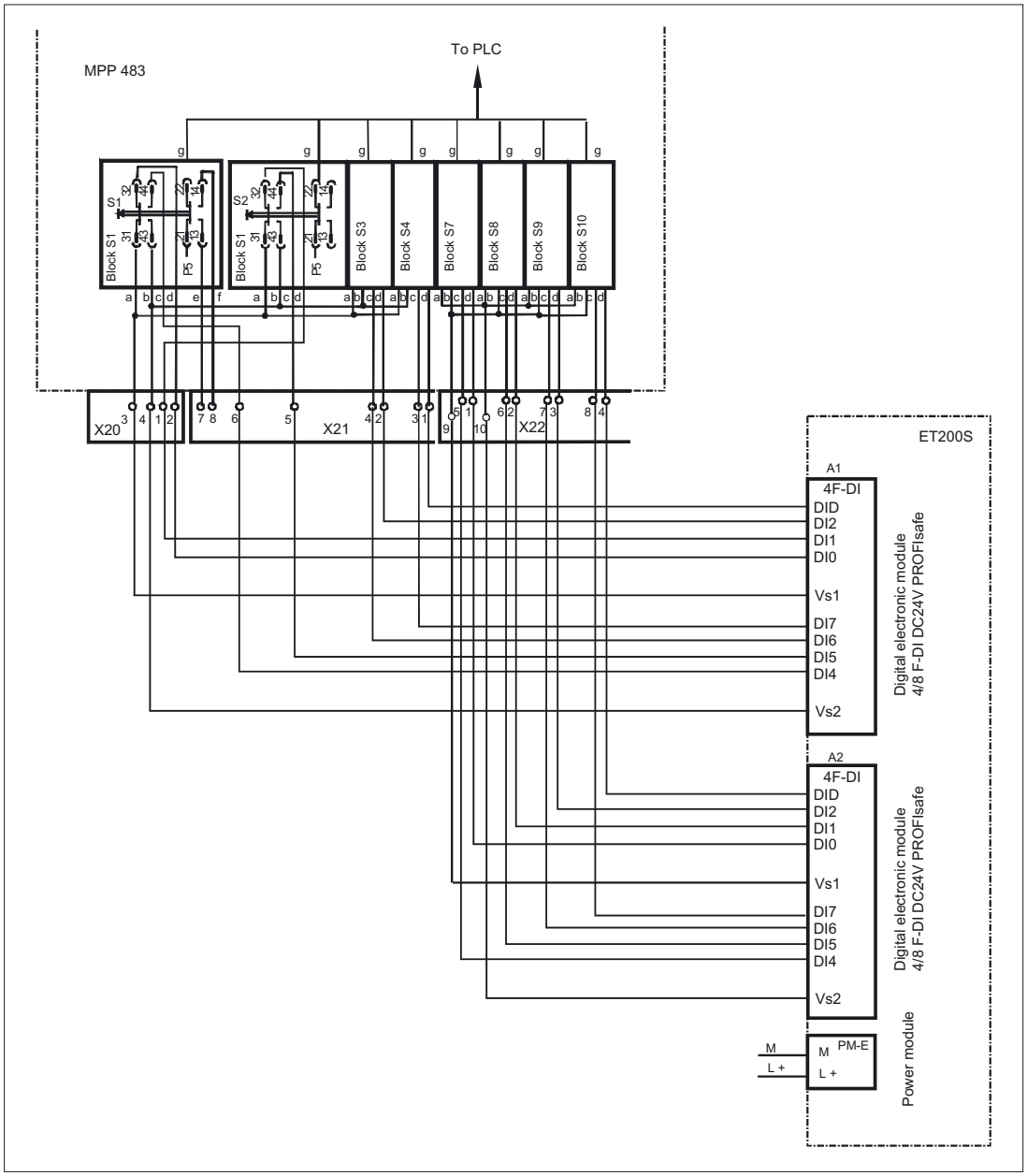

Figure 31-28 Customer keys 2-channel connection

31.7 Initialization

The configurations which are available for the MPP 483 are displayed broken down by PROFIBUS DP and MPI (GD) communication protocols.

For PROFIBUS DP, the PROFIBUS slave ID which has been specified by PI is also named.

	Slave ID	Configuration	IN/OUT
MPI (GD)		Standard	8/8 bytes
		Extended standard	12/8 bytes
PROFIBUS DP	8122	Standard	14/8 bytes
		Standard + handwheel	14/8 bytes + 2/0 words

Software version

If there is still no communication with the control / PROFIBUS master, the MPP 483 software version can be output on the panel using the LEDs.

The output is activated by pressing the "F21" and "F25" buttons at the same time. Flashing of the LEDs is thereby suppressed and the software version output on the function key block using three digits.
The individual digits are expressed in hexadecimal format by the number of LEDs activated in the first three LED lines on the MPP.
The lowest value bit position is always on the right.

The software version of the MPP V 02.01.00.00 is shown in the example given.

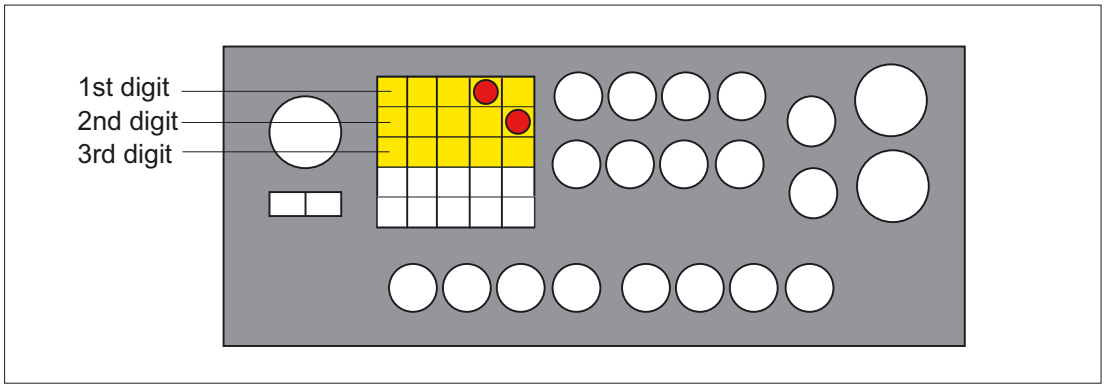

Figure 31-29 Sample displays of software version

Note

The software version can only be output while there is no communication with the control system.
Once communication has taken place, the software version is only displayed again after the power to the MPP 483 has been switched OFF and ON!

Settings for coding switch S3

Table 31-33 Settings for coding switch S3 for MPI

1	2	3	4	5	6	7	8	9	10	Meaning
									off	MPP 483 with MPI Communication
								off		- compatible mode 8/8 bytes I/O
								on		- extended assignment 12/8 bytes I/O
						on	on			Reserved
						on	off			Parameter set 3
						off	on			Parameter set 2
						off	**off**			Parameter set 1
		on	on	on	on					Bus address: 15
		on	on	on	off					Bus address: 14
		on	on	off	on					Bus address: 13
		on	on	off	off					Bus address: 12
		on	off	on	on					Bus address: 11
		on	off	on	off					Bus address: 10
		on	off	off	on					Bus address: 9
		on	off	off	off					Bus address: 8
		off	on	on	on					Bus address: 7
		off	**on**	**on**	**off**					**Bus address: 6**
		off	on	off	on					Bus address: 5
		off	on	off	off					Bus address: 4
		off	off	on	on					Bus address: 3
		off	off	on	off					Bus address: 2
		off	off	off	on					Bus address: 1
		off	off	off	off					Bus address: 0
	on									200 ms transmission cycle time
	off									100 ms transmission cycle time
on										Baud rate: 1.5 Mbaud OPI
off										Baud rate: 187.5 Kbaud MPI

The switch positions highlighted correspond to the standard setting.

Parameter set 1: GD parameters 1,1,1 - 1,2,1 (fixed, regardless of bus address)

Parameter set 2: GD parameters 2,1,1 -2,2,1 (fixed, regardless of bus address)

Parameter set 3: Assignment depends on the bus address set

Table 31-34 Settings for coding switch S3 for PROFIBUS DP

1	2	3	4	5	6	7	8	9	10	Meaning
									on	MPP 483 as PROFIBUS slave
							off	off		Reserved
off	off	off	off	off	off	off				Bus address: 0
on	off	off	off	off	off	off				Bus address: 1
off	on	off	off	off	off	off				Bus address: 2
on	on	off	off	off	off	off				Bus address: 3
...	...	...	...	...	...	...				etc.
off	off	on	on	on	on	on				Bus address: 124
on	off	on	on	on	on	on				Bus address: 125
off	on	on	on	on	on	on				Bus address: 126

Bits 8 and 9 are reserved during PROFIBUS mode and should be assigned "off".

Table 31-35 Module address connection module HT 8

8	7	6	5	4	3	2	1	Meaning
S1				S2				Switch
0 to F				o to F				Module address

LEDs

- HF1 to HF25
- HS1 to HS4
- HS7 to HS10

After power to the MPP 483 is switched ON, all LEDs / lights are first activated.

Once the MPP 483 has been powered up internally, the LEDs flash at different frequencies.

- For setting the MPP 483 with GD communication (compatible mode) using ~ 80 Hertz
- For setting the MPP 483 as PROFIBUS slave using ~ 30 Hertz

On the MPP 483, all LEDs above the buttons flash if there is no communication with the control system / PROFIBUS master.

Table 31-36 LEDs on the COM board

	H1	H2	H3	H4	H5
After power ON	Red	off	Green	Yellow	Red
During GD communication	Off	Off	Green	*Yellow**)	Red
PROFIBUS communication without master	Red	Off	Green	Off	*Green* *)
PROFIBUS communication with master	Off	Off	Green	Off	Green
Fatal error	*Red* *)	Off	*Green* *)	*Yellow**)	*Green* *)
*) LED flashing					

31.8 Communication

31.8.1 MPI Communication

GD parameters

The following table contains the default parameters (which depend on the bus addresses) for the GD circuits on the MPP 483.

Table 31-37 GD parameters

Parameter set	Bus address	GD parameters	
		MPI	OPI
3	0	Reserved	2.38.0 - 2.22.0
3	1	Reserved	3.38.0 - 3.22.0
3	2	Reserved	4.38.0 - 4.22.0
3	3	Reserved	5.38.0 - 5.22.0
3	4	5.1.1 - 5.2.1	6.38.0 - 6.22.0
3	5	5.1.1 - 5.2.1	7.38.0 - 7.22.0
3	6	8.38.0 - 8.22.0	8.38.0 - 8.22.0
3	7	4.1.1 - 4.2.1	9.38.0 - 9.22.0
3	8	4.1.1 - 4.2.1	10.38.0 - 10.22.0
3	9	3.1.1 - 3.2.1	11.38.0 - 11.22.0
3	10	3.1.1 - 3.2.1	12.38.0 - 12.22.0
3	11	2.1.1 - 2.2.1	13.38.0 - 13.22.0
3	12	2.1.1 - 2.2.1	14.38.0 - 14.22.0
3	13	1.1.1 - 1.2.1	15.38.0 - 15.22.0
3	14	1.1.1 - 1.2.1	16.38.0 - 16.22.0
3	15	1.1.1 - 1.2.1	1.38.0 - 1.22.0
1	X	1.1.1 - 1.2.1	1.1.1 - 1.2.1
2	X	2.1.1 - 2.2.1	2.1.1 - 2.2.1

MPI mode

The assignment, quantity structure and standard and extended modes are shown in section: "Interfaces" → "Input / output images."

The standard mode is compatible with PP 012. When compared with the extended mode, only the first column of the function keys can be interrogated in standard mode.

31.8.2 PROFIBUS communication

31.8.2.1 Prerequisites

The assignment and quantity structure of PROFIBUS mode are shown in section: "Interfaces" → "Input / output images".

PROFIBUS mode also offers the following functions:

- Connection of two handwheels
- 5-position spindle override

Prerequisites

The following components are needed as prerequisites for adding a DP slave MPP to the hardware configuration:

- SIMATIC STEP 7
- GSD file of DP slave MPP
- Graphics files of DP slave MPP

SIMATIC STEP 7

The GSD file for the DP slave MPP is required in the following version or later:

- SI008122.GSD version 1.0 or later

GSD file

A GSD file contains all the properties of a DP slave in ASCII format. For each DP slave, SIMATIC STEP 7 requires a module-specific GSD file so that the DP slave can be found in the hardware catalog.

Path

The DP slave MPP is shown in SIMATIC STEP 7 in the hardware catalog of “HW Config” under the following path:

- **PROFIBUS–DP > Other FIELD DEVICES > NC/RC > Motion Control > SINUMERIK MPP**

Import

A GSD file SIMATIC STEP 7 is imported in "HW Config" using the menu:

- **"Tools" > "Install new GSD file"**

Then select the file: **SI8122.GSD** and open it.

Graphics file

The graphics files belonging to the GSD file:

- SI8122_n.bmp

is used to depict the MPP in STEP 7.

31.8.2.2 Configuring the DP slave MPP 483

This section describes how to configure a DP slave MPP with reference to the hardware configuration for a SIMATIC S7 project shown in the figure by way of example.

The hardware configuration has the following modules:

- SIMATIC station 300 with SINUMERIK 810D/840D and PLC 317-2DP
- SINUMERIK MPP with module: Standard, handwheel

Procedure

Configuring the DP slave MPP as an S7 project involves the following steps:

1. Add the DP slave MPP to the configuration **(1)**
2. Set the PROFIBUS address
3. Add the appropriate module to the DP slave MPP according to the functions required. **(2)**
4. Set the I/O addresses for the individual slots.

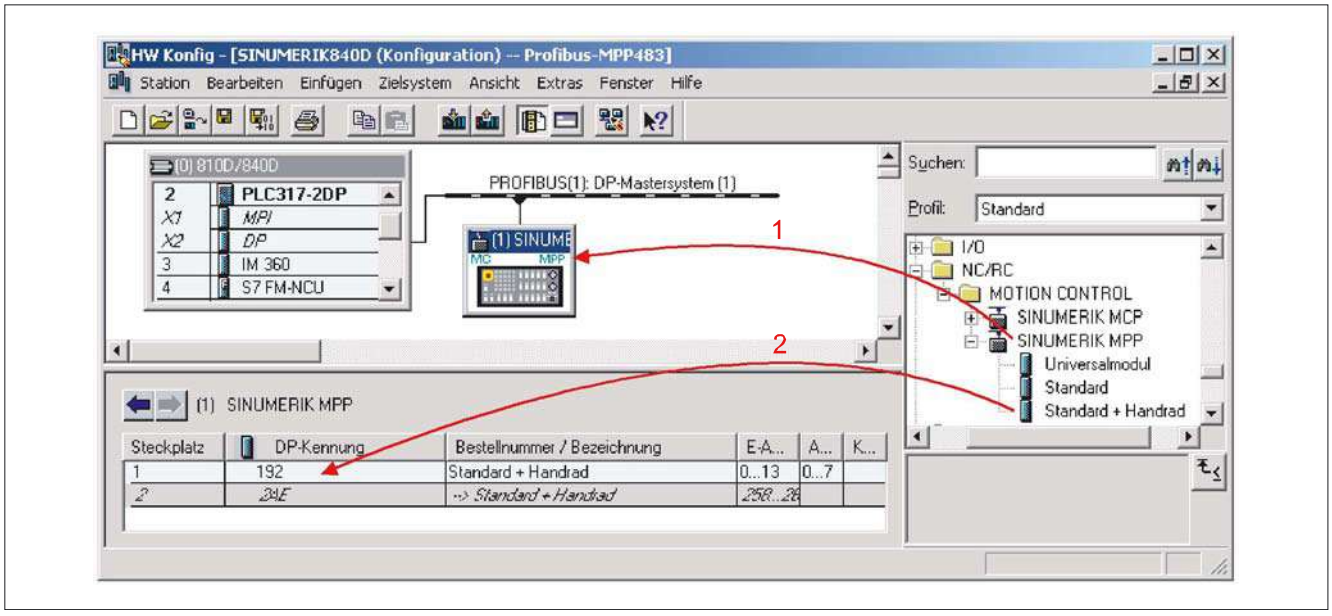

Figure 31-30 Configuring the DP slave MPP 483

Preconditions: S7 project

The following status is required for the S7 project to which the DP slave MPP is to be added:

- You have created the S7 project
- You have set up a SIMATIC 300 station with PROFIBUS master-capable SINUMERIK controller

Adding a DP slave MPP

To add a DP slave MPP to the configuration, open the hardware catalog using the menu command View > Catalog **View > Catalog**.

The DP slave MCP can be found at:

- Profile: **Standard**
  PROFIBUS–DP > Other field devices > NC/RC > Motion Control > SINUMERIK MPP

Click with the left mouse button on the DP slave MPP (SINUMERIK MPP) in the hardware catalog and drag it onto the DP master system in the station window by holding down the left mouse button.

The DP master system is displayed in the station window with the following symbol:



When you release the left mouse button, the DP slave MPP is added to the configuration.

Note

As you drag the DP slave the cursor appears as a circle with a slash through it.
When the cursor is positioned exactly over the DP master system, it changes to a plus sign, and the DP slave can be added to the configuration.

PROFIBUS parameters

Once you have added the DP slave MPP to the configuration, the "Properties - PROFIBUS interface SINUMERIK MPP" dialog box is displayed.

The following PROFIBUS parameters must either be set or verified:

- PROFIBUS address
- Data transfer rate
- Profile

Dialog

Dialog: Properties - PROFIBUS interface SINUMERIK MPP					
	Tab card: parameters				
		Address: **<PROFIBUS address>** Button: “Properties...”			
			Dialog: Properties – PROFIBUS		
				Tab card: Network settings	
					Data transfer rate: **12 Mbaud** Profile: **DP**
			OK		
OK					

Note

The PROFIBUS address of the DP slave MPP set in the S7 project must match the PROFIBUS address set on the module (coding switch S3) (see Section: "Initialization")

There is **no automatic adjustment!**

The following data must agree:

1. SIMATIC S7 configuration of DP slave MPP
PROFIBUS address

2. Machine control panel MPP 483
PROFIBUS address (coding switch S3)

Adding a module

The active functions and hence the number of user data elements to be transferred are chosen by selecting the appropriate pre-configured module. The modules in the hardware catalog are positioned below the DP slave MPP. The following modules are available:

- *Universal module* (not applicable)
- Standard
- Standard, handwheel

Module: Standard

The module transfers the data for the "Standard" function:

- Input data: 14 bytes

Standard data (14 bytes)

- Output data: 8 bytes

Standard data (8 bytes)

Module: Standard, handwheel

The module transfers the data for the "Standard" and "Handwheel" functions:

- Input data: 18 bytes

Standard data (14 bytes)	Absolute value 1st handwheel (2 bytes)	Absolute value 2nd handwheel (2 bytes)
Low byte		High byte

- Output data: 8 bytes

Standard data (8 bytes)

Setting the I/O addresses

If you add a module to slot 1 of the DP slave MPP, the input/output addresses are automatically assigned by STEP 7.

Double clicking with the left mouse button on a slot opens the "Properties - DP slave" dialog box. The starting addresses for the I/O data for the slot can be set here.

31.8.2.3 PLC user program

If an MPP is connected via PROFIBUS DP, the basic PLC program does not check for module failure.
In this case the MPP is monitored by a standard mechanism to monitor the active DP slave:

- PLC operating system
- PROFIBUS controller

If a failure of a DP slave MPP is detected, the PLC defaults to STOP.

Customized response:

The following organization blocks can be added to the PLC user program to customize the response to a DP slave MPP failure:

- OB 82: Diagnostics interrupt

- OB 86: Rack failure

Please refer to the corresponding SIMATIC literature for details of linking organization blocks and evaluating diagnostic data.

Note

In the event of the failure of a machine control panel connected via OPI/MPI, the following alarm is triggered by the basic PLC program:

• Alarm "40026x machine control panel (x+1) failure"; with x = 0, 1

If the machine control panel is being operated as a DP slave, the user (machine manufacturer) is responsible for triggering a corresponding alarm.

31.9 Technical specifications

31.9.1 MPP 483

Safety					
Safety class	III; PELV acc. to DIN EN 60204-1				
Degree of protection in accordance with DIN EN 60529	Front: IP54			Rear side: IP10A	
Certificates and approvals	CE / UL				
Electrical data					
Input voltage	24 V DC				
Power consumption, max.	Flat modules 12 W	Lamps LED 8.8 W	Handheld unit 12 W	Handwheels 2 x 0.9 W	Total 35 W
Fuse to be added	10 A				
Mechanical data					
	Dimensions (mm)				Weight
	Height	Width	Depth (front)	Mounting depth	
MPP 483	155	483	60	140 / 105 *)	Approx. 3 kg
MPP 483 L	244	483	60	140 / 105 *)	approx. 4.5 kg
Mechanical ambient conditions					
	Operation			**Transport** (in product packaging)	
Vibration stressing	10 – 58 Hz: 0.15 mm 58 – 200 Hz: 2g 3M6 according to EN 60721-3-3			2 – 9 Hz: 3.1 mm 9 – 200 Hz: 1g 2M2 according to EN 60721-3-2	
Shock stressing	5g, 30 ms, 18 shocks 3M4 per EN 60721-3-3 (limitation by relay on HGA)			30g, 6 ms 18 shocks 2M2 per EN 60721-3-2	
Climatic environmental conditions					
Cooling	By natural convection				
Condensation, spraying water and icing	Not permitted				
Air inlet	Without caustic gases, dusts and oils				
	Operation			**Storage/shipping** (in transport packaging)	
Applicable standards	EN 60721-3-3			EN 60721-3-1 / -3-2	
Climate class	3K5				
Temperature limits	0 ... 45 ºC (at front) 0 ... 55 ºC (at rear)			-20 ... 60 °C	
Temperature change	Max. 10 K/h			Max. 18 K/h	
Limits for relative humidity	5 ... 80%			10 ... 95%	
Permissible change in the relative air humidity	max. 0.1% /min				
*) when using a Profibus adapter					

31.9.2 Input/output interface of individual wiring

Button contact maker

Table 31-38 Contacts with floating outputs S1 to S4; S7 to S10 (NC contact or NO contact)

		AC	DC
Rated insulation voltage	Ue	50 V	50 V
Rated operating current	Ie	2 A	
Rated operating current at 24V	Ie		2 A
Min. rated operating current at 5 V	I_{min}		1 mA
Volume resistance			< 20 mΩ
Switching capacity		10 Ie	1.1 Ie
max. operating current for reference potential, roots, individual contacts		8 A	8 A

Selector switch

Table 31-39 Contacts with floating outputs WS1 / 9–11, 13, 15

		AC	DC
Rated operating voltage	Ue	300 V	300 V
Switching capacity with resistive load		10 A	
Switching capacity with inductive load		>2 A	
Switching capacity at 24V with resistive load			10 A
Switching capacity at 24V with inductive load			6 A
Rated values for arc-free switching at 24 V		0.3 A	0.22 A

Emergency stop button S13

SR mushroom-head button S61

Selector switch S11

Table 31-40 Contacts with floating outputs

	Usage category (EN 60947-5-1)		AC	DC
Rated operating voltage		Ue	24 V	24 V
Switching capacity	AC–12	Ie	10 A	
	AC–15	Ie	6 A	
	DC–12	Ie		10 A
	DC–13	Ie		3 A
Min. rated operating current at 5 V		I_{min}		1 mA
For further parameters, see pushbutton and indicator light SIGNUM 3SB3				

Inputs

The inputs are opto-decoupled.

Table 31-41 Extension keys S51 ... S62, S14, S15
emergency stop input S13

state		Voltage switched	Comment
Amount	15		Input characteristics curve following IEC61131, type 1
H signal	Nominal value	+ 24V DC	
	Signal level	+15 V to +30 V	)
L signal	Nominal value	0 V or open	
	Signal level	–3 V to +5 V	
In a group of	1		
Length of cable	max. 50 m AWG 16		
Encoder power supply		18.5 V to 30 V	

LED outputs

Table 31-42 LED-S51 ... LED S61
LED-S14 ... LED-S15
LED emergency stop HS13

state		Voltage switched	Current switched
Amount	14		
Load voltage 2P24		20.4 V ... 28.8 V	
Nominal value		+24V DC	0.5 A
H signal	Signal level min.	Ue - 0.16V	max. 0.7A / output
L signal	Max. signal level	2V (idling)	0.3 mA
Short-circuit protection	yes		
Typ. activation threshold			1.1 A
Eff. short circuit current			0.5 A
Galvanic isolation	no		
In a group of	1		
Output total current			max. 3 A
Length of cable	max. 50 m AWG 16		

Handheld unit connection XS12

The currents depend on the connected handheld unit.

The internal connecting cables of the handheld unit connection HT 6 are designed for a rated voltage of 24V DC and 2 A.

The internal connecting cables of the handheld unit connection HT 8 are designed for a rated voltage of 24V DC and 0.5 A.

31.10 Spare parts

Contact your Siemens service center to order replacement parts.

31.11 Accessories

31.11.1 Overview

Numerous accessories are available for the MPP 483.
Contact your Siemens service center to order accessories.

31.11.2 Labeling the slide-in labels

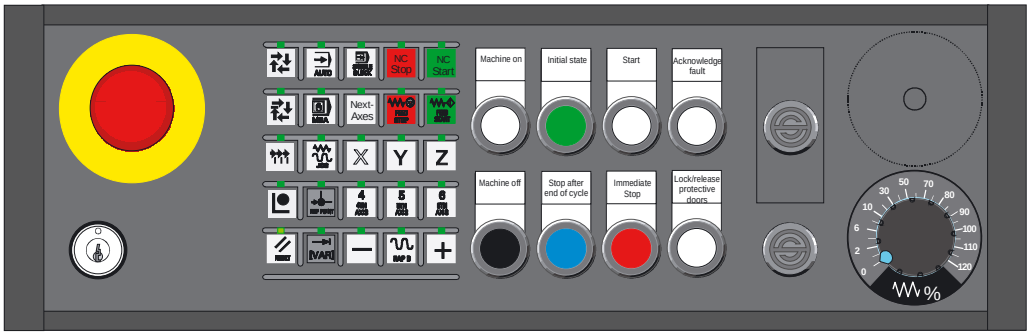

Figure 31-31 MPP 483 pushbutton panel

The figure shows the MPP 483 in the standard version.
The same slide-in labels can be used for the MPP 483H and the MPP 483A.

You can create your own slide-in labels in order to change the key labels. A printable blank film (DIN A4) is supplied with the panel for this purpose.

A spare parts kit containing three blank films is also available (Item no.: A5E00414151).

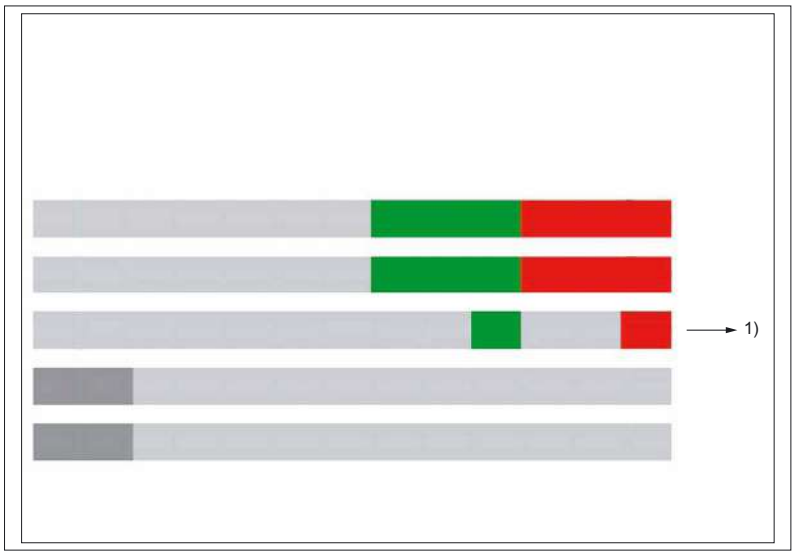

Figure 31-32 Blank film for MCP 483 film keyboard

1) Print direction

Files for printing the blank film

The DOConCD / Catalog NC 61 (CD enclosed) contains two files for printing the blank films:

- **Template_MPP483.doc** [assignment for standard variants of MPP 483 - **(A)**]
- **SymbolsMPP483.doc** [key symbols as Word file - **(B)**]

(A)

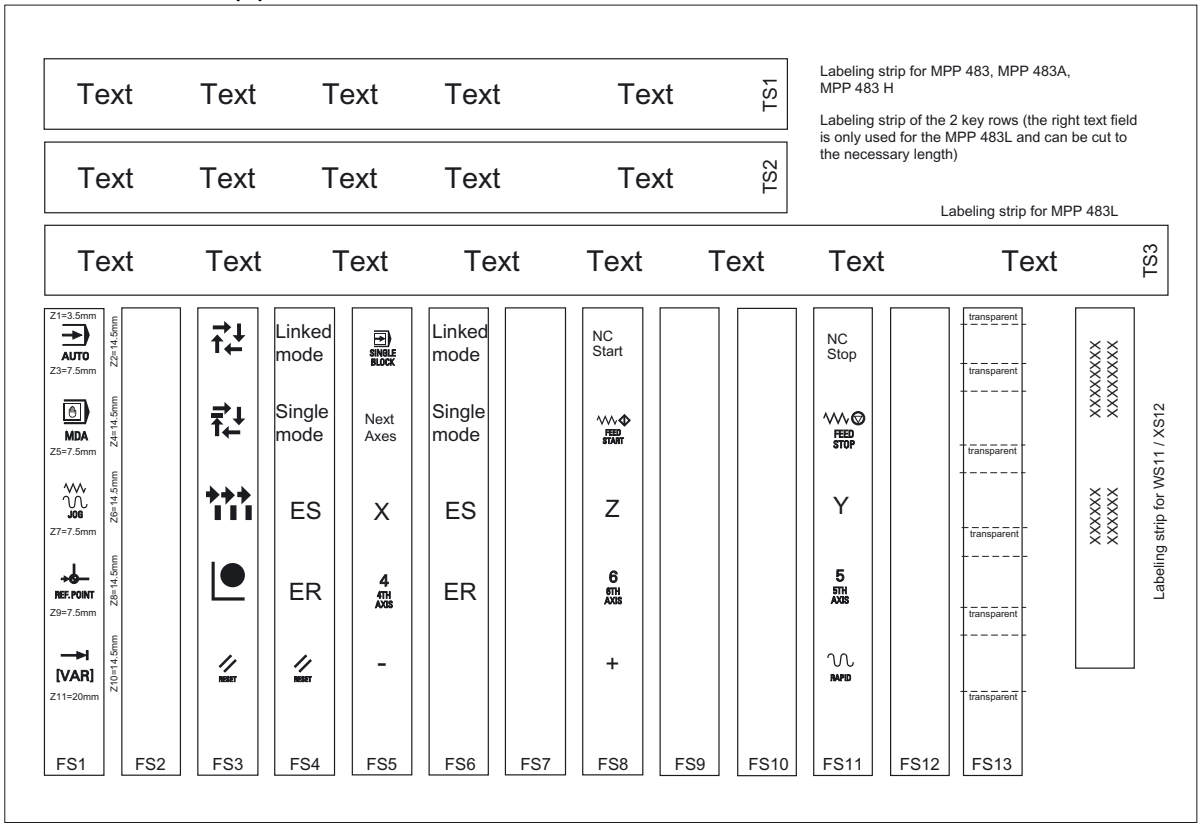

Figure 31-33 Template_MPP483.doc

(B)

Table 31-43 Symbols_MPP483.doc

JOG	REPOS	REF.POINT	[VAR]	SPINDLE DEC.	100%	SPINDLE INC.	MDA	TEACH IN	1
X	SPINDLE RIGHT	SPINDLE STOP	SPINDLE LEFT	AUTO	10	SINGLE BLOCK	RESET	100	CYCLE STOP
CYCLE START	Y	1000	WCS MCS	FEED STOP	FEED START	RAPID	Z	4 4TH AXIS	5 5TH AXIS
6 6TH AXIS	-	+	10000	SPINDLE START	7 7TH AXIS	8 8TH AXIS	9 9TH AXIS	+X	-X
+Y	-Y	+Z	-Z	+C	-C				
VK	EB	ES	ER	IO	SM	SS	SU	Next Axes	
NC Start	NC Stop								

Preparing standard slide-in labels with the aid of the file: "Template_MPP483.doc" (A)

1. Open the file "Template_MPP483.doc" in MS Word.
   The key symbols are arranged in a table on the position that corresponds to their location on the keyboard. The borders visible in the table are not printed.
2. Place the blank film in the printing direction in the slot of your laser printer (see figure: "Blank film for MPP 483 membrane keyboard").
3. Select "film" as the printable medium if your printer allows this setting.
4. Start the printing process using MS Word.

Note

Make a test print on paper before you print on the film.
Allow the film to cool after printing so that the ink can dry.

5. Cut the slide-in labels out of the film along the edges (outer lines).
6. Round off the corners of the labeling strips approx. 1.5 mm to facilitate insertion.
7. Slide in the printed slide-in label.
8. Shorten the labeling strip for the long-stroke keys for MPP 483 and MPP 483A, because only the first four text fields of the strips TS1 and TS2 are needed.

Preparing specific slide-in labels with the aid of the file: "Symbole_MPP483.doc" (B)

1. Open both the "Symbole_MPP483.doc" file and the"Template_MPP483.doc" file.
2. Copy the desired key symbol from the file "Symbole_MPP483.doc".
3. Position the cursor in the desired field of the template (A), add the symbol and adjust its size accordingly by dragging it by the gripping points.
4. To move a symbol to a different position,
   - select the symbol,
   - cut it out and
   - add it into the desired table cell.
5. If all the symbols are positioned as desired, follow the instructions in Section: "Preparing standard slide-in labels with the aid of the file: "Template_MPP483.doc" as of point 2.

Note

Input of characters/text instead of symbols

Use the "Arial" font to format text. This font is comparable to the "Univers S57" font, used by Siemens for the key labeling.

Creating your own symbols

- Drawing in a vector program (e.g. Designer, Freehand, CorelDraw):
  - Draw a square 15 x 15 mm without frames, filled with the color white.
  - Place the graphic in the center of this square.
  - Group the graphic and square together and add this group to the file "Template_MPP483.doc".
- Drawing in an image editing program (e.g. Photoshop, Picture Publisher, Paint)
  - Create a square area (e.g. 100 x 100 pixels) filled with the color white.
  - Draw the graphic or add an image in the center of this square.
  - Copy the graphic and square and add them both to the file "Template_MPP483.doc".

31.11.3 Handwheel connection

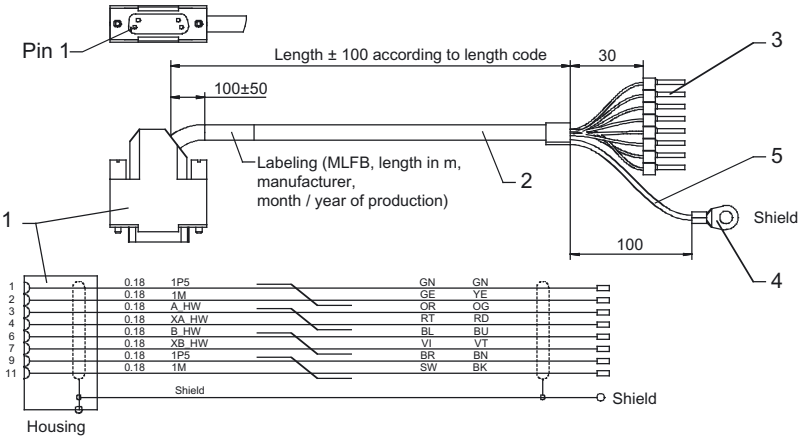

Explanation:

1 Signal connector	3 Pin-end connector, insulated	5 Flexible cable 0.75 mm2
2 Signal cable	4 Ring-end connector, insulated	

Figure 31-34 Connecting cable for COM board handwheel

Order no.: 6FX8002-2CP00-1xxx (xx is the length code: A = 0, B = 1 etc.)

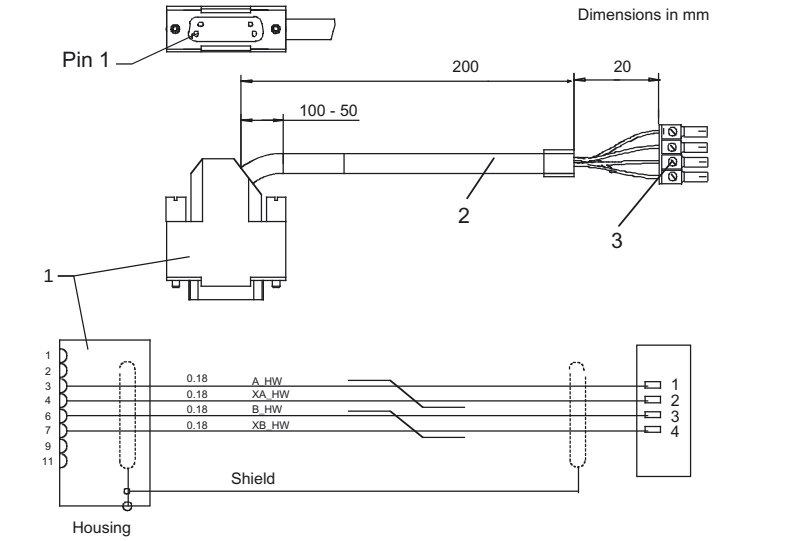

Explanation:

1 Signal connector	2 Signal cable	3 Signal connector, MC 1.5/4-ST-5.08, PHOENIX

Figure 31-35 Connecting cable for HHU handwheel

31.11.4 Retrofit control elements

You can retrofit the following control elements:

Function	Upper section actuator / accessories	Lower section contact block / signaling lamp	Mounting location	Usage
Signaling lamp	Illuminated nipple 28 mm ∅ RXJN-GB (yellow) RXJN-GN (green) RXJN-RT (red) RXJN-BL (blue) RXJN-KL (crystal clear) RXJN-WS (white)	AL5 lamp fixture with spot LED	S1 ... S4 S7 ... S10	Lamp
Button	Pushbutton 28 mm ∅ RXJN-GB (yellow) RXJN-GN (green) RXJN-RT (red) RXJN-BL (blue) RXJN-KL (crystal clear) RXJN-GWS (black)	Button contact maker AT2	S1 ... S4 S7 ... S10	For S1 1Ö internal 2S + 1Ö ext. For S2 ... S4, S7 ... S10 1Ö internal, 1S + 1Ö ext.
Illuminated key with fixture for T5.5K	Pushbutton 28 mm ∅ RXJN-GB (yellow) RXJN-GN (green) RXJN-RT (red) RXJN-BL (blue) RXJN-KL (crystal clear)	Illuminated button contact maker ATL2 with spot LED	S1 ... S4 S7 ... S10	For S1 1Ö internal 2S + 1Ö ext. For S2 ... S4, S7 ... S10 1Ö internal, 1S + 1Ö ext.
Spot LED		L5.5K28UW (white)	S1 ... S4 S7 ... S10	
Keyswitch switching angle of 90°, 2 positions	Safety lock cylinder 28 mm ∅ RXJSSA 15 E key can be removed when in both positions	Button contact maker AT2	S1 ... S4 S7 ... S10	For S1 1Ö internal 2S + 1Ö ext. For S2 ... S4, S7 ... S10 1Ö internal, 1S + 1Ö ext.
Keys / position selector	RX-JEWEL 22.3 mm Schlegel catalog	Button contact maker AT2	S1 ... S4 S7 ... S10	
Raised keys 6FC5247-0AA41-0AA0	2 RTAO pushbuttons with plunger elongation	2 AT2 special version	S1 ... S4 S7 ... S10	
Dummy plug	BVR22		S1 ... S4 S7 ... S10	
Selector switch	Knob FS1		WS1	Conversion to knob switch
Spindle / feed rate rapid traverse override		MLFB 6FC5247-0AF12-1AA0 6FC5247-0AF13-1AA0 6FC5247-0AF14-1AA0	 WS3 WS2 WS5	
Emergency stop	Switching element: 2 NC contacts	3SB3400-0E	S13	Extension NC contact EMERGENCY STOP
	Protective shroud for front plate mounting	3SB3921-0AK	S13	Protection against coming loose by accident
Control and signaling devices		3SB3 following selection from NSK catalog at A&D CD	S51 ... S62 S14, S15	all elements marked with LE

Function	Upper section actuator / accessories	Lower section contact block / signaling lamp	Mounting location	Usage
EKS	Serial port	EKS-A-ISX-G01-ST09/03	S14	Euchner identification system
	PROFIBUS DP interface	EKS-A-IDX-G01-ST09/03		
	USB interface	EKS-A-IUX-G01-ST01		

Note

When assigning the colors for keys and pilot lamps to the corresponding functionality, observe the standard EN 60204 Part1 or VDE 0113 Part1, section "Pushbuttons/Colors."

31.12 Service information

Changing the lamps on illuminated keys

1. Use a screwdriver to pull the key cap forward and off.
2. Use lamp remover LZ5 to lever out the key carrier.
3. Change the lamp using service tool LZ5 or a suitable insulating tube
4. Reinstall the key carrier and key cap in reverse order.

Lamp remover LZ5 is not a SIEMENS product. It can be obtained from the Schlegel company.

Georg Schlegel GmbH & Co. KG

Am Kapellenweg	Phone.: 0 73 71 / 502-0
88525 Dürmentingen	Fax: 0 73 71 / 502 49
Germany	E-mail: info@schlegel.biz

Changing the lamps on pilot lamps

1. Use a screwdriver to pull the calotte and name bearing element forward and off.
2. Change the lamp using the lamp remover of service tool LZ5 or a suitable insulating tube
3. Reinstall the calotte and name bearing element.

NOTICE
When using LEDs, make sure that they are connected with the correct polarity (see Fig.: "Mounting position of LEDs" in section: "Mounting")

Mounting additional control elements

1. If necessary, unscrew the blank plug.
2. Place the contact maker on the socket and insert the lamp if required.
3. Insert pushbutton through front panel and screw on cap nut (by several turns).
4. Press pushbutton on contact maker. Note the position of the twist protection device!
5. Screw down cap nut (tightening torque 0.8 Nm).

Insert slide-in labels

1. Create the slide-in label (see Section: "Accessories" → "Labeling the slide-in labels").
2. Pull protective films off slide-in slot.
3. Guide in the slide-in labels (labeling facing operator side).
4. Align text in window.

Note

Slide in the labels when the MPP 483 operator panel front is not yet installed.

Changing a contact maker

1. Loosen cap nut off pushbutton until just in front of contact maker.
2. Pull the pushbutton and the contact maker approximately 3 mm out of the fixture (the locating pin of the pushbutton must be freed).
3. Remove the LED.
4. Change the contact element, remove defective contact maker from fixture and press new contact maker onto fixture.
5. Insert pushbutton into aperture and partially screw on cap nut.
6. Press pushbutton on contact maker until it snaps in. Note the position of the snap nose!
7. Screw down cap nut (tightening torque 0.8 Nm).

Pushbutton panel: PP 012

32

32.1 Description

32.1.1 Overview

Machine control panel for machine tools in conjunction with the control systems 810D, 840D, S7-300 and FM-NC.

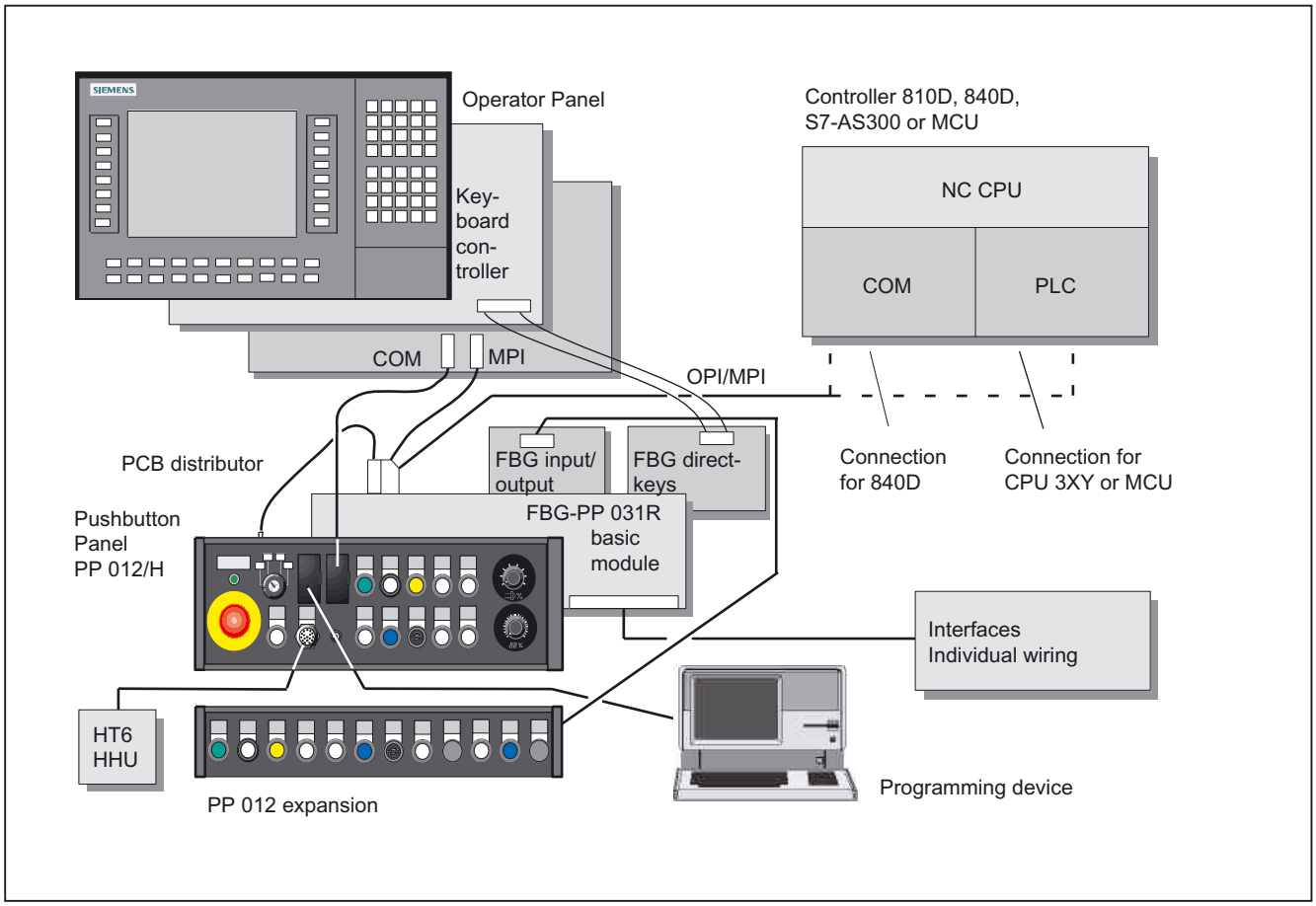

Figure 32-1 Pushbutton panel PP 012 in example configuration

Structure

The PP 012 consists of

- the basic module
- the distributor
- the direct keys
- the frontplate.

The basic module can be equipped with a handheld unit connection and/or additional inputs/outputs as options.

Communication

The distributor module is connected to the control system via the MPI interface.

Flexibility

- 10 control devices can be installed, depending on the current requirements
- 4-stage mode selector switch
- A programming device can be connected to the front panel, COM connection
- Selector switch for speed/rapid traverse and feedrate override
- Handheld unit connection with jumpering pushbutton
- 16 inputs for direct keys
- PCB_IO as an option, scanning up to 14 individual keys or 120 keys in a matrix, control of a maximum of 16 lamps

32.1.2 Interfaces and monitoring

MPI/OPI interface

The PP 012 is connected to the appropriate control system via the MPI/OPI interface. DIP switches allow you to select a parameter set from three possible variants (see Section: "Initialization", tables under "communication parameters" and "global data table").

PU interface

Data and control signals correspond to the OPI. Handheld programming devices require an external 24V power supply for operation.

The interface is not supplied with an external 5V potential (P5.EXT).

COM interface

Carries the signals from the COM interface of the operator panel to the PP 012.

Inputs/outputs in the control system

60 inputs and 26 outputs are assigned functions by the PP 012. The transmission is word by word.

Voltage supply

24V input voltage

Monitoring

PP 012 has monitoring LEDs for service and start-up:

- Voltage monitoring (POWER ON > 4.7 V)
- Temperature monitoring (activate > 60 °C; shutdown < 55 ±3 °C)
- OPI LED flashes during data transfer
- Bus request Repeater Segment 1
- Bus request Repeater Segment 2

32.1.3 Operator panel front interface

Inputs for customer-specific wiring

The printed circuit board distributor has three isolated inputs.

EMERGENCY STOP chain

When the EMER STOP button is activated, the EMERGENCY STOP chain will ensure personal safety and protect the machine in hazardous situations. The EMERGENCY STOP chain is also active when the handheld units are removed. The Emergency Stop button can be jumpered on the handheld unit by pressing S11 when the handheld unit is plugged/removed.

This is necessary to prevent the EMERGENCY STOP chain from being interrupted.

Note

To effectively deal with a possible malfunction of the WS11 override selector switch (e.g. jamming), the user PLC program must generate EMERGENCY STOP when a monitoring time (approximately 5 min) expires (see Fig in section: "Handheld unit connection" → "Enabling function, 2-channel" and Figure "Button S11 with PLC function" in Section: "Circuits and wiring").

Actuation elements

The actuating elements S1 to S4, S7 to S10, S14 and S15 are connected to the control system via the MPI/OPI. In addition, they have isolated contacts (common root) for custom-made wiring.

Lamps

The lamps HS1 to HS4, HS7 to HS10, HS14 and HS15 are connected to the control system via MPI/OPI. Alternatively, they can also be controlled from external non-isolated contacts.

EMER STOP switch and mode selector switch

Are also connected to the control system via MPI/OPI and have isolated contacts for custom-made wiring.

32.1.4 Function blocks

PP 012

- Interface/CPU/monitoring
- Distributor with repeater
- Handheld unit connection XS12
- I/O connection X20, X21
- Direct control key connection X19
- Interconnecting cable COM X26
- 4-stage mode selector switch WS1
- Feed override WS2
- Speed/rapid traverse override WS3

- Max. 12 control devices, one of them an Emergency Stop button S13 and a jumper button S11
- Max. 10 pilot lamps that can be controlled either from PLC or externally
- Inputs for configuring global data (GD) (DIP switches)
- Isolated operator panel front interface X15 with additional programming device interface X16
- DIP switches for generating S16, S17, S18 (baud rate, node address)
- Power Supply

PCB input/output

- 16 isolated outputs for controlling lamps, four of them optional (key matrix option)
- 14 isolated inputs for scanning individual keys/switches
- Key matrix option - up to 120 keys can be scanned
- Short-circuit-proof 24V output for external keys
- Matrix keys momentary-contact

PCB direct keys

- 16 isolated inputs for scanning the direct keys from the operator panel.

Block diagrams

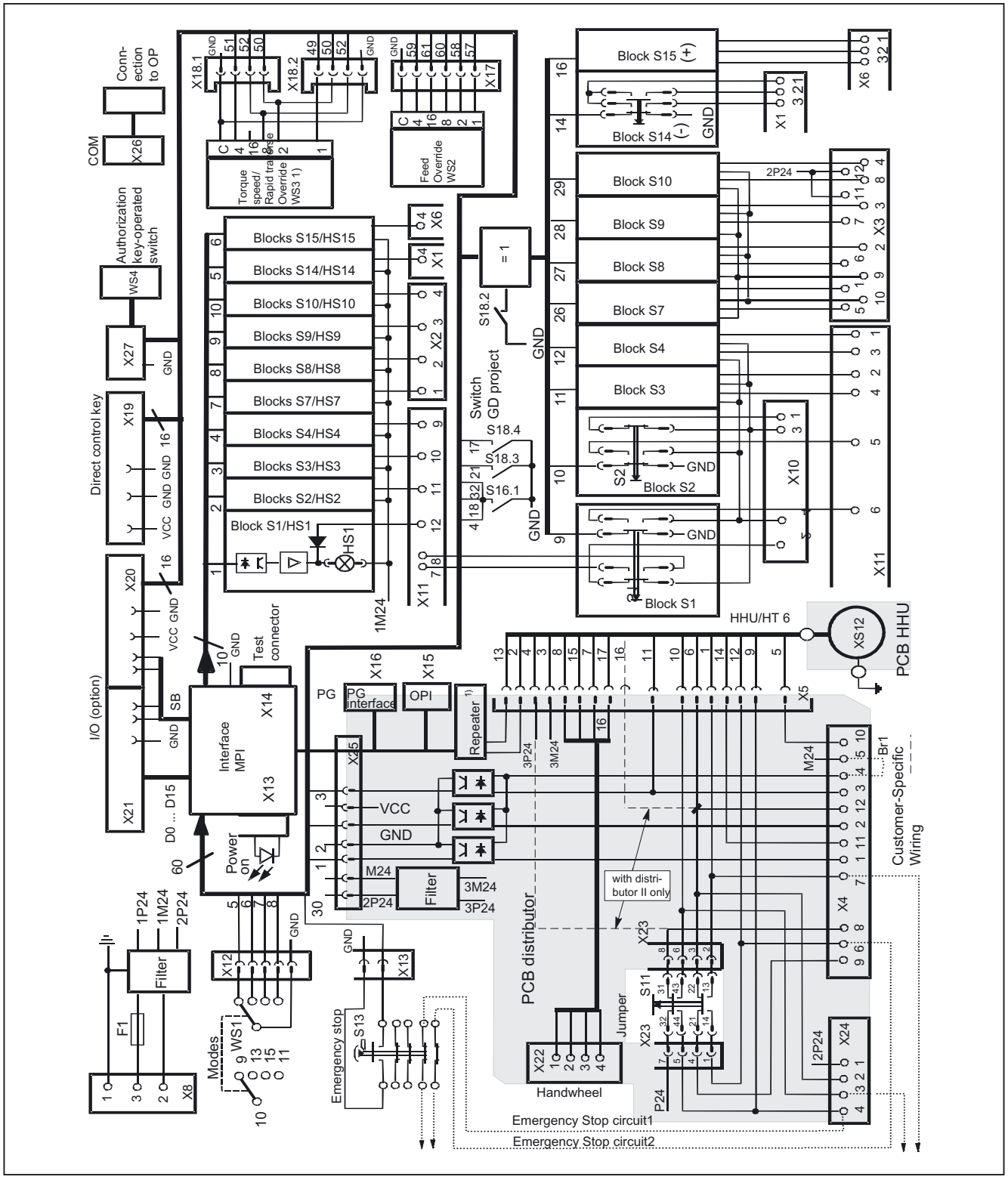

Figure 32-2 Block diagram of PP 012

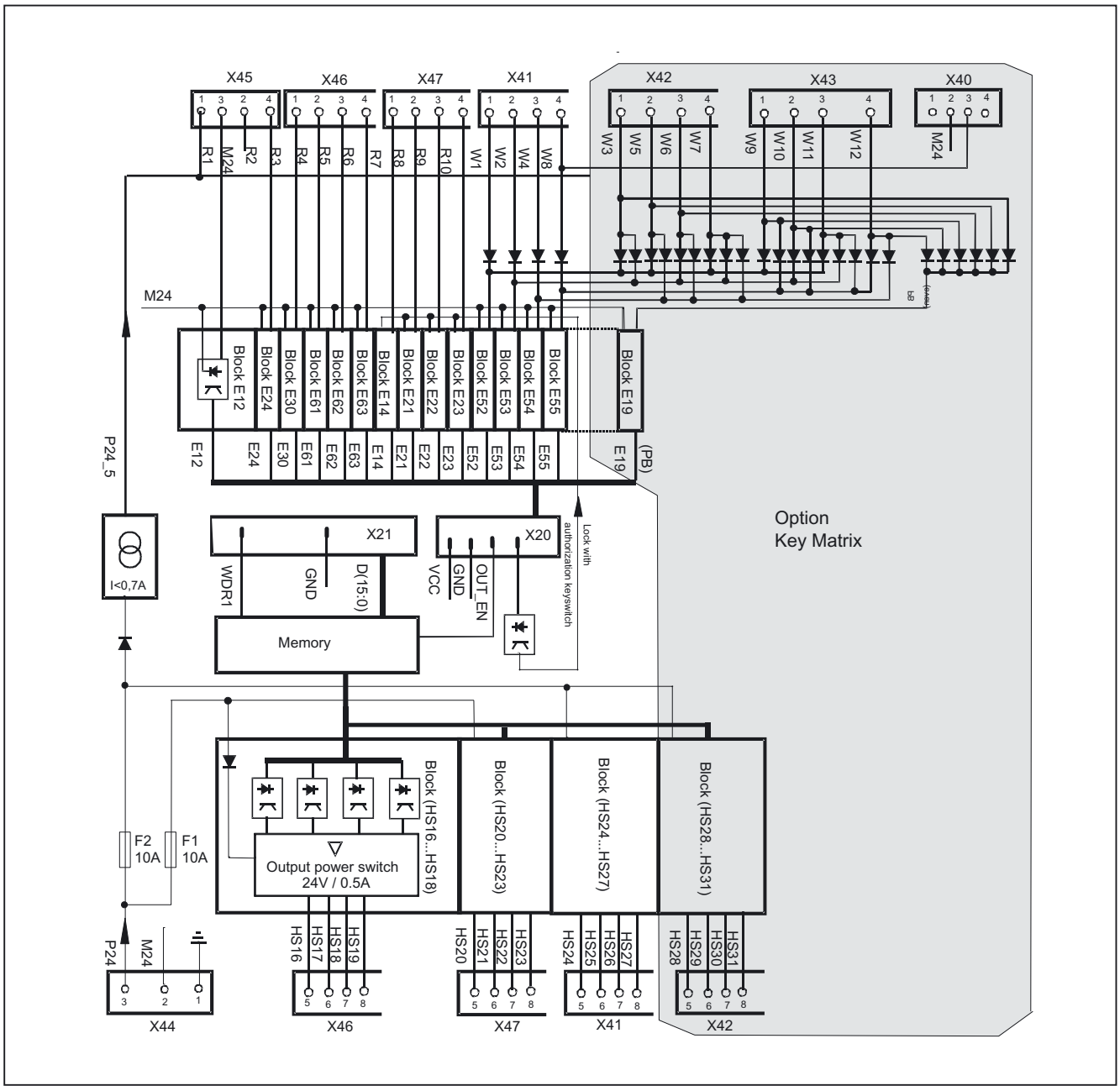

Figure 32-3 Block diagram of PCB expansion card 12E/12A

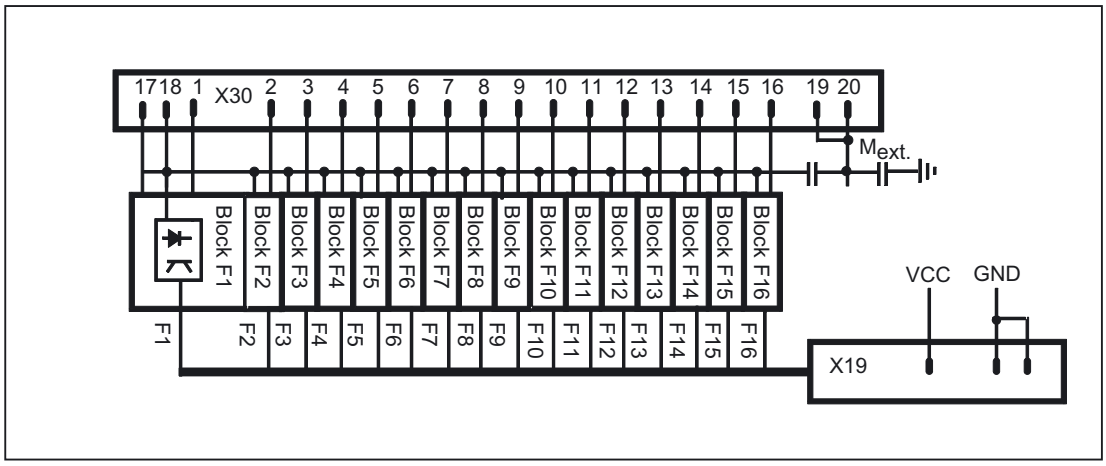

Figure 32-4 Block diagram of PCB direct keys PP 012

32.2 Operator controls and indicators

32.2.1 View

Arrangement of the control elements

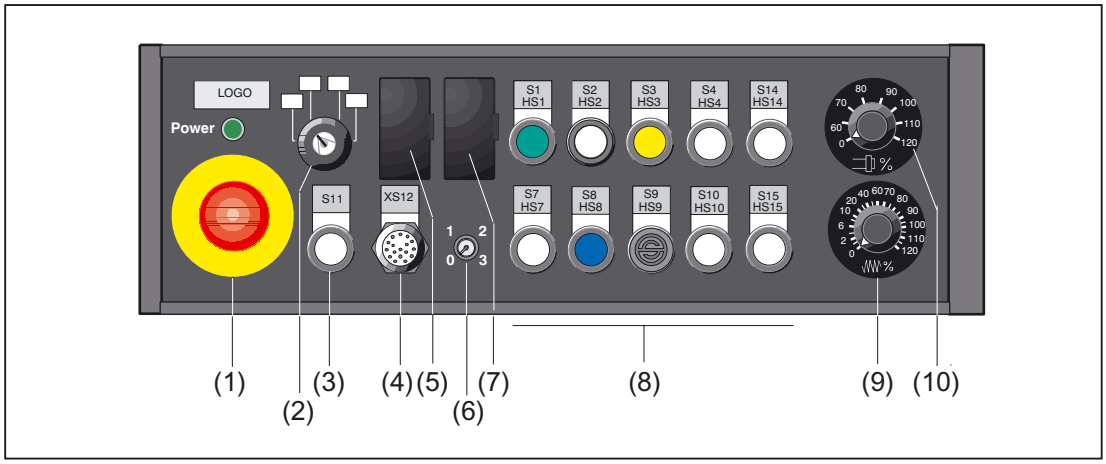

(1)	S13	EMERGENCY STOP key
(2)	WS1	Selector switch
(3)	S11	Jump key
(4)	XS12	Connection for handheld units
(5)	X16	PG connection
(6)		Key-operated authorization switch (on request)
(7)	X26	COM connection
(8)		Variably fitted control devices
(9)	WS2	Feedrate override
(10)	WS3	Speed/rapid override

32.2.2 Description

EMERGENCY STOP key

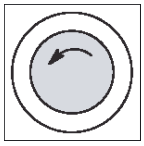

Emergency stop button
Press the red button in emergencies when

- people are at risk,
- there is the danger of machines or the workpiece being damaged.

As a rule, when operating the EMERGENCY STOP button, all drives are brought to a standstill with max. braking torque.

Turn the EMERGENCY STOP button counterclockwise to unlatch it.



Machine manufacturer
For other reactions to the EMERGENCY STOP:
refer to the machine tool manufacturer's instructions

Power

Displays power supply, lights green when controller operating voltage > 4.7 V

Selector switch

- 2-way, 4 stages, 60° switching angle
- Centrally mounted with front ring
- Designed as keyswitch CG4-1A251-600 *FS1 V750D/2J
  Can be changed by customer as knob switch variant FS1
- Key can be removed in all positions

Note

When used as a mode selector switch, the keyswitch should be used according to Guideline 89/392/EEC.

Variably fitted actuating elements

- In slots S1 to S4, S7 to S10, S14 and S15, control devices can be installed as per the table in Section: "Configuration" → "Project-specific components".
- Function and contacts see "block diagram PP 012" in Section: "Description" → "Function Blocks".
- Pushbutton S11 (designed as a jumper button) is provided with a sealing cap. This prevents the pushbutton from being locked easily.
- To effectively deal with a possible malfunction of the WS11 override selector switch (e.g. jamming), the user PLC program must generate EMERGENCY STOP when a monitoring time (approximately 5 min) expires (see Fig in section: "Handheld unit connection" → "Enabling function, 2-channel" and Figure "Button S11 with PLC function" in Section: "Circuits and wiring").

32.2.3 Labeling

Device front

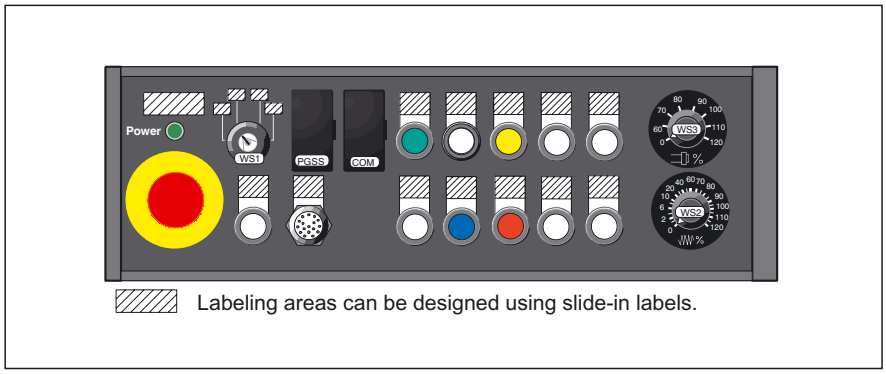

Figure 32-5 Control panel (example)

Dimensions for labeling the slide-in labels

The following drawing is intended purely as an example; multiple slide-in labels can also be arranged.

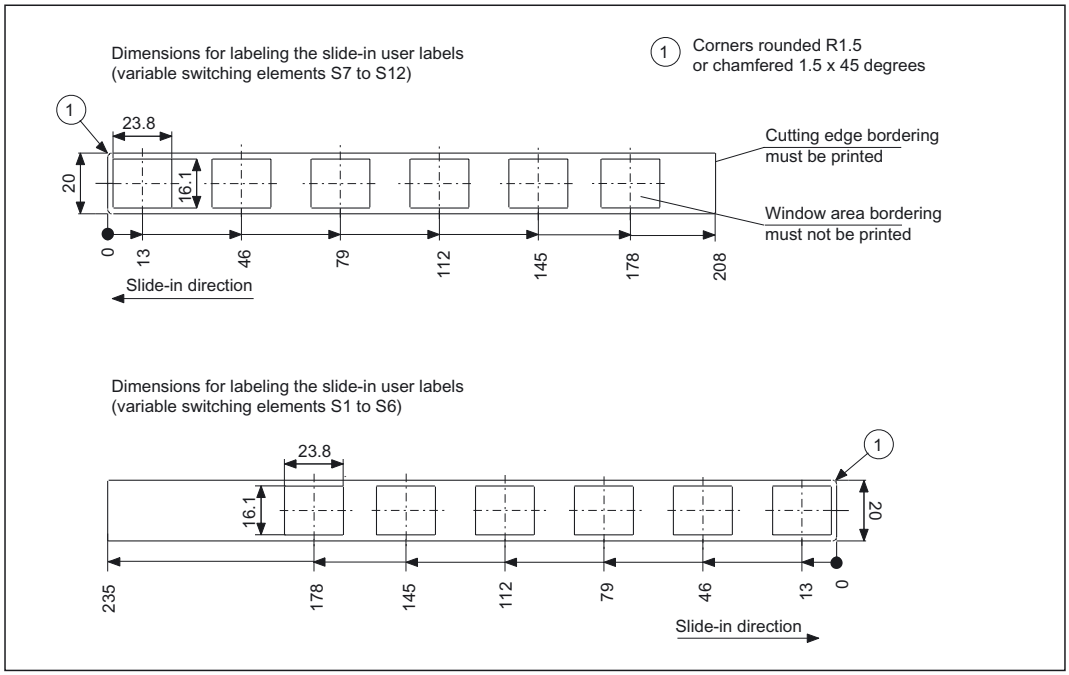

Figure 32-6 Dimensions for texts on the slide-in labels

Device rear side

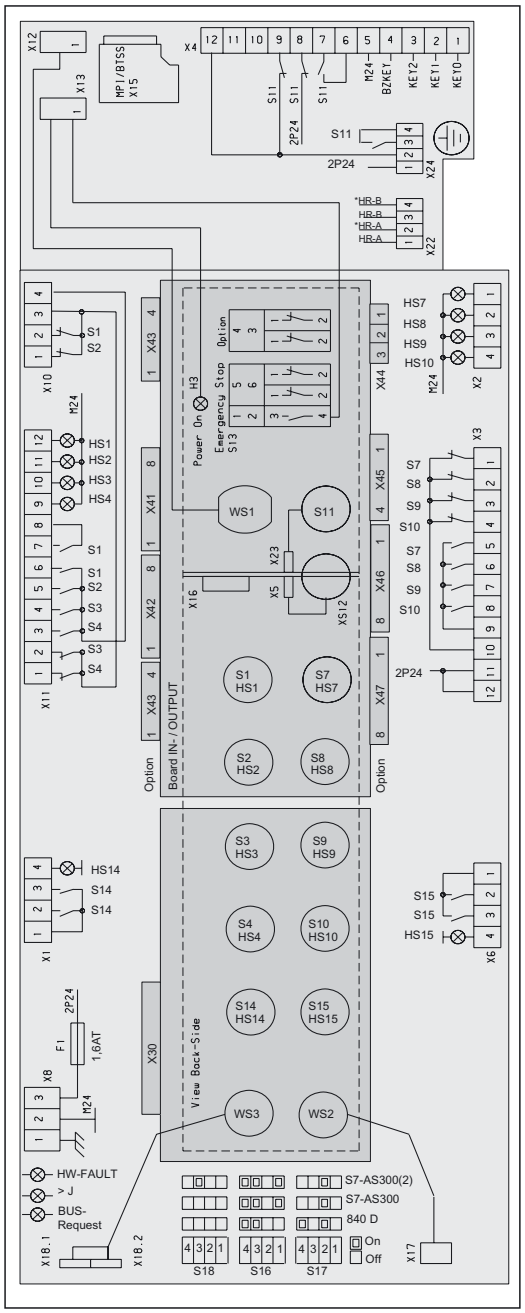

Figure 32-7 Labeling on rear of device

32.3 Interfaces

32.3.1 Overview

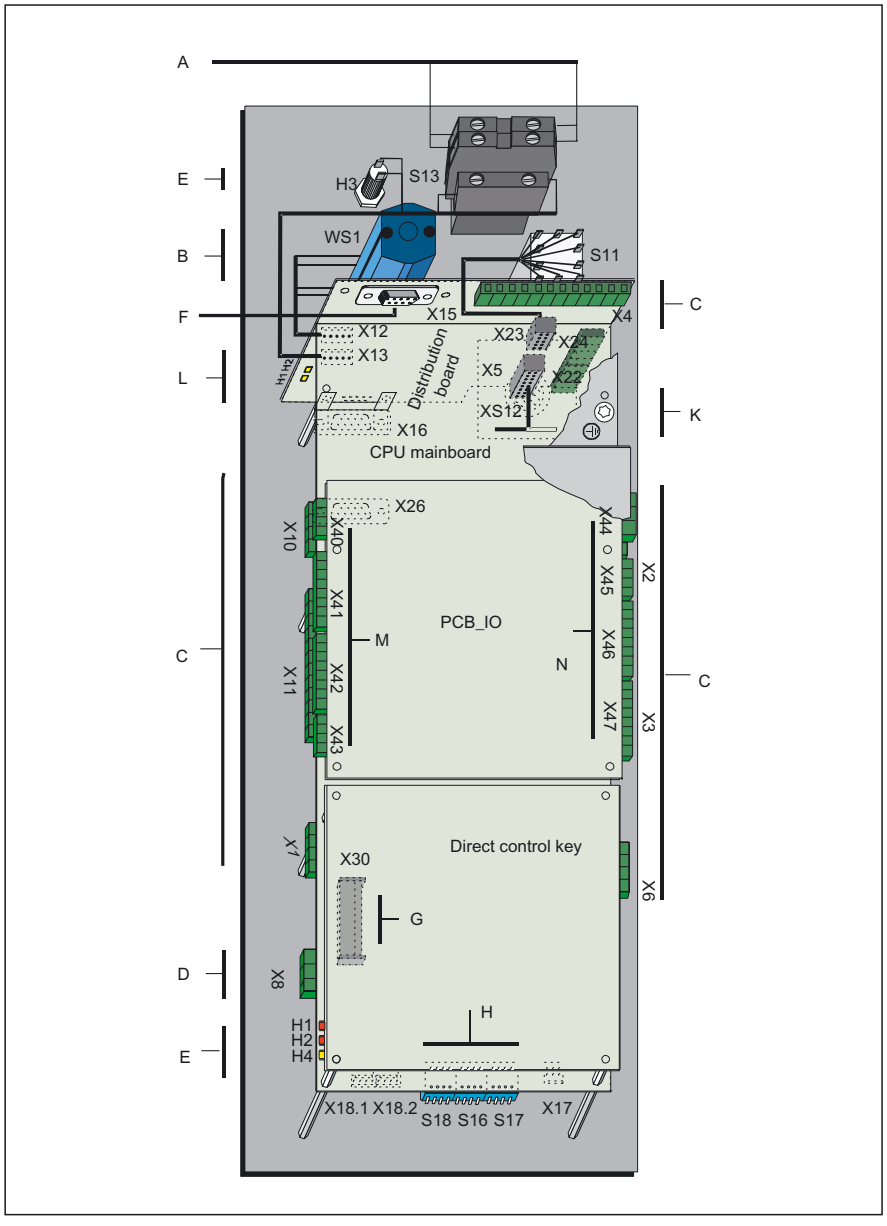

Figure 32-8 Device rear side

A	S13	EMERGENCY STOP key
B	WS1	Selector switch
C	X1 to X4, X6, X10, X11, X22 and X24:	
		Input/output interface of individual wiring
D	X8	24 V power supply
E	LED-basic module H1 .... H4	
	H1	not used
	H2	Overtemperature
	H3	Power On
	H4	SEND: Status change on protocol transmission
F	X15	Operator Panel Interface socket: 9-pin Sub-D socket connector, straight
G	X30	Direct control key connection
H	S16, S17, S18	DIP switch, see table in Section: "Initialization" → "Jumpering"
K	Connection for equipotential bonding connector via screw connection M5	
L	LED distributor	
	H1	Bus segment 1
	H2	Bus segment 2
M (GND)	X40 ... X43	Connection PCB_IO keyboard matrix/lamps
N	X44	24 V power supply
	X45 ...X47	Connection PCB_IO single contacts/lamps

NOTICE
When using the key-operated authorization switch, the inputs X47 are assigned: 1 ... 4. It cannot be used in this case to scan keys on the extension panel at X47.

Signal type

O	Outputs
I	Inputs
I/O	Bi-directional signals
V	Power supply

Emergency button S3

Key designation: S13
Key type: Mushroom turn-to-set button 3SB3000-1HA20 with holder 3SB3000-1HA20 and 1x NO contact 3SB34000B (internal use) max. 4 x NC contacts

Table 32-1 Switching element: NC contact 3SB3400-0E

Pin	Signal	Type	Signal name	Function
1	OE_S13.x	I/O	NC contact S13.x EMERGENCY STOP	
2	BZ_S13.x		Reference potential S13.x	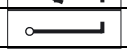

Selector switch interface WS1

Switch designation: WS1
Switch type: CG4–1 A251–600 ΣFS1 V750 D/2J (keyswitch)

Table 32-2 Selector switch interface

Pin	Signal	Type	Signal name	Switch position	Function
11	ER	I/O	Mode	4	
15	ES			3	
10	BZ_WS		Reference signal		
13	Single mode		Mode	2	
9	Linked mode			1	

32.3.2 PP 012 individual wiring

NOTICE

When PLC signals are linked with signals of the individual wiring, note that the signal change of the individual contacts may take place at different moments. Simultaneously opening and closing the contacts of a key within the actuating travel is not possible.

Connector X1

Connector X1: Direction -; Signaling lamp HS 14
Type: 4-pin Mini-Combicon MC 1.5/4-G-5.08

Table 32-3 Connector X1

Pin	Signal	Type	Signal name	Function
1	BZ_S14	I/O	Reference potential NO contact S 14	
2	S_S14.1		NO contact S14.1 - direction	
3	S_S14.2		NO contact S14.2 - direction	
4	HS 14	I	Signaling lamp HS 14	

Connector X2

Connector X2: Signaling lamps HS7 to HS10
Type: 4-pin Mini-Combicon MC 1.5/4-G-5.08

Table 32-4 Connector X2

Pin	Signal	Type	Signal name	Function
1	HS7	I	Pilot lamp HS7	All inputs "High" active
2	HS8		Pilot lamp HS8	
3	HS9		Pilot lamp HS9	
4	HS10		Pilot lamp HS10	

Connector X3

Connector X3: Contacts S7 to S10
Connector type: 12-pin Mini-Combicon MC 1.5/12-G-5.08

Table 32-5 Connector X3

Pin	Signal	Type	Signal name	Function
1	OE_S7	I/O	NC contact S7	
2	OE_S8		NC contact S8	
3	OE_S9		NC contact S9	
4	OE_S10		NC contact S10	
10	BZOE_S7-10		Reference potential NC contacts S7-10	
5	S_S7		NO contact S7	
6	S_S8		NO contact S8	
7	S_S9		NO contact S9	
8	S_S10		NO contact S10	
9	BZS_S7-10		Reference potential NO contacts S7-10	
11	2P24	V	+24 V potential	
12				

Connector X4

Connector X4: Euchner connection
Connector type: 12-pin Mini-Combicon MC 1.5/12-G-5.08

Table 32-6 Connector X4

Pin	Signal	Type	Signal name	Connection XS12 pin	Function
1	KEY 0	I	Input 1		
2	KEY 1		Input 2		
3	KEY 2		Input 3	11	
4	BZ_KEY		Reference spot. KEY0...2		
5	1M24	V	Ground 24V		
6	EMERGENCY STOP 2.2	I/O	EMER OFF CIRCUIT 2	12	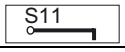
7	EMERGENCY STOP 2.1			1	
8	AUFR_RICHT		Direction call		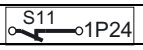
9	ZUST_TA		Enabling button	6 (via S11)	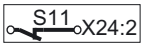
10	ZS1/ZS1.1 *)			5	
11	ZS2/ZS2.1 *)			14	
12	ZS Common / ZS 2.2 *)			6	

Connector X6

X6 Connector: Direction +; signaling lamp HS15
Connector type: 4-pin Mini-Combicon MC 1.5/4-G-5,08

Table 32-7 Connector X6

Pin	Signal	Type	Signal name	Function
1	BZ_S15	I/O	Reference potential NO contact S15	
2	S_S15.1		NO contact S15.1 + direction	
3	S_S15.2		NO contact S15.2 + direction	
4	HS 15	I	Singaling lamp HS 15	

Connectors X10/X11

Connectors X10/X11: Contacts S1 to S6; signaling lamps HS1 to HS6
Connector type X10: 4-pin Mini-Combicon MC 1.5/4-G-5,08
Connector type X11: 12-pin Mini-Combicon MC 1.5/12-G-5,08

Table 32-8 Connectors X10/X11

Connectors	Pin	Signal	Type	Signal name	Function
X10	1	OE_S2	I/O	NC contact S2	
	2	OE_S1		NC contact S1	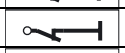
	3	BZOE_S1-4		Reference potential NC contact S1 S4	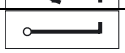
	4	BZS_S1-S6		Reference potential NO contact S1 S6	
X11	1	OE_S4	I/O	NC contact S4	
	2	OE_S3		NC contact S3	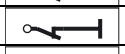
	3	S_S4		NO contact S4	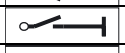
	4	S_S3		NO contact S3	
	5	S_S2		NO contact S2	
	6	S_S1.1		NO contact S1.1	
	7	BZS_S1.2		Reference potential NO contact S1.2	
	8	S_S1.2		NO contact S1.2	
	9	HS 4	I	Pilot lamp HS4	All inputs "High" active
	10	HS 3		Pilot lamp HS3	
	11	HS 2		Pilot lamp HS2	
	12	HS 1		Pilot lamp HS1	

Connector X22

Connector X22: Hand wheel
Connector type: 4-pin Mini-Combicon MC 1.5/4-G-5,08

Table 32-9 Connector X22

Pin	Signal	Type	Signal name
1	HR_A	O	Handwheel track A
2	XHR_A		Handwheel track A negated
3	HR_B		Handwheel track B
4	XHR_B		Handwheel track B negated

Connector X24

Connector X24: EMERGENCY STOP circuit 1
Connector type: 4-pin Mini-Combicon MC 1.5/4-G-5,08

Table 32-10 Connector X24

Pin	Signal	Type	Signal name	Function
1	2P24	V	+ 24 V	
2	OE_S11 / ZS2.2 *)		NC contact S11	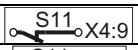
3	EMERGENCY_STOP 1.1		EMER OFF CIRCUIT 1	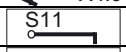
4	EMERGENCY_STOP 1.2			

Power supply interface X8

Connector X8: Power Supply
Connector type: 3-pin print terminal block MSTBA 2.5/3-G-5.08
Pin assignment: see section: "Connection conditions" → "Secondary electrical conditions"

Operator panel front interface (MPI) X15

Connector X15: Operator panel front interface (MPI)
Connector type: 9-pin Sub-D socket connector, screw locking UNC4/40

NOTICE
Use MPI bus connector 6FX2003-0AA02!

Max. cable length 200 m at 1.5 Mbaud

Table 32-11 Operator panel front interface (MPI) X15

Pin	Signal	Type	Signal name
1	N.C.		Unassigned
2	N.C.		Unassigned
3	RS	I/O	RS-485 data
4	ORTSAS	O	Output Request to Send, user interface
5	GND_EXT	V	5 V external ground
6	VCC_EXT		5 V external potential
7	N.C.		Unassigned
8	XRS	I/O	RS-485 data
9	IRTSPG		In Request to Send PG

Programming device interface (PD) X16

Connector X16:	Programming device interface (PD)
Connector type:	9-pin Sub-D socket connector, screw locking UNC4/40
Max. cable length	5 m

Table 32-12 Connector X16

Pin	Signal	Type	Signal name
1	N.C.		Unassigned
2	3M24	V	24 V reference potential
3	RS	I/O	RS-485 data
4	ORTSAS	O	Output Request to Send, user interface
5	GND_EXT	V	5 V external ground
6 / 7	N.C.		Unassigned
8	XRS	I/O	RS-485 data
9	IRTSPG		In Request to Send PG

The power supply potential P24 is not provided by PP 012. An external 24 V power voltage supply enables handheld programming devices 702 and 705. External terminals with a separate 5V power supply cannot be operated (fiber-optic technology).

Serial interface RS-232-C (COM) X26

Connector X26:	Serial interface (RS 232 C)
Connector type:	9-pin Sub-D socket connector, straight, screw locking UNC4/40
Max. cable length	25 m
Pin assignment:	see section: "Connection conditions" → "Secondary electrical conditions"

Handheld device interface XS12

Connector:	Handheld device interface XS 12
Connector type:	Euchner flanged connector RC-17S1NM2H3PW coding Y (315°)
Max. cable length	50 m

Table 32-13 Handheld device interface XS12

Pin	Signal enabling function	Type	Signal name	Function
1	EMERGENCY_STOP 2.1		Emergency Stop NC contact 2.1	EMERGENCY STOP
2	MPI_A	I/O	RS-485 data	MPI
3	3M24	V	Ground 24V	Power supply
4	3P24		+ 24 V	
5	ZS1.1		Agreement button	Enabling function
6	ZS2.2		Call enable key	
7	HR_B		Handwheel B	Handwheel
8	HR_A		Handwheel A	
9	EMERGENCY STOP 1.2		Emergency Stop NC contact 1.2	EMERGENCY STOP
10	EMERGENCY STOP 1.1		Emergency Stop NC contact 1.1	
11	KEY2	I	Key scanning No.3	Bridge jump plug
12	EMERGENCY STOP 2.2		Emergency Stop NC contact 2.2	EMERGENCY STOP
13	MPI_B	I/O	RS-485 data	MPI
14	ZS2.1		Agreement button	Enabling function
15	HR_XA		Handwheel A negated	Hand wheel
16	ZS1.2		NC / enabling button	Not assigned/ enabling function
17	HR_XB		Handwheel B negated	Hand wheel

Printed circuit board direct keys X30

Connector X30:	Printed circuit board Direct keys
Connector type:	Flat ribbon connector, plug connector, with protective shroud 20-pin 2-row with interlock

Table 32-14 Printed circuit board Direct keys

Pin	Signal	Type	Signal name
1	F1	I	Direct key 1
2	F2		DirectKey
3	F3		Direct key 3
4	F4		Direct key 4
5	F5		Direct key 5
6	F6		Direct key 6
7	F7		Direct key 7
8	F8		Direct key 8
9	F9		Direct key 9
10	F10		Direct key 10
11	F11		Direct key 11
12	F12		Direct key 12
13	F13		Direct key 13
14	F14		Direct key 14
15	F15		Direct key 15
16	F16		Direct key 16
17 / 18	P5_TAC	V	5 V keyboard controller
19 / 20	M_TAC		Ground of keyboard controller

The direct key module serves to connect the 16 direct keys of the operator panel.

32.3.3 Individual wiring PCB input/output

Connector X40

Type: 4-pole, Combicon base casing MC 1.5/4-G-3.81

Table 32-15 Printed circuit board input/output

Pin	Signal	Type	Signal name
1	P24_5	V	24V potential
2	M24		Ground 24V
3	E55/W8	I	Input key 55/matrix row 8
4	N.C.	-	Not assigned

Connector X41

Type: 8-pole, Combicon base casing MC 1.5/8-G-3.81

Table 32-16 Printed circuit board input/output X41

Pin	Signal	Type	Signal name
1	E52/W1	I	Input key 52/matrix row 1
2	E53/W2		Input key 53/matrix row 2
3	E54/W4		Input key 54/matrix row 4
4	E55/W8		Input key 55/matrix row 8
5	HS24	O	Connection of lamp HS24
6	HS25		Connection of lamp HS25
7	HS26		Connection of lamp HS26
8	HS27		Connection of lamp HS27

Connector X42

Type: 8-pole, Combicon base casing MC 1.5/8-G-3.81

Table 32-17 Printed circuit board input/output X42

Pin	Signal	Type	Signal name
1	W3	I	Matrix row 3
2	W5		Matrix row 5
3	W6		Matrix row 6
4	W7		Matrix row 7
5	HS28	O	Connection of lamp HS28
6	HS29		Connection of lamp HS29
7	HS30		Connection of lamp HS30
8	HS31		Connection of lamp HS31

Connector X43

Type: 4-pole, Combicon base casing MC 1.5/4-G-3.81

Table 32-18 Printed circuit board input/output X43

Pin	Signal	Type	Signal name
1	W9	I	Matrix row 9
2	W10		Matrix row 10
3	W11		Matrix row 11
4	W12		Matrix row 12

Connector X44

Type: 3-pole print plug-in terminal blocks M

Table 32-19 Printed circuit board input/output X44

Pin	Signal	Type	Signal name
1	Shield	I	Ground
2	M24	V	Ground 24V
3	P24		24V potential

Connector X45

Type: 4-pole, Combicon base casing MC 1.5/4-G-3.81

Table 32-20 Printed circuit board input/output X45

Pin	Signal	Type	Signal name
1	P24_5	V	24V potential
2	M24		Ground 24V
3	E12/R1	I	Input key 12 / matrix line 1
4	E24/R2		Input key 24 / matrix line 2

Connector X46

Type: 8-pole, Combicon base casing MC 1.5/8-G-3.81

Table 32-21 Printed circuit board inputs/outputs X46

Pin	Signal	Type	Signal name
1	E30/R3	I	Input key 30 / matrix line 3
2	E61/R4		Input key 61 / matrix line 4
3	E62/R5		Input key 62 / matrix line 5
4	E63/R6		Input key 63 / matrix line 6
5	HS16	O	Connection of lamp HS16
6	HS17		Connection of lamp HS17
7	HS18		Connection of lamp HS18
8	HS19		Connection of lamp HS19

Connector X47

Type: 8-pole, Combicon base casing MC 1.5/8-G-3.81

Table 32-22 Printed circuit board inputs/outputs X47

Pin	Signal	Type	Signal name
1	E14/R7	I	Input key 14 / matrix line 7
2	E21/R8		Input key 21 / matrix line 8
3	E22/R9		Input key 22 / matrix line 9
4	E23 / R10		Input key 23 / matrix line 10
5	HS20	O	Connection of lamp HS20
6	HS21		Connection of lamp HS21
7	HS22		Connection of lamp HS22
8	HS23		Connection of lamp HS23

Connector parts for I/O module

Connector PCB-IO	Signal MINI COMBICON connector part Grid 3.81		Connection	Phoenix item number
X40, X43, X45	MC 1.5/4-ST-3.81		Screw 1.5	1803594
	FRONT–MC 1.5/4–ST–3.81		Screw 1.5	1850686
	FK MCP 1.5/4-ST-3.81		Spring force 1.5	1851067
	Casing	MCC 1/4-STZ-3.81	Crimp	1852192
	Socket connector contact	MCC–MT 0.2...0.35 MCC–MT 0.5...1.0	Crimp 0.2 to 0.35 Crimp 0.5 to 1.0	1859988 1859991
X41, X42, X46, X47	MC 1.5/8-ST-3.81		Screw 1.5	1803633
	FRONT–MC 1.5/8–ST–3.81		Screw 1.5	1850725
	FK MCP 1.5/8-ST-3.81		Spring force 1.5	1851106
	Casing	MCC 1/8-STZ-3.81	Crimp	1852231
	Socket connector contact	MCC–MT 0.2...0.35 MCC–MT 0.5...1.0	Crimp 0.2 to 0.35 Crimp 0.5 to 1.0	1859988 1859991

Connector PCB-IO	COMBICON connector part Grid 5.08	Connection	Phoenix item nummer
X44	MSTBA 2.5/3-G-5.08	Screw 2.5	1779990

32.3.4 PLC interface

Input signals

Inputs	Bit 7	Bit 6	Bit 5	Bit 4	Bit 3	Bit 2	Bit 1	Bit 0
Word 0 Low	Operating mode				GD config.	Isolated inputs		
	WS1/4 ER	WS1/3 ES	WS1/2 Single mode	WS1/1 Linked mode	*) DIP - S16/1	X4/3 KEY2	X4/2 KEY1	X4/1 KEY0
Word 0 High	Direction +	I/O	Direction -		Variable keys			
	S15	E14/R7 Key switch 0	S14	E12/R1	S4	S3	S2	S1
Word 1 Low	I/O			GD config.	Version activation		GD config.	
	E23/R10S Key switch 3	E22/R9 Key switch 2	E21/R8 Key switch 1	DIP - S18/3	E19/PB (Parity)	High (reserve)	*) DIP - S16/1	DIP - S18/4
Word 1 High	GD config.	I/O	Emergency STOP	Variable keys				
	*) DIP - S16/1	E30/R3	S13	S10	S9	S8	S7	E24/R2
Word 2 Low	Direct control key							
	F8	F7	F6	F5	F4	F3	F2	F1
Word 2 High	Direct control key							
	F16	GD config. F15	F14	F13	F12	F11	F10	F9
Word 3 Low	I/O				Spindle speed/rapid traverse			
	E55/W8	E54/W4	E53/W2	E52/W1	D	C	B	A
Word 3 High	I/O							
	E63/R6	E62/R5	E61/R4	E	D	C	B	A

*) All bits identified with DIP-S16/1 are simultaneously switched when S16/1 is actuated.

Output signals

Outputs	Bit 7	Bit 6	Bit 5	Bit 4	Bit 3	Bit 2	Bit 1	Bit 0
Word 0 Low	Signaling lamps							
	HS8	HS7	HS15	HS14	HS4	HS3	HS2	HS1
Word 0 High	not assigned						Signaling lamps	
							HS10	HS9
Word 1 Low	I/O							
	HS23	HS22	HS21	HS20	HS19	HS18	HS17	HS16
Word 1 High	Option Key matrix on I/O					I/O		
	HS31	HS30	HS29	HS28	HS27	HS26	HS25	HS24
Word 2 Low	not assigned							
Word 2 High	not assigned							
Word 3 Low	not assigned							
Word 3 High	not assigned							

Legend:

	Signals high - active	S1... S4; S7... S10; S14; S15	High – active / Low– active, settable via S18.2 S18.2 closed = Low - active S18.2 open = High - active
	Signals low - active	Ex/HSx	I/O optional via clip-on card High - active

NOTICE

When the mode is switched over, "Low" can be output briefly for all signals on selector switch SW1!

I.e., all safety-relevant signals are linked such that they are only possible if switch WS1 has a defined position.

32.4 Mounting

The PP 012 (for dimensions, see dimension drawing) is secured by means of tension jacks (in delivery kit) to the rear of the front plate. Due to the surrounding seal located on the rear side, the frame profile complies with degree of protection IP65 when all 9 tension jacks are fastened.

Only IP54 can be achieved for the complete pushbutton panel, however, due to the installation of a keyswitch.

If necessary, the tension jacks (9 items) can be supplied as spare parts (Order No. 6FC5 248-0AF13-0AA0).

Dimension drawing

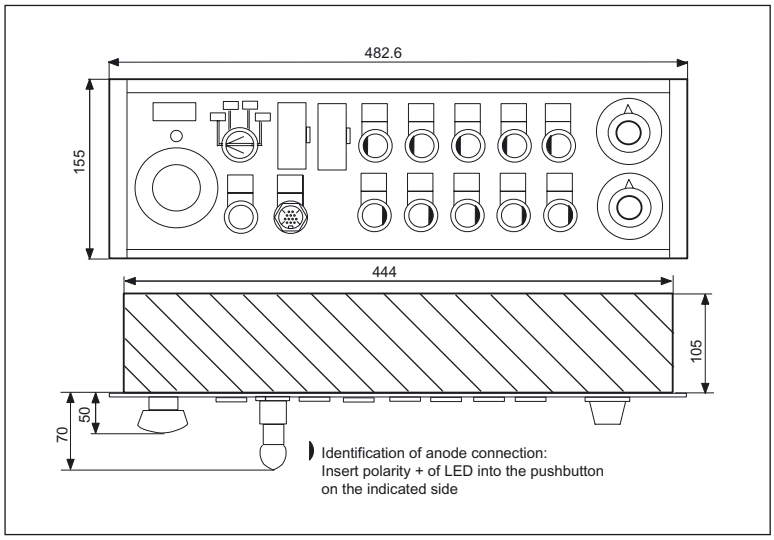

Figure 32-9 Dimension drawing of PP 012

Panel cutout

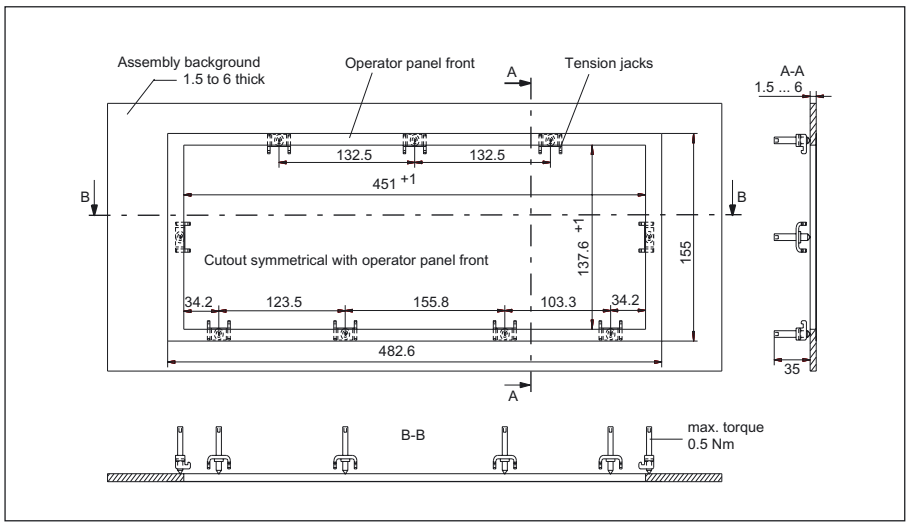

Figure 32-10 Panel cutout for PP 012

32.5 Connectors

32.5.1 PP 012

Connecting the 24V supply

The 24V power supply is connected via a 3-pole terminal block (see diagram "Rear side of Device" in Section: "Interfaces") at connector X8 on the rear of the MCP. The equipotential bonding conductor is fastened using an M5 screw and must be linked with the central ground standard part.

⚠DANGER
The 24V DC power supply must always be grounded and designed as "Protective Extra-Low Voltage" (PELV) - protection through function low voltage with safe isolation!

Connection of the MPI connector

The PP 012 is connected to the 840D or S7-300 control by means of an MPI bus line. The MPI connector is plugged into X15 on the rear of the PP 012 and fixed with a screw.

Individual wiring connection

Emergency stop button, selector switch and single contacts are connected according to the required customer-specific links.

(Function see diagrams in Section: "Circuits and wiring")

Supply voltages for inputs and outputs must always be grounded!

Note

A key-operated switch CG4-1A251-600 *FS1 V750D/2J must be used when using the actuating element WS1 in the function of a mode selector switch in accordance with the EC guideline 89/392/EEC.

32.5.2 Connection for handheld units

32.5.2.1 Terminator and jump button S11

Terminator

Whether a terminator or a handheld unit is connected can be determined by querying word 0 bit 2, KEY 2. 'Terminator connected' corresponds to "High" on input KEY2.

Jump button S11

- Interlocking of axis motion via the PLC
- Interlocking of the enable key
- Jumpering of EMERGENCY STOP contacts on the handheld unit
- Manipulation-proof: Sealing cap prevents accidental actuation of key
- Jump button, non-latching
- Initiation of a monitoring time for checking the operability of the EMERGENCY STOP jumpering function
- Interruption in power supply for handheld unit connection, two-channel variant, when S11 is actuated.

⚠WARNING

It is the user's responsibility to ensure that the enable key is designed to DIN EN 602041-1, Subsection 9.2.5.8, and, when released or pushed down, stops dangerous movements reliably.

When using S11 with the "EMERGENCY STOP" jumper function, in addition to Fig.: "Handheld unit connection ZS (two-channel)" in Section: "Handheld unit connection" → "Enabling function two-channel", dangerous movements should be interlocked by the PLC using S11 and time monitoring initiated at the same time. If the signaling contact on S11:31/32 is not properly closed again on expiry of the monitoring time (approximately 5 minutes), then "EMERGENCY STOP" must be generated by the PLC.

32.5.2.2 Functional reliability of EMERGENCY STOP and enabling circuits

See diagram in Section: "Handheld unit connection " → "Enabling function two-channel"

Emergency stop circuits

The emergency stop circuit is a two-channel configuration with the following layout:

- For circuit 1:

  NC S13→X4:6→X5:12→XS12:12→EMERGENCY STOP handheld unit→XS12:1→X5:1→X4:7

- For circuit 2:

  NC S13→X24:6→X5:9→XS12:9→EMERGENCY STOP handheld unit→XS12:10→X5:10→X24:3

To avoid interruption of the EMERGENCY STOP circuits on changeover between the handheld unit and the terminator at XS12, the EMERGENCY STOP contacts of the handheld unit can be jumpered via S11.

- Contact S11:13/14 jumpers via X23:1/2 the EMERGENCY STOP contact XS12:1/12 of the handheld unit in circuit 1,
- Contact S11:43/44 jumpers via X23:5/6 the EMERGENCY STOP contact XS12:9/10 of the handheld unit in circuit 2.

The time monitoring function in the PLC serves to detect malfunctions of the button S11: If the contact S11:31/32 does not close properly in the predefined time, the PLC must interrupt the emergency stop chain. The contact is interrogated via the current path X23:8→X4:8→X4:1→Opto-coupler KEY0→Word 0, Bit 0 of the PLC input image (see Section: "Interfaces" → "PLC interface").

Enable circuit

The two-channel variant of the enable function is used for PP 012:

- The enabling buttons are called up via X4:12→X5:17→XS12:16 and X24:2→X5:6 →XS12:6.
- Interrogation via XS12:5→X5:5→X4:10 and XS12:14→X5:14→X4:11.
- In addition, the power supply for the handheld units connected at XS12:4 is interrupted via contact S11:31/32→X23:8 and X5:4 when S11 is actuated.
- The interlock between S11 and the enable key must be implemented in the PLC.

Note

Only 2-channel handheld units can be connected.

32.5.2.3 two-channel enabling function

The circuit is shown in the diagram and the terminal assignment is shown in the following table.

Validity

The 2-channel enabling function applies for MLFBs
6FC5203–0AF25–1AA0 and
6FC5203–0AF27–1AA0–Z

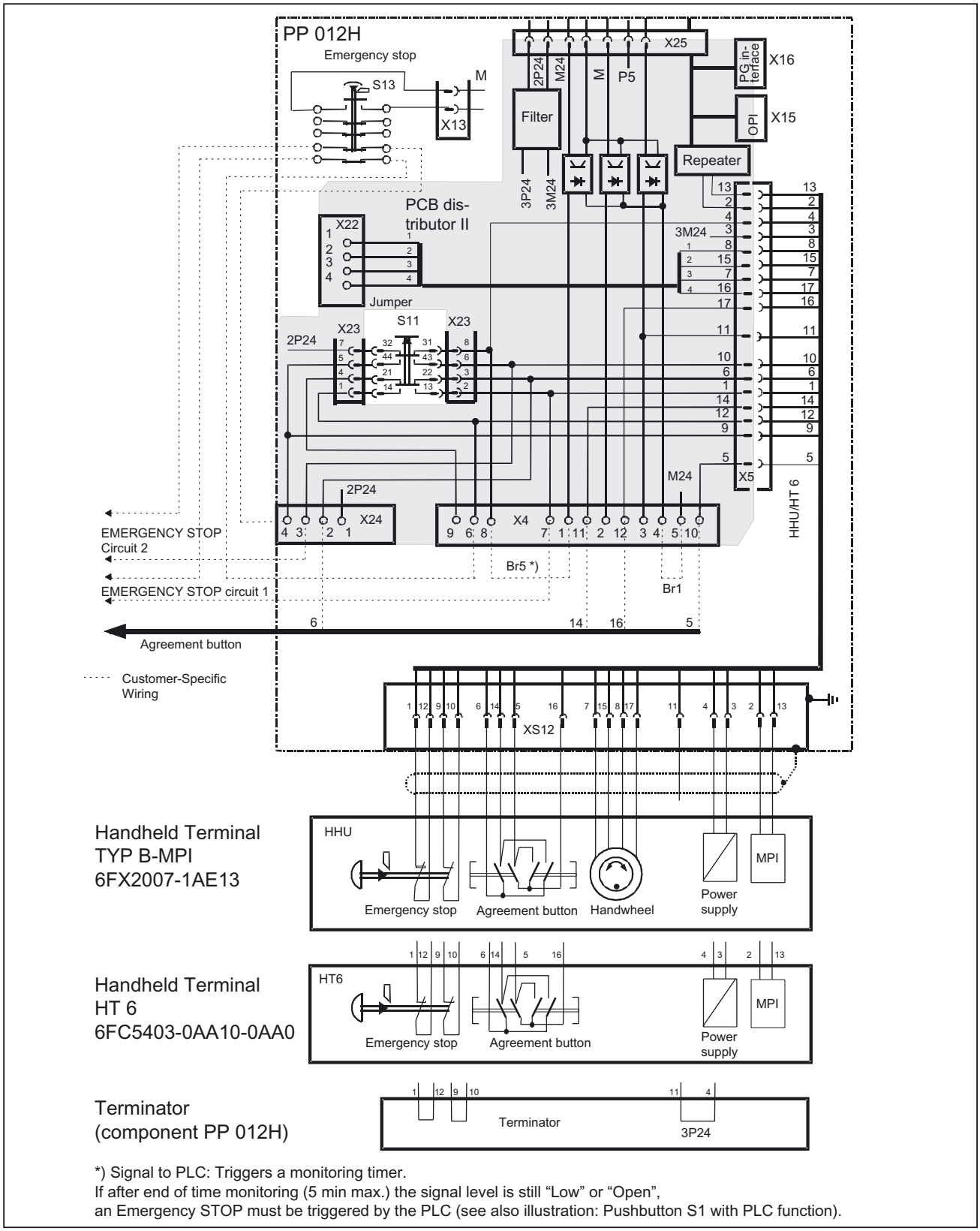

Figure 32-11 Connection for handheld unit ZS (two-channel)

Table 32-23 Terminal assignments XS12 → handheld unit (two-channel)

Pin	PP 012H	HHU(MPI)	HT6	Termination connector
1	EMERGENCY STOP 2.1	EMERGENCY STOP button 2.1	EMERGENCY STOP button 2.1	BR1
2	MPI_A	MPI_A	MPI_A	
3	3M24	M (GND)	M (GND)	
4	3P24	P24	P24	BR3
5	ZS1.1	ZS1.1	ZS1.1	
6	ZS2.2	ZS2.2	ZS2.2	
7	HR_B	HRB	_	
8	HR_A	HRA	_	
9	EMERGENCY STOP 1.2	EMERGENCY STOP button 1.2	EMERGENCY STOP button 1.2	BR2
10	EMERGENCY STOP 1.1	EMERGENCY STOP button 1.1	EMERGENCY STOP button 1.1	BR2
11	KEY2	KEY2	KEY2	BR3
12	EMERGENCY STOP 2.2	EMERGENCY STOP button 2.2	EMERGENCY STOP button 2.2	BR1
13	MPI_B	MPI_B	MPI_B	
14	ZS2.1	ZS2.1	ZS2.1	
15	HR_XA	HR_XA	-	
16	ZS2.1	ZS2.1	ZS2.1	
17	HR_XB	HR_XB	-	

32.6 Circuits and wiring

Custom-made wiring

There are various possible applications for connecting the key inputs KEY0 to KEY2:

1. The enabling button connection corresponds to the diagram in Section: "Handheld unit connection " → "Enabling function two-channel"
2. Use as isolated inputs with reference potential at X4/5
3. Use of button S11 with PLC function without jumpering

For the required jumper assignment and their meaning, please refer to the Tables below.

Table 32-24 Custom-made wiring

Br1	Br5	
-	-	Use of the connections X4:1;2;3 as isolated inputs. The reference potential is at X4/4 here.
X	X	PLC function

Table 32-25 Use of the connections

Potential	Connection	use
2P24	X3/11,12	Control of inputs HS1 to HS4, HS7 to HS10, HS14 and HS15
	X24/1	Control of inputs KEY0 to KEY2
KEY0 ... 2	X4/1 ... 3	Inputs KEY0 to KEY2
M24	X4/5	Reference potential of inputs KEY0 to KEY2; no external use

Button S11 with PLC function

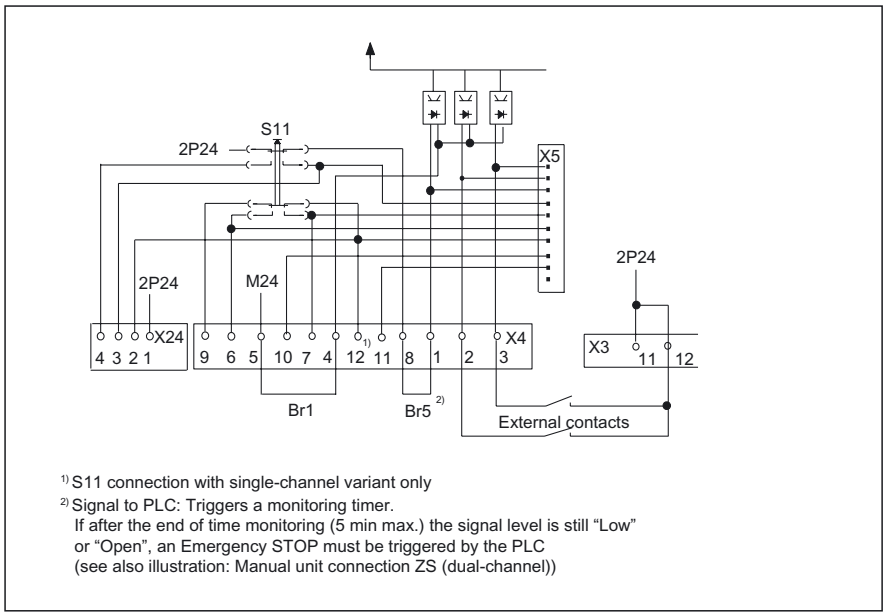

1) S11 connection with single-channel variant only
2) Signal to PLC: Triggers a monitoring timer.
If after the end of time monitoring (5 min max.) the signal level is still “Low” or “Open”, an Emergency STOP must be triggered by the PLC
(see also illustration: Manual unit connection ZS (dual-channel))

Figure 32-12 Button S11 with PLC function

Ext. control of the indicator lamps HS1 ... HS10

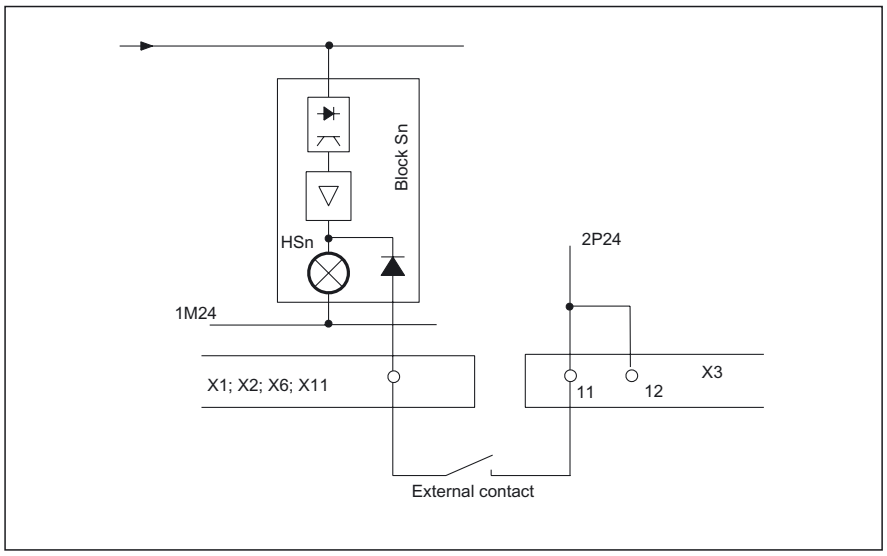

Figure 32-13 External control of indicating lamps in keys HSn

Circuit for EMERGENCY STOP button

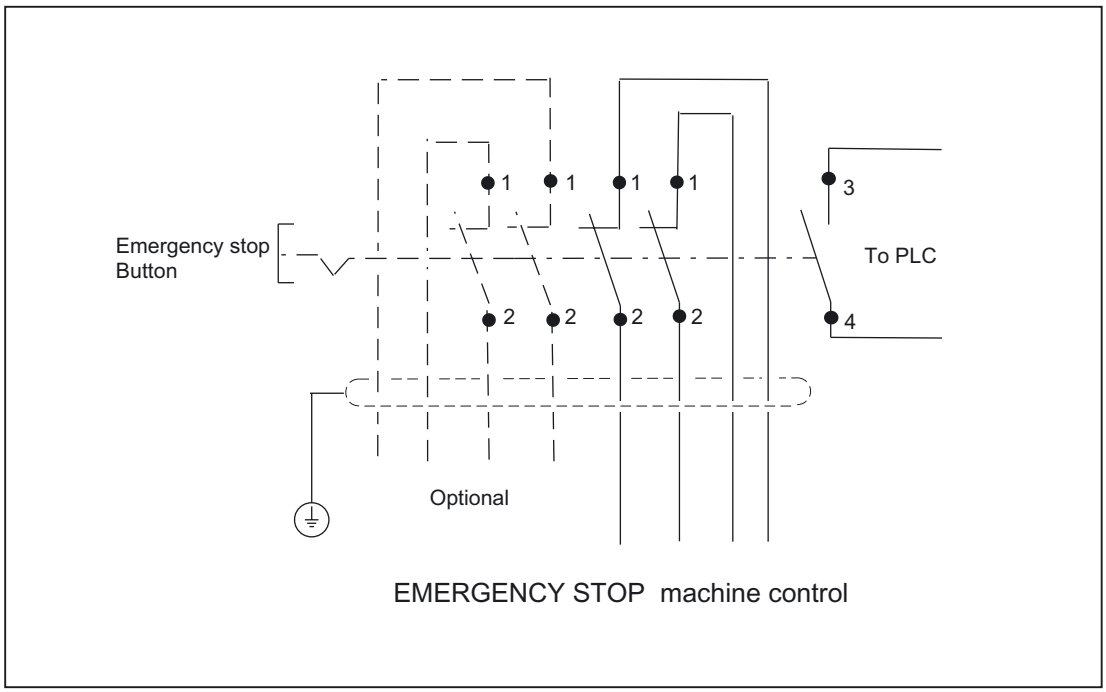

Figure 32-14 Suggested circuit for EMERGENCY STOP circuit

Connecting the spindle speed override WS3

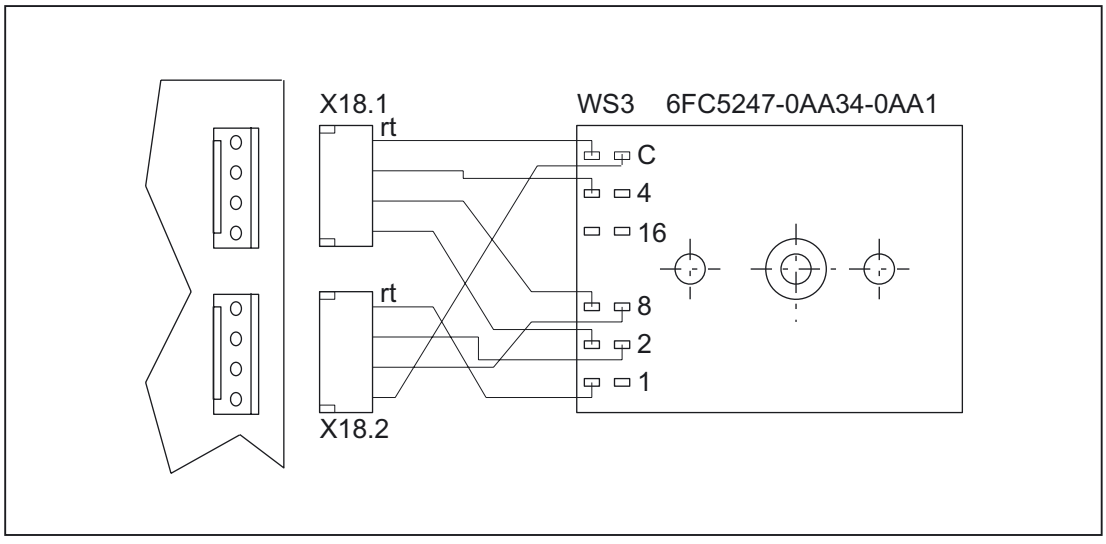

Figure 32-15 Connection WS3 spindle override speed/input

Direct control key connection

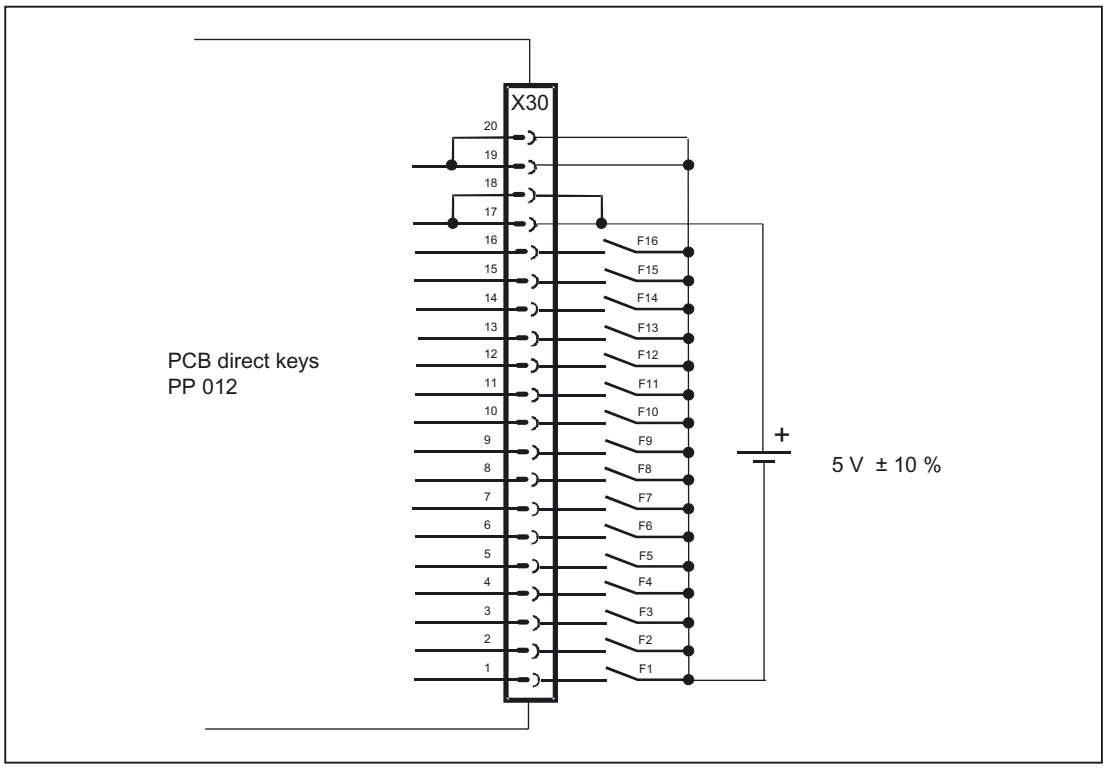

Figure 32-16 Direct control key connection

Connecting the expansion panel

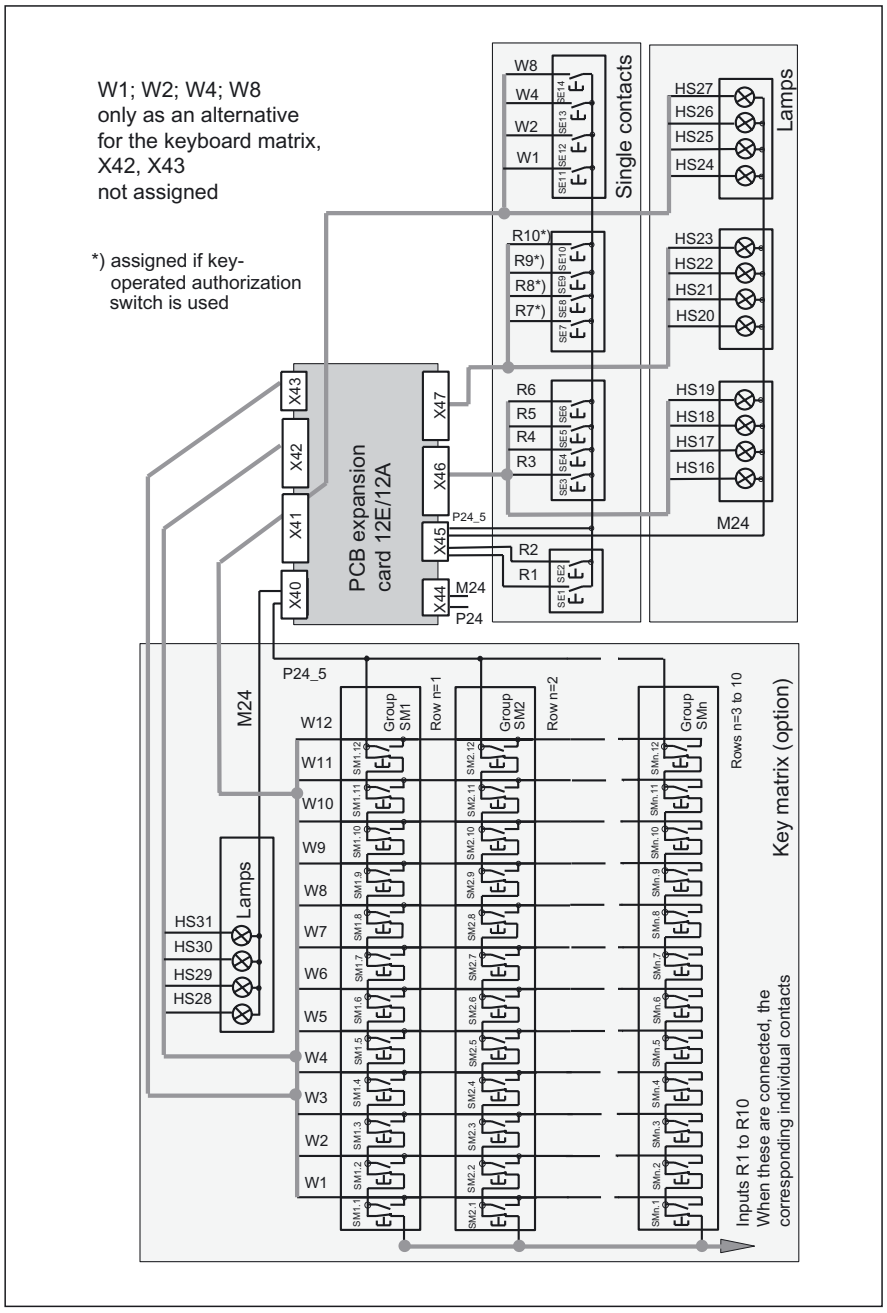

Figure 32-17 Connecting the expansion panel to PCB expansion card 12E/12A

Example of wiring

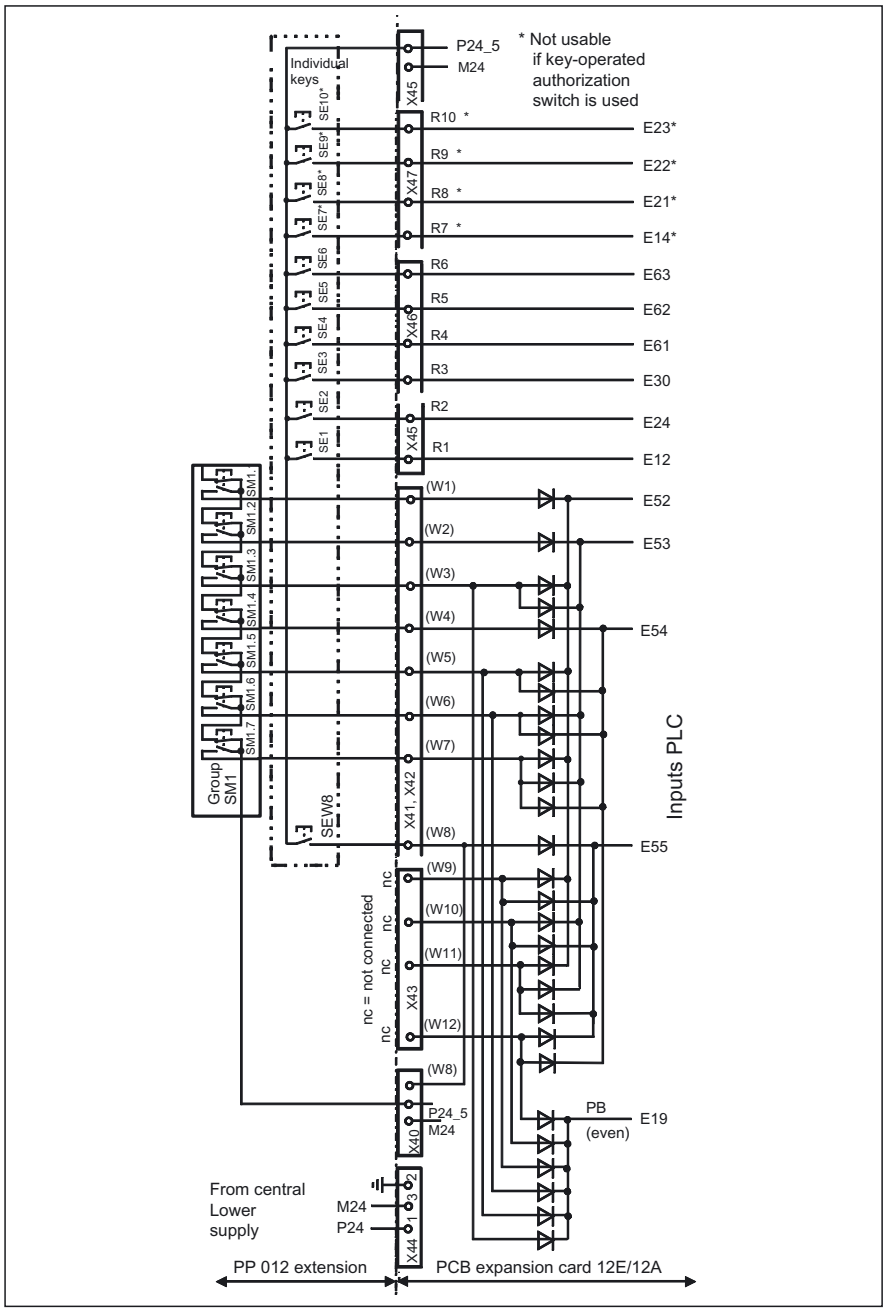

Figure 32-18 Wiring example eleven single keys and seven matrix keys

32.7 Initialization

Jumpering

The following settings are possible with DIP switches S16, S17, S18:

Table 32-26 Assignments of S16, S17, S18 on PP 012

S17				S16				S18				Meaning	
4	3	2	1	4	3	2	1	4	3	2	1		
On												Baud rate: 1.5 Mbaud	OPI
Off												Baud rate: 187.5 kbaud	MPI
	On	On										not applicable	
	On	Off										200 ms cycl. Transmit time frame	
	Off	On										100 ms cycl. Transmit time frame	
	Off	Off										50 ms cycl. Transmit time frame	
			On	On	On	On						Bus address:	15
			On	On	On	Off						Bus address:	14
			On	On	Off	On						Bus address:	13
			On	On	Off	Off						Bus address:	12
			On	Off	On	On						Bus address:	11
			On	Off	On	Off						Bus address:	10
			On	Off	Off	On						Bus address:	9
			On	Off	Off	v						Bus address:	8
			Off	On	On	On						Bus address:	7
			Off	On	On	Off						Bus address:	6
			Off	On	Off	On						Bus address:	5
			Off	On	Off	Off						Bus address:	4
			Off	Off	On	On						Bus address:	3
			Off	Off	On	v						Bus address:	2
			Off	Off	Off	On						Bus address:	1
			Off	Off	Off	Off						Bus address:	0
							Off		Off			Parameter set	1
							On		Off			Parameter set	2
							On		On			Parameter set	3
											On	Hardware reset "ON"	
											Off	Hardware reset "OFF"	
										On		Pushbutton panel - factory setting: NC function	
										Off		Pushbutton panel NO contact function	
								X				Reserve GD project	

DIP switch settings

Table 32-27 Default setting for 840D

Application: **the PP 012 to an 840D**												
S17				S16				S18				Meaning
4	3	2	1	4	3	2	1	4	3	2	1	
X	Off	On	Off	On	On	Off	Off	Off	Off	X	Off	187.5 kbaud/1.5 Mbaud cycl. transmit time frame 100 ms bus address 6 parameter set 1
Prerequisite: None, can be directly connected to the MPI/OPI of the 840D												

Table 32-28 Default setting for S7-300

Application: **Connecting the PP 012 to an S7-300**												
S17				S16				S18				Meaning
4	3	2	1	4	3	2	1	4	3	2	1	
Off	Off	On	Off	On	On	Off	On	Off	Off	X	Off	187.5 kbaud/1.5 Mbaud cycl. Transmit time frame 100 ms bus address 6 parameter set 2
Prerequisite: A global data table created using HISTEP												

Table 32-29 Setting for S7-300 with two machine control panels

Usage scenario: **Connecting the PP 012 to an S7-300**												
S17				S16				S18				Meaning
4	3	2	1	4	3	2	1	4	3	2	1	
Off	Off	On	Off	On	On	Off	On	Off	On	X	Off	187.5 kbaud/1.5 Mbaud cycl. Transmit time frame 100 ms bus address 6 parameter set 3
Prerequisite: A global data table created using HISTEP												

Settings for transmission cycle time

The load on the PLC by the PP 012 can thus be adapted.

The PLC expects a message frame at least every 500 ms from the PP 012. If no key is actuated, the PP 012 transmits a message frame cyclically to the PLC. This cycle time is set on S17 DIP switches 2 and 3.

Communication parameters

The switchover of the sets of parameters (GD identifications) for communication between control system and PP 012 is implemented via DIP switch S16/1 or S18/3.
The switchover only takes effect after Power On at the PP 012.

The following applies:	Transmitted data	= PP 012 → control
	Received data	= control → PP 012

Table 32-30 Parameter set

Index	Description	Parameter set 1	Parameter set 2	Parameter set 3
1	Receive GD circuit no.	internal assignment	1	2
2	Receive GI no.		1	1
3	Object number for receive GI		1	1
4	Send GD circuit no.		1	2
5	Transmit GI no.		2	2
6	Object number for transmit GI		1	1

Global data table

When the PP 012 is operated in conjunction with an S7-300 CPU, set of parameters 2 is selected and a global data table is created using HISTEP.

The communication link to the PP 012 must be parameterized as follows:

Table 32-31 Global data for set of parameters 2

GD identification	ebf/s7-300:	efb/PP 012:	
GD 1.1.1	>>ab60:8	eb0:8	
GD 1.2.1	eb60:8	>>ab0:8	

The specifications "ab60" and "eb60" for S7 are only examples; the signals can also be transferred to other locations.

The GD identification is generated by the compiler.

GD 1.1.1 PP 012 is the receiver
GD 1.2.1 PP 012 is the transmitter

This assignment corresponds to set of parameters 2 as per Table:
"Communication parameters" → "Parameter set".

Note

Make sure that a data width of eight bytes is always assigned for the input and output image!

If two PP 012s are to be connected to an S7–300 CPU, set of parameters 3 must be set, and the following global data table must be created using HISTEP.

Table 32-32 Global data for set of parameters 2

GD identification	ebf/s7-300::	ebf/PP 012::	
GD 1.1.1	>>ab60:8	eb0:8	
GD 1.2.1	eb60:8	>>ab0:8	
GD 2.1.1	>>ab120:8		eb0:8
GD 2.2.1	eb118:8		>>ab0:8

Further GD communications can be configured in the following lines.

⚠ DANGER

The transmission path (MPI/OPI) from PP 012 to the central controller must be monitored by the user.

32.8 Communication between SIMATIC S7 and PP 012

Example of parameterization

Your program can read the information of the GD package status from the operands you assign the corresponding GDS identification in the global data table in the STEP 7 tool "Communication Configuration".

If a communication error occurs, the operating system writes error information to these operands (described in the Table below). You can then use this information to create conditional program branches as a response to the communication errors.

For the status information of the communication, a double word (32 bit) is provided.

For the contents of the double word, see the Table below:

Table 32-33 Status information

Bit	Status: Description of error	from transmitting CPU	from receiving CPU
0	Area length error in sender	+	+
1	Block cannot be found in sender	+	+
2	I/O access error in sender	+	+
3	GD packet lost	+	+
	• with transmitter		
	• in the connection		
	• with receiver		
4	Syntax error in GD packet	+	+
5	GD object missing from GD packet		+
6	Wrong assignment of GD object length in sender and receiver		+
7	Address range length error in sender		+
8	GD package cannot be found in receiver		+
9	I/O access error in receiver		+
10	Timeout in receiver		+
11	Restart of receiver		+
12-30	Reserved		+
31	Receive new data		+

References: // SIMATC S7, User Manual

Note

Monitoring of the MPI link between SIMATIC S7 and PP 012 can be implemented with the global data bit, bit 31. The user can reset bit 31 and provide it with a watchdog. If this bit is not set again within the predefined time interval, a fault in the line is the cause.

Table 32-34 Example

GD identification	as314//cpu1:	pp012_t//cpu1::
GST	md120	
GDS 1.1	md130	
SR 1.1	4	1
GD 1.1.1	>>ab120:8	ab0:8
GDS 1.2	md140	
SR 1.2	4	4
GD 1.2.1	eb118:8	>>eb0:8

32.9 PP 012 expansion

Front view with section

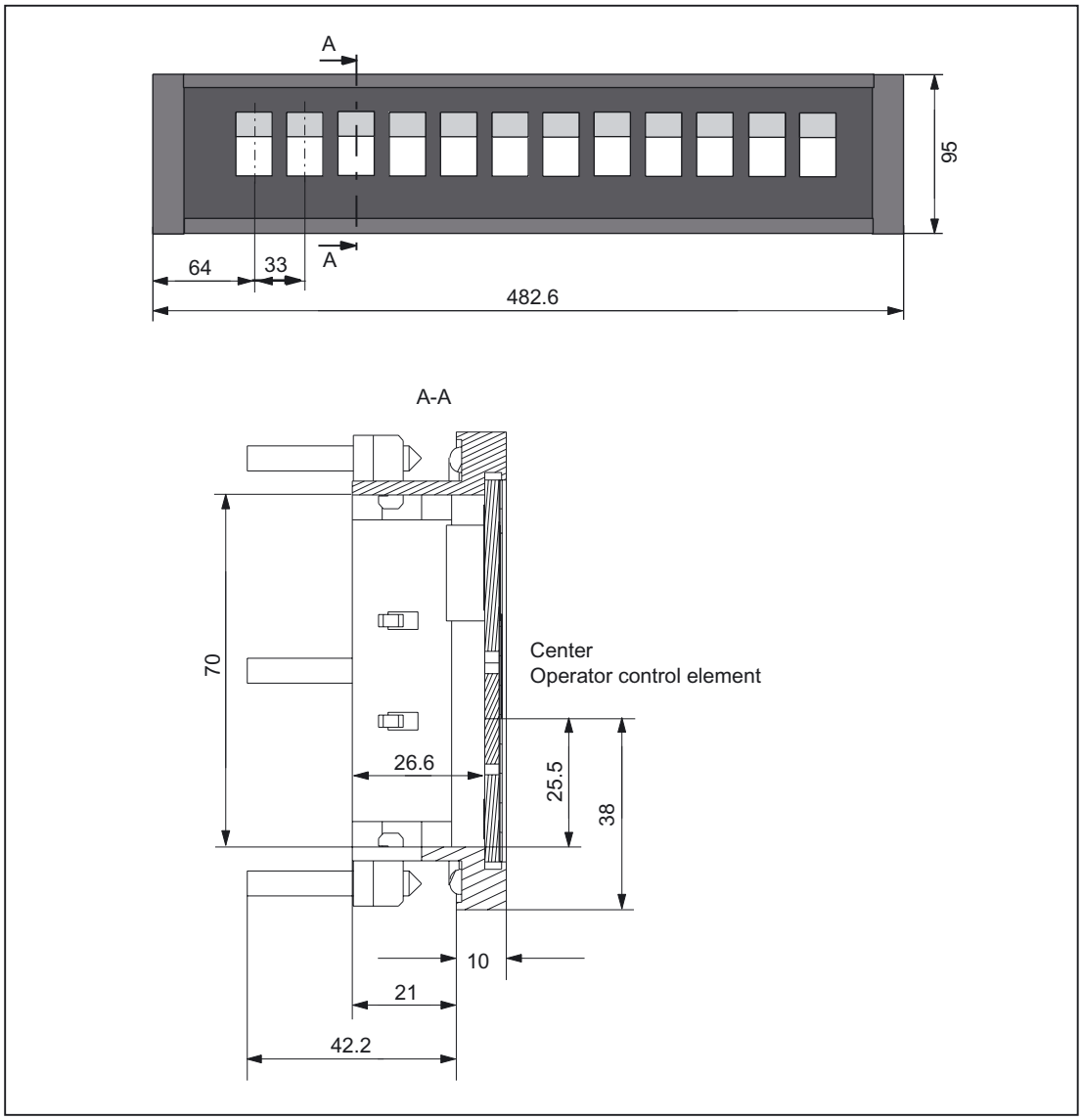

Figure 32-19 PP 012 expansion

- Order code MLFB 6FC5247-0AA43-1AA0
- Can be equipped with max. 12 control devices, diameter 22 mm, grid 33 mm
- Labeling with exchangeable text labels

Panel cutout

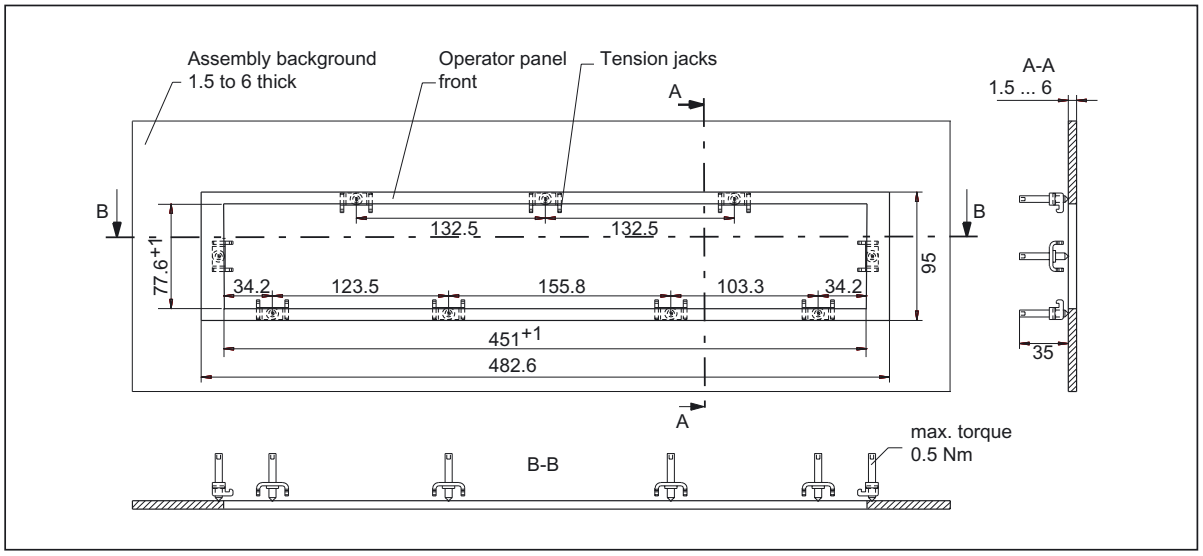

Figure 32-20 Panel cutout for PP 012 extension

Dimensions for labeling the slide-in labels

The following drawing is intended purely as an example; multiple slide-in labels can also be arranged.

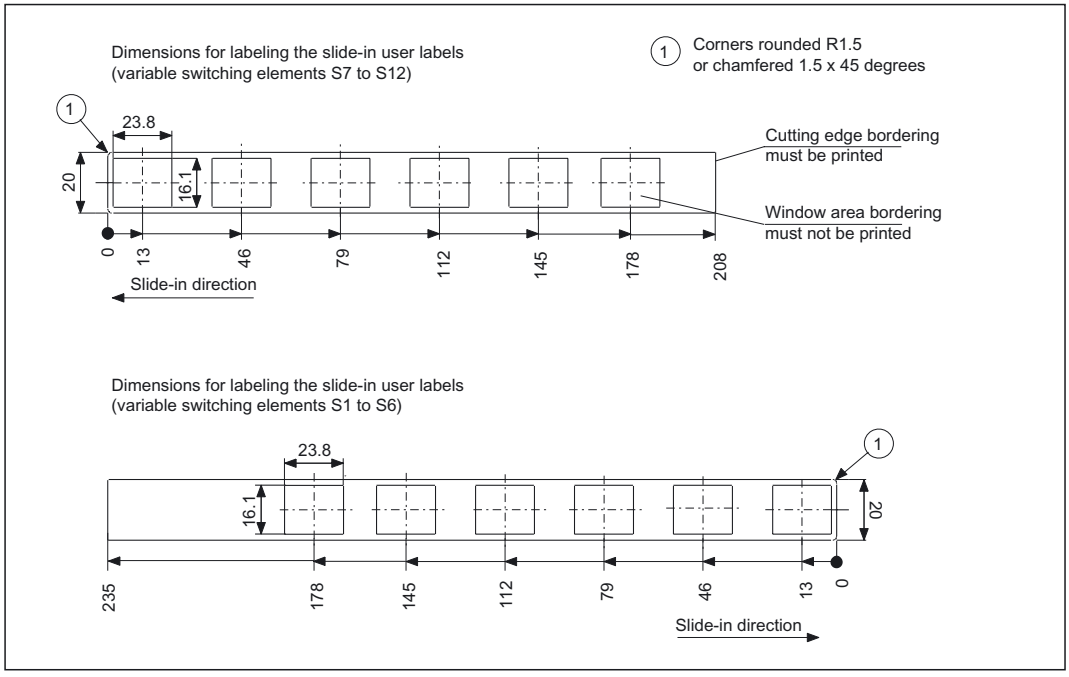

Figure 32-21 Dimensions for texts on the slide-in labels (PP 012 extension)

32.10 Functions of PCB expansion card 12I/12O

32.10.1 Inputs/Outputs

Inputs

Table 32-35 Inputs (possible combinations)

Without authorization key-operated switch				With authorization key-operated switch		
Design	**Button matrix (option)**	**Switch/ independent single contacts**		**Design**	**Button matrix (option)**	**Switch/ independent single contacts**
1	without	14 contacts		14	without	10 contacts
2	7 buttons	11 contacts		15	7 buttons	7 contacts
3	12 buttons	10 contacts		16	12 buttons	6 contacts
4	14 buttons	9 contacts		17	14 buttons	5 contacts
5	24 buttons	8 contacts		18	24 buttons	4 contacts
6	36 buttons	7 contacts		19	36 buttons	3 contacts
7	48 buttons	6 contacts		20	48 buttons	2 contacts
8	60 buttons	5 contacts		21	60 buttons	1 contacts
9	72 buttons	4 contacts		22	72 buttons	0 contacts
10	84 buttons	3 contacts		Functions of buttons in the matrix:		
11	96 buttons	2 contacts		+ non-locking buttons + individual button activation + no switch function		
12	0108 buttons	1 contacts				
13	120 buttons	0 contacts				

Outputs

16 outputs for controlling lamps, four of which are optional.

Button matrix (option)

8 inputs W3, W5, W6, W7, W9, W10, W11, W12 for matrix
4 outputs A28 to A31 for controlling lamps

32.10.2 Button assignment within matrix

Assignment paradigm

Key value Wn					
Wn	W8/ E55	W4/ E54	W2/ E53	W1/ E52	E19/ PB
1	0	0	0	1	0
2	0	0	1	0	0
3	0	0	1	1	1
4	0	1	0	0	0
5	0	1	0	1	1
6	0	1	1	0	1
7	0	1	1	1	0
8	1	0	0	0	0
9	1	0	0	1	1
10	1	0	1	0	1
11	1	0	1	1	0
12	1	1	0	0	1

Matrix row Rn										
Rn	E 12	E 24	E 30	E 61	E 62	E 63	E 14	E 21	E 22	E 23
1	0	1	1	1	1	1	1	1	1	1
2	1	0	1	1	1	1	1	1	1	1
3	1	1	0	1	1	1	1	1	1	1
4	1	1	1	0	1	1	1	1	1	1
5	1	1	1	1	0	1	1	1	1	1
6	1	1	1	1	1	0	1	1	1	1
7	1	1	1	1	1	1	0	1	1	1
8	1	1	1	1	1	1	1	0	1	1
9	1	1	1	1	1	1	1	1	0	1
10	1	1	1	1	1	1	1	1	1	0

32.11 Technical specifications

32.11.1 PP 012

Security		
Safety class	III; PELV acc. to EN 50178	
Degree of protection per EN 60529	Front: IP54	Rear side: IP10A
Approvals	CE / cULus	
Electrical specifications		
Input voltage	DC 24 V	
Power consumption, max.	20 W	
Mechanical data		
Dimensions	Width: 483 mm Height: 155 mm	Depth: 175 mm Mounting depth: 105 mm
Weight	Approx. 3 kg	
Mechanical ambient conditions	**Operation**	**Transport** (in transport packaging)
Vibratory load	2 -9 Hz: 3 mm 9 -200 Hz: 10 m/s^2 3M4 per EN 60721-3-3	2 -9 Hz: 3.5 mm 9 -200 Hz: 10 m/s^2 2M2 per EN 60721-3-2
Shock stressing	100 m/s^2, 11 ms, 3M2 as per EN 60721-3-3	100 m/s^2, 11 ms 2M2 as per EN 60721-3-2
Climatic ambient conditions		
Cooling	By natural convection	
Condensation, spraying water and icing	Not permitted	
Supply air	Without caustic gases, dusts and oils	
	Operation	**Storage/shipping** (in transport packaging)
Applicable standards	EN 60721-3-3	EN 60721-3-1 / -3-2
Climate class	3K5	1K3 / 2K4
Temperature limits	0 ... 45 ºC (at front) 0 ... 55 ºC (at rear)	-40 ... 70 ºC
Temperature change	Max. 10 K/h	Max. 18 K/h
Limits for relative humidity	5 ... 80%	5 ... 95%
Permissible change in the relative air humidity	max. 0.1% /min	

32.11.2 Input/output interface of individual wiring

Button contact maker

Contacts with floating outputs S1 to S4; S7 to S10; S11; S14; S15
(NC contact or NO contact)

Table 32-36 NO contacts S1 to S4; S7 to S10; S14; S15

		AC	DC
Rated insulation voltage	Ue	50 V	50 V
Rated operating current	Ie	2 A	
Rated operating current at 24V	Ie		2 A
Min. rated operating current at 5 V	Imin		1 mA
Volume resistance			< 20 mΩ
Switching capacity		10 Ie	1.1 Ie
Max. operating current for reference potential		8 A	8 A

Selector switch

Contacts with floating outputs WS1/9-11; 13; 15;

Table 32-37 Selector switch

	Load		AC	DC
Rated operating voltage		Ue	300 V	300 V
Switching capacity	resistive		10 A	
	Inductive		>2 A	
Switching capacity at 24 V	resistive			10 A
	Inductive			6 A
Rated values for arc-free switching at 24 V			0.3 A	0.22 A

EMERGENCY STOP button

Contacts with floating outputs S13

Table 32-38 EMERGENCY STOP button

	Usage category (EN 60947-5-1)		AC	DC
Rated operating voltage		Ue	24 V	24 V
Switching capacity	AC-12	Ie	10 A	
	AC-15	Ie	6 A	
	DC-12	Ie		10 A
	DC–13	Ie		3 A
Min. rated operating current at 5 V		Imin		1 mA
For further parameters, see pushbutton and indicator light SIGNUM 3SB3				

Inputs

X4: KEY 0 to KEY 2

Table 32-39 Inputs X4: KEY 0 to KEY 2

State		Voltage switched	Current switched
H signal	Rated value	24 V	
	Signal level	+15 V to +30 V	min. 4 mA (at 15 V) max. 9.5 mA (at 30 V)
L signal	Rated value	0V or open	
	Signal level	–3 V to +5 V	
In a group of	3		
Length of cable	max. 50 m AWG 20 – 16		

X1, X2, X6, X11

Table 32-40 Inputs HS1 to HS4; HS7 to HS10; HS14; HS15

State		Voltage switched	Current switched
Pilot lamp ON	Rated value	24 V	50 mA (switch-on current max. 600 mA)
	Signal level	+18 V to +30 V	
Pilot lamp OFF	Rated value	Open	
Length of cable	Max. 10 m AWG 20–16		

X30

Table 32-41 Input X30 direct keys, F1 to F16

State		Voltage switched	Current switched
H signal	Rated value	5 V	
	Signal level	+5 V or open	
L signal	Rated value		
	Signal level	-3 V to +1 V	≤ 11 mA
In a group of	16		
Length of cable	Max 0.6 m AWG 28		

Printed circuit board input/output (option)

X44

Table 32-42 Inputs X44

Voltage supply				
Total current	**Nominal voltage**	**Upper voltage limit**	**Lower voltage limit**	**Fuse**
Max. = 5 A, depending on the lamp load	DC 24 V	DC 30.2 V	18.5 VDC	2 x 10A

Inputs

X41, X42, X43, X45, X46, X47: E12, E14, E21 to E24, E30. E52 to E55, E61 to E63, W1 to W12

Table 32-43 Inputs

State		Voltage switched	Current switched
H signal	Rated value	24 V	
	Signal level	+15 V to +30 V	min. 3.6 mA (at 15 V) max. 8 mA (at 30 V)
L signal	Rated value	0V or open	
	Signal level	–3 V to +5 V	
In a group of	Common root		
Length of cable	Max 50 m AWG 16		

Lamp outputs

X41, X42, X43, X45, X46, X47: HS16 to HS31

Table 32-44 Lamp outputs

State		Voltage switched	Current switched
H signal	Rated value	24 V	
	Signal level	+20 V to +30 V	Max. 0.5 A/output
L signal	Rated value		
	Signal level	Open	≤ 25 µA
In a group of	16		
Length of cable	Max. 50 m AWG 16		
Output aggregate current			Max. 5 A

Outputs P24_5

X40:1, X45:1

Table 32-45 Outputs P24_5

State		Voltage switched	Current switched
Output aggregate current			max. 700 mA
	Rated value	+24 V	

32.12 Configuring

32.12.1 Delivery variants

Note

When replacing the existing PP 031 devices with variants of the PP 012, downwards compatibility cannot always be assumed!

Components

Pushbutton panel PP 012	**6 f C 5 2 0 3 - 0 A F 2 X - X A A 0**
PP 012 basic device EMERGENCY STOP button with 2 NC contacts + 1 NO contact, keyswitch, 8 illuminated pushbuttons with incandescent lamps, button caps 2*GR, 2*RT, 2*GB, 2*KI, 2* dummy plugs BVR22, programming device and 24V connection, feedrate override, cover plate for 2nd override, with blank special film for slide-in labels with dimensional drawing, PCB direct keys with ribbon cable 1)	6 F C 5 2 0 3 – 0 A F 2 4 – 0 A A 0
PP 012H As base unit, also with handheld unit connection 17-pole socket and jump button with repeater function and distributor, two-channel enabling function	6 F C 5 2 0 3 – 0 A F 2 5 -1 A A 0
PP 012/S Special variant based on PP 012; the respective equipment is unambiguously identified by a Z-option specification	6 F C 5 2 0 3 – 0 A F 2 6 – 0 A A 0 – Z
PP 012/S Special variant based on PP 012H; the respective equipment is unambiguously identified by a Z-option specification, 2-channel enabling function	6 F C 5 2 0 3 – 0 A F 2 7 -1 A A 0 – Z
1) When assigning the colors for keys and pilot lamps to the corresponding functionality, observe the standard EN 60204 Part 1 or VDE 0113 Part 1, Section "Pushbuttons/Colors".	

Extensions to the PP 012 (can be ordered and installed by the customer separately)	
Override switch, 16-level speed	6 F C 5 2 4 7 – 0 A A 3 4 – 0 A A 1
"+/-" keys raised	6 F C 5 2 4 7 – 0 A A 4 1 – 0 A A 0
PCB expansion card 12E/12A	6 F C 5 2 4 7 – 0 A A 4 2 – 0 A A 0
Extension panel with 12 slots	6 F C 5 2 4 7 – 0 A A 4 3 -1 A A 0
2 x NC contacts for Emergency Stop buttons	3 S B 3 4 0 0 – 0 E
Replacement parts kit PP 031–MC 5 covers, 5 films, 2 sealing caps, button cap set, 5 incandescent lamps with sockets, 1 dummy plug, 1 illuminated contact maker key, 1 printing drawing A5E00122711A–A1	6 F C 5 2 4 7 – 0 A A 2 7 -0 A A 0

Extensions for project-specific variants		
Slide-in labels as per customer layout		
Set of light emitting diodes (ultra-bright)		
Knob FS1 for WS1		
Actuator and contact maker	1)	corresponding table under Section: "Configuration" → "Project-specific components"
Key-operated authorization switch		at customer request
PCB_input/output with key matrix		at customer request
1) When assigning the colors for keys and pilot lamps to the corresponding functionality, observe the standard EN 60204 Part 1 or VDE 0113 Part 1, Section: "Pushbuttons / Colors".		

32.12.2 Project-specific components

Retrofit control elements

Function	Upper section actuator / accessories	Lower section switching element/ signaling lamp	Mounting location	use
Signaling lamp	Illuminated nipple 28 mm Ø RXJN–GB (yellow) RXJN–GN (green) RXJN–RT (red) RXJN–BL (blue) RXJN–KL (crystal clear) RXJN–WS (white)	Lamp fixture AL5 with incandescent lamp T5.5K/30 or Spot LED L5.5K28UG (green) L5.5K28UR (red) L5.5K28UW (white) L5.5K28UY (yellow) L5.5K28UB(blue)	S1 ... S4 S7 ... S10 S14, S15	Lamp
Button	Pushbutton 28 mm Ø RXJN-GB (yellow) RXJN-GN (green) RXJN-RT (red) RXJN-BL (blue) RXJN-KL (crystal clear) RXJN-GWS (black)	Button contact maker AT2		S11 1NC internal, 2NO+1NC external for S1 1NC internal 2NO+1NC ext. for S2...S4, S7...S10 1NC internal, 1NO+1NC external for S14, S15, 1NC int., 2S external
Illuminated pushbutton with socket for T5.5K	Pushbutton 28 mm ∅ RXJN-GB (yellow) RXJN-GN (green) RXJN-RT (red) RXJN-BL (blue) RXJN-KL (crystal clear)	Illuminated key contact maker ATL2 with incandescent lamp T5.5K/30 or Spot LED L5.5K28UG (green) L5.5K28UR (red) L5.5K28UW (white) L5.5K28UY (yellow) L5.5K28UB (blue)		S11 1NC internal, 2NO+1NC external for S1 1NC internal 2NO+1NC ext. for S2...S4, S7...S10 1NC internal, 1NO+1NC external for S14, S15, 1NC int., 2NO external, lamps can be externally controlled

Function	Upper section actuator / accessories	Lower section switching element/ signaling lamp	Mounting location	use
Keyswitch **Switching angle 90°** **2 positions** **Key removable in both positions**	Safety lock cylinder 28 mm Ø RXJSSA 15 E	Button contact maker AT2		1NC internal, 2NO+1NC external for S1 1NC internal 2NO+1NC ext. for S2...S4, S7...S10 1NC internal, 1NO+1NC external for S14, S15, 1NC int., 2NO external
Raised keys **6FC5347-0AA41-0AA0**	2 RTAO pushbuttons with plunger elongation	2 AT2' Special version		
Designation field	Replaceable text insert strips			
Dummy plug	BVR22			S14 and S15 with base unit
Selector switch	Knob FS1		WS1	Re-equipping to knob-operated switch
Speed/rapid override		6FC5247-0AA34-0AA1	WS3	Connection to PCB PP 031R
EMERGENCY STOP button	Switching element: 2 NC contacts	3SB3400-0E	S13	Expans. NC contact EMERGENCY STOP

Note

When assigning the colors for keys and pilot lamps to the corresponding functionality, observe the standard EN 60204 Part 1 or VDE 0113 Part 1, Section: "Pushbuttons / Colors".

32.12.3 Rating plates

The components and modules are provided with the following rating plates:

Components

Example:

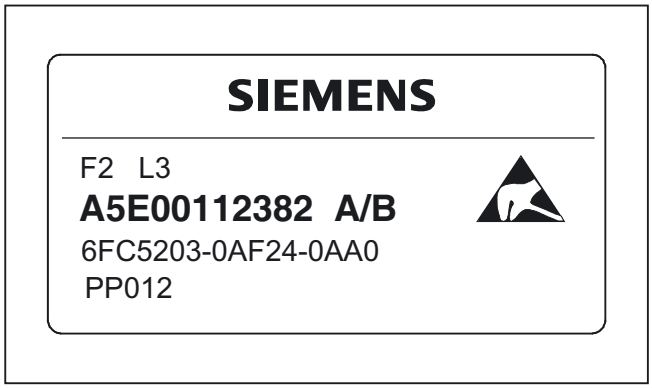

Explanation:	F2	Manufacturer site
	L3	Date of manufacture
	A5E00112382	ID number
	A / B / C / D	Product version
	6FC5 203-0AF24-0AA0	MLFB
	PP012	Component name

Printed circuit boards

Example:

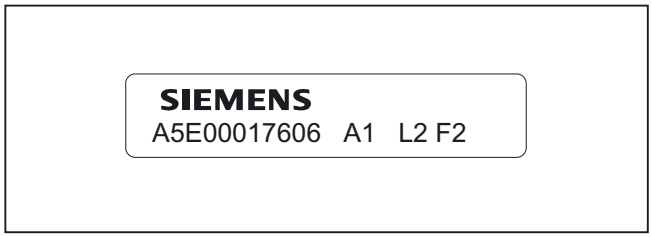

Explanation:	A5E00017606	ID number
	A1	Product version
	L2	Date of manufacture
	F2	Manufacturer site

In case of technical queries or service, please quote all data on the rating plate to the local SIEMENS office responsible for your equipment.

32.13 Service information

Changing the lamps on illuminated keys

1. Use a screwdriver to pull the key cap forward and off.
2. Use lamp remover LZ5 to lever out the key carrier.
3. Change the lamp using service tool LZ5 or a suitable insulating tube
4. Reinstall the key carrier and key cap in reverse order.

Lamp remover LZ5 is not a SIEMENS product. It can be obtained from the Schlegel company.

Georg Schlegel GmbH & Co. KG

Am Kapellenweg	Phone.: 0 73 71 / 502-0
88525 Dürmentingen	Fax: 0 73 71 / 502 49
Germany	E-mail: info@schlegel.biz

Changing the lamps on pilot lamps

1. Use a screwdriver to pull the calotte and name bearing element forward and off.
2. Change the lamp using the lamp remover of service tool LZ5 or a suitable insulating tube
3. Reinstall the calotte and name bearing element.

NOTICE
When using LEDs, make sure that they are connected with the correct polarity (see Fig.: "Mounting position of LEDs" in section: "Mounting")

Mounting additional control elements

1. If necessary, unscrew the blank plug.
2. Place the contact maker on the socket and insert the lamp if required.
3. Insert pushbutton through front panel and screw on cap nut (by several turns).
4. Press pushbutton on contact maker. Note the position of the twist protection device!
5. Screw down cap nut (tightening torque 0.8 Nm).

Insert slide-in labels

1. Create the slide-in label (see Section: "Accessories" → "Labeling the slide-in labels").
2. Pull protective films off slide-in slot.
3. Guide in the slide-in labels (labeling facing operator side).
4. Align text in window.

Note

Slide in the labels when the MPP 483 operator panel front is not yet installed.

Changing a contact maker

1. Loosen cap nut off pushbutton until just in front of contact maker.
2. Pull the pushbutton and the contact maker approximately 3 mm out of the fixture (the locating pin of the pushbutton must be freed).
3. Remove the LED.
4. Change the contact element, remove defective contact maker from fixture and press new contact maker onto fixture.
5. Insert pushbutton into aperture and partially screw on cap nut.
6. Press pushbutton on contact maker until it snaps in. Note the position of the snap nose!
7. Screw down cap nut (tightening torque 0.8 Nm).

MPI interface for customer operator panel

33

33.1 Description

A customer operator panel can be connected via the MPI interface. 64 digital inputs and 64 digital outputs with C-MOS level (5 V) are available on the module for this purpose.

Validity

The description below applies to the MPI interface
(order number 6FC5203–0AE00–0AA0)

33.2 Interfaces

Location of the interfaces

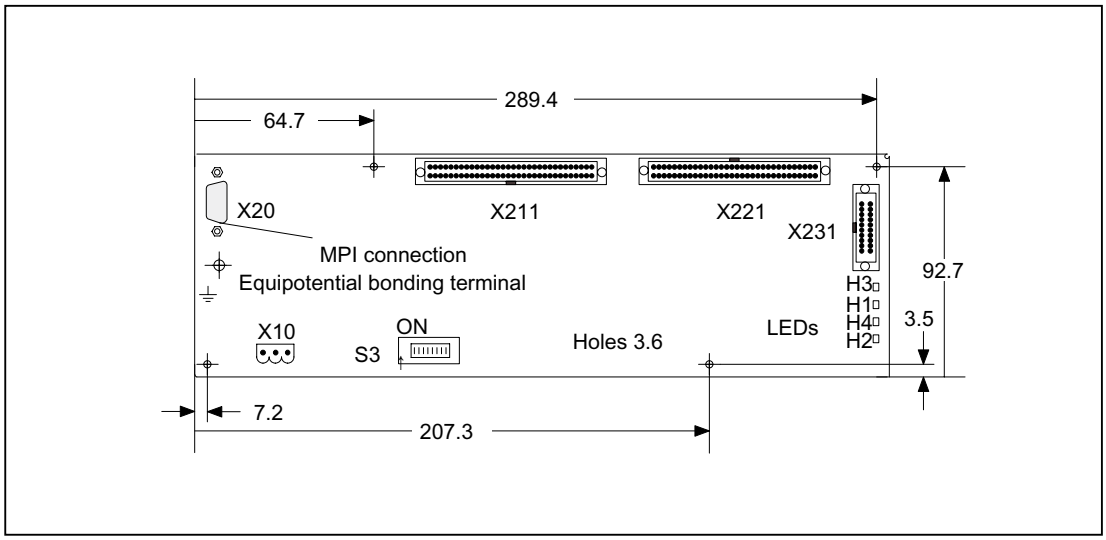

Figure 33-1 Front view of the MPI interface for customer operator panel

Power supply interface

Connector designation:	X10
Type:	3-pole Phoenix terminal block, straight

Table 33-1 X10 pin assignments

Pin	Name	Type
1	SHIELD	VI
2	M24	
3	P24	

Table 33-2 Signal names

SHIELD	Shield connection
M24	Ground 24V
P24	24V potential

Table 33-3 Signal type

VI	Voltage input

Note

The maximum length of the equipotential connection (fine-core, 10 mm^2) must not exceed 30 cm.

MPI interface

Connector designation:	X20
Type:	9-pole sub D socket connector, straight
Max. cable length	200 m
Special situations:	1.5 Mbaud / 187.5 kBaud data rate

Table 33-4 X20 pin assignments for MPI

Pin	Name	Type	Pin	Name	Type
1 / 2	Not assigned		6	2P5	VO
3	RS_OPI	B	7	Not assigned	
4	RTSAS_BTSS	O	8	XRS_OPI	B
5	2M	VO	9	RTSPG_BTSS	I

Table 33-5 Signal names

RS_OPI, XRS_OPI	Differential RS485 data OPI
RTSPG_OPI	Request to Send PG OPI
RTSAS_BTSS	Request to Send AS OPI
2M	Ground signal, isolated
2P5	+5 V, isolated

Table 33-6 Signal type

B	Bi-directional
O	Output
VO	Voltage output
I	Input

Digital inputs/outputs with C-MOS level (5 V)

Connector designation:	X211, X221 (2x 32-pole) X231 (2 x 10-pole)
Type:	Ribbon cable connector DIN 41651
Max. cable length	0.5 m

Potential pins:

The inputs/outputs (interfaces X211, X221, X231) can be loaded with a maximum current of 0.2 A via the internal 5 V power supply of the MPI interface module. This value stands for the total of all currents flowing over this interface.

64 outputs may drive a maximum current of 200 mA.

The maximum current per output is limited to 5 mA.

X221					
Pin	**Name**	**Type**	**Pin**	**Name**	**Type**
1	OUT 1	O	33	IN 14	I
2	OUT 2		34	P5	V
3	OUT 3		35	IN 15	I
4	OUT 4		36	IN 16	
5	OUT 5		37	IN 24	
6	OUT 6		38	IN 17	
7	OUT 7		39	IN 25	
8	OUT 8		40	IN 18	
9	OUT 9		41	IN 26	
10	OUT 10		42	IN 19	
11	OUT 11		43	IN 27	
12	OUT 12		44	IN 20	
13	OUT 13		45	M (GND)	V
14	OUT 14		46	IN 21	I
15	OUT 15		47	IN 28	
16	OUT 16		48	IN 22	
17	M (GND)	V	49	IN 29	
18	IN 0	I	50	IN 23	V
19	IN 8		51	IN 30	I
20	IN 1		52	P5	V
21	IN 9		53	IN 31	I
22	IN 2		54	Not assigned	
23	IN 10		55	M (GND)	V
24	IN 3		56	OUT 16	
25	IN 11		57	OUT 17	
26	IN 4		58	OUT 18	
27	M (GND)	V	59	OUT 19	

X221					
Pin	**Name**	**Type**	**Pin**	**Name**	**Type**
28	IN 5	I	60	OUT 20	O
29	IN 12		61	OUT 21	
30	IN 6		62	OUT 22	
31	IN 13		63	OUT 23	
32	IN 7		64	Not assigned	

X211					
Pin	**Name**	**Type**	**Pin**	**Name**	**Type**
1	Not assigned		33	IN 39	I
2	OUT 47	O	34	IN 45	
3	OUT 46		35	IN 38	
4	OUT 45		36	IN 44	
5	OUT 44		37	IN 37	
6	OUT 43		38	M (GND)	V
7	OUT 42		39	IN 36	I
8	OUT 41		40	IN 43	
9	OUT 40		41	IN 35	
10	M (GND)	V	42	IN 42	
11	Not assigned		43	IN 34	
12	IN 63	I	44	IN 41	
13	P5	V	45	IN 33	
14	IN 62	I	46	IN 40	
15	IN 55		47	IN 32	
16	IN 61		48	M (GND)	V
17	IN 54		49	OUT 39	O
18	IN 60		50	OUT 38	
19	IN 53		51	OUT 37	
20	M (GND)	V	52	OUT 36	
21	IN 52	I	53	OUT 35	
22	IN 59		54	OUT 34	
23	IN 51		55	OUT 33	
24	IN 58		56	OUT 32	
25	IN 50		57	OUT 31	
26	IN 57		58	OUT 30	
27	IN 49		59	OUT 29	
28	IN 56		60	OUT 28	
29	IN 48		61	OUT 27	
30	IN 47		62	OUT 26	
31	P5	V	63	OUT 25	
32	IN 46	I	64	OUT 24	

Note

The inputs/outputs are assigned to a C-MOS level (5 V). The outputs are not short-circuit-proof. Applying a higher voltage to the inputs will destroy them.

X211					
Pin	**Name**	**Type**	**Pin**	**Name**	**Type**
1	OUT 48	O	11	OUT 56	O
2	OUT 49		12	OUT 57	
3	OUT 50		13	OUT 58	
4	OUT 51		14	OUT 59	
5	OUT 52		15	OUT 60	
6	OUT 53		16	OUT 61	
7	OUT 54		17	OUT 62	
8	OUT 55		18	OUT 63	
9/10	M (GND)	V	19/20	P5	V

Table 33-7 Signal names

OUT 0 ... 63	Outputs
IN 0 ... 63	Inputs
P5	5V power supply
M (GND)	oV

Table 33-8 Signal type

O	Output
V	Voltage
I	Input

Table 33-9 Signal description

OUT 0 - OUT 63	Output signals with C-MOS level 5 V max. 5 mA
IN 0 - IN 63	C-MOS inputs with 5V level

Note

OUT 0 to OUT 47:
are switched over at cyclic intervals between 5 V and 0 V level after POWER ON.
After booting of the control, these outputs can be triggered via the PLC.

OUT 48 to OUT 63:
are set to 5 V level after POWER ON (connection and triggering of relay possible).
After booting of the control, these outputs can be triggered via the PLC.

IN 0 to IN 63:
5 V → Status FALSE as seen from the PLC
0 V → Status TRUE as seen from the PLC

LEDs H1, ..., H4:

H3: POWER: 24 V supply

H1: not used

H4: SEND: Status change on protocol transmission

H2: not used

33.3 Mounting

The mounting position is subject to the following restrictions:

- Mounting positions max. 75° off vertical permissible.
- For mounting positions greater than 60°, a fan must also be installed to keep the ambient temperature constantly below 55 °C.

33.4 Settings

Jumpering

With the DIP switch S3 (see diagram in Section: "Interfaces"), the following settings are possible:

Table 33-10 Assignments of S3 on MPI interface for customer operator panel

8	7	6	5	4	3	2	1	Meaning	
								Baud rate	
							on	1.5 Mbaud	
							Off	187.5 kbaud	
								Transmission cycle time	Receipt monitoring
					Off	on		200 ms	2400 ms
					on	Off		100 ms	1200 ms
					Off	Off		50 ms	600 ms
								Bus address	
	on							15	
	Off	on						14	
	on		on					13	
	Off	off						12	
	on			on				11	
	Off	on						10	
	on		Off					9	
	Off	off						8	
	on							7	
	Off	on						6	
	on		on					5	
	Off	off						4	
	on			Off				3	
	Off	on						2	
	on		Off					1	
	Off	off						0	
on								Interface MPI customer operator panel Series HW	
Off									

The following default settings are suggested:

Table 33-11 MPI interface for customer operator panel, default settings of S3 for 840D

1	2	3	4	5	6	7	8	Meaning
on	Off	on	Off	on	on	Off	on	- Baud rate: 1.5 Mbaud - transmission cycle time: 100 ms - bus address: 6 - MPI interface to customer operator panel

Table 33-12 MPI interface for customer operator panel, default setting S3 for 810D

1	2	3	4	5	6	7	8	Meaning
Off	Off	on	Off	on	on	Off	on	- Baud rate: 187.5 kBaud - transmission cycle time: 100 ms - bus address: 6 - MPI interface to customer operator panel

Settings for transmission cycle time

The PLC expects a message frame from the interface module at least every 500 ms. If no key is pressed, the interface module sends message frames to the PLC at cyclic intervals. The S3 switches (2 and 3) are used to set this cycle time. In this way, the load on the PLC caused by the interface module can be adjusted.

Settings for receipt cycle time

The machine control panel receives message frames at cyclic intervals from the PLC and answers these at cyclic intervals. The receipt monitoring time is linked to the transmission cycle time of the machine control panel and is set with the S3 DIP switch (2 and 3).

Bus address

The bus address for 840D must be set to "6". Other addresses can be selected, but these must then also be set at FB1 in the basic PLC program.

33.5 Technical specifications

Security			
Safety class	III; PELV acc. to EN 50178		
Degree of protection per EN 60529	IP00		
Approvals	CE / cULus		
Electrical specifications			
Input voltage	DC 24 V		
Power consumption, max.	max. 5 W		
Mechanical data			
Dimensions	Width: 293 mm	Height: 92 mm	Depth: 15 mm
Weight	Approx. 0.5 kg		
Mechanical ambient conditions	**Operation**	**Transport** (in transport packaging)	
Vibratory load	10 – 58 Hz: 0.075 mm 58 -200 Hz: 9.8 m/s² 3M4 per EN 60721-3-3	5 -9 Hz: 3.5 mm 9 -200 Hz: 9.8 m/s² 2M2 per EN 60721-3-2	
Shock stressing	50 m/s², 30 ms, 18 shocks 3M2 per EN 60721-3-3	300 m/s², 6 ms, 18 shocks 2M2 per EN 60721-3-2	
Climatic ambient conditions			
Cooling	By natural convection		
Condensation, spraying water and icing	Not permitted		
Supply air	Without caustic gases, dusts and oils		
	Operation	**Storage/shipping** (in transport packaging)	
Applicable standards	EN 60721-3-3	EN 60721-3-1 / -3-2	
Climate class	3K5	1K3 / 2K4	
Temperature limits	0 ... 55 ºC	-20 ... 60ºC	
Temperature change	Max. 10 K/h	Max. 18 K/h	
Limits for relative humidity	5 ... 80%	5 ... 95%	
Permissible change in the relative air humidity	max. 0.1% /min		

Electronic handwheels

34

34.1 Description

Electronic handwheels are incremental encoders whose signals correspond to rotation of the wheel actuated by hand.

They are equipped with a magnetic latching mechanism that supports traversing with incremental accuracy. The axis selected via the control can be positioned so that the axes are parallel.

All handwheels have 100 I/U lines.

The electronic handwheels are available in several variants.
They can be distinguished by the interface and size of the front panel.
The snapping torque and size of the setting wheel are adapted to the front plate.
If necessary, the front panel may have to be removed.

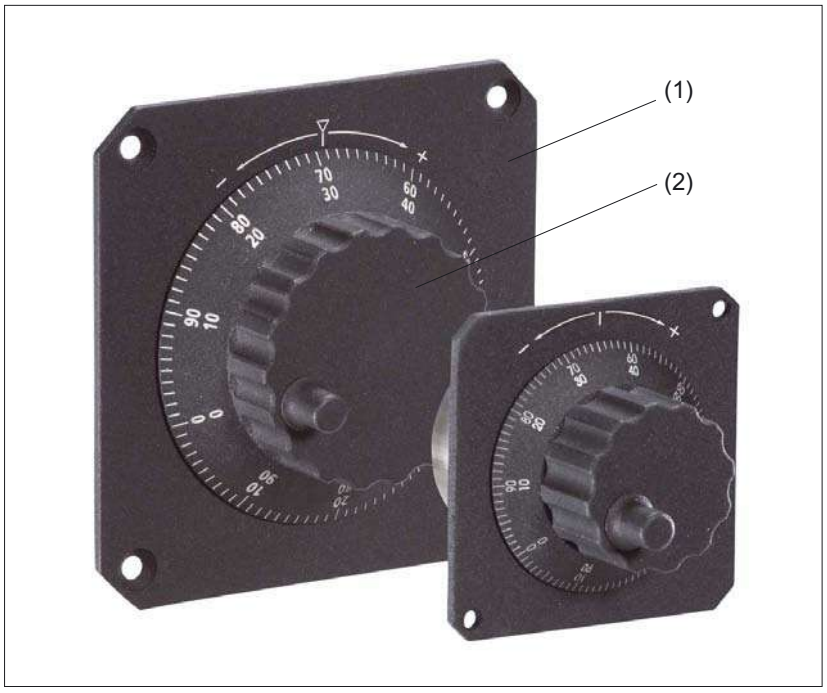

Figure 34-1 View

(1) Front panel
(2) Rotary knob

The portable handwheel is intended for machine level usage. A magnet bracket and spiral cable can be found on its casing.

The electronic handwheel with 24V operating voltage and a HTL signal level is designed for connecting to I/O modules.

An adapter set is available for installing the handwheels with central mounting in front panels which are intended for the installation of handwheels with 3-hole mountings (see section: "Accessories").

Validity

The description applies to the following electronic handwheels:

Name	Dimensions of front panel (mm)	Interface	Order number
Encoder with setting wheel	120 x 120	DC 5V, RS 422	6FC9320-5DB01
Encoder with setting wheel	76.2 x 76.2	DC 5V, RS 422	6FC9320-5DC01
Encoder without setting wheel (for mounting)	without front panel	DC 5V, RS 422	6FC9320-5DF01
Encoder with setting wheel	76.2 x 76.2	DC 24V, HTL	6FC9320-5DH01
Encoder with setting wheel, small	without front panel	DC 5V, RS 422	6FC9320-5DM00

34.2 Connections

Connection for all variants of the electronic handwheel acc. to AWG14:

Connection:	6-pin screw-type terminal
Nominal area	2.5 mm^2 single wire 1.5 mm^2 ultra fine wire

Note

When a connected handwheel triggers pulses from its idle position or in the event of tiny contacts, connect it so that the label is facing the wrong way.

Replace

- the wire of terminal A with the wire of terminal /A
- the wire of terminal B with the wire of terminal /B

34.3 Technical data

Safety		
Protective class	I	
Degree of protection per EN 60529/ IEC 529	Front: IP65	Connection side: IP50
Electrical data		
	Type: 5 V	**Type: 24 V**
Nominal voltage	DC 5 V ± 5%	DC 10 V - 30V
Rated current	Max. 60 mA	Max. 15 mA
Output frequency	Max. 2 kHz	
Number of pulses	2 x 100 I/U	
Displacement of phase A to B	typ. 90° electrical	
Interface	RS 422 (TTL)	HTL
Mechanical data		
Weight	approx. 0.4 kg with 76.2 x 76.2 mm front panel	
	approx. 0.6 kg with 120 x 120 mm front panel	
Housing material	Steel / plastic	
Distance from NCU	25 m	
Actuating force	4 Ncm	
	8 Ncm (variant with 120 x 120 mm front panel)	
Spindle speed	max. 1000 rpm	
Mechanical ambient conditions	**Operation**	**Transport** (in transport packaging)
Vibratory load	58 – 200 Hz: 10 m/s^2	9 -200 Hz: 20 m/s^2
Shock stressing	100 m/s^2, 11 ms, 6 shocks per IEC 68-2-27	300 m/s^2, 6 ms, 6 shocks per IEC 68-2-27
Climatic ambient conditions		
Condensation, spraying water and icing	Not permissible	
Supply air	Without caustic gases, dusts and oils	
	Operation	**Storage / shipping** (in transport packaging)
Applicable standards	EN 60721-3-3	EN 60721-3-2
Climate class	3K5	2K4
Temperature limits	0 ... 70ºC	-40 ... 85 ºC
Temperature change	Max. 10 K/h	Max. 15 K/h
Limits for relative humidity	5 ... 80%	10 ... 95%
Permissible change in the relative air humidity	Max. 6%/h	

34.4 Accessories

The following adapter set is available for installing the handwheels with central mounting in front panels which are intended for the installation of handwheels with 3-hole mountings:

Component	Description	Number	Order number
Adapter set	For installation with 3-hole mounting	1	6FC9320-5DN00

The figures show the adapter set with its individual parts and the dimension drawing for mounting.

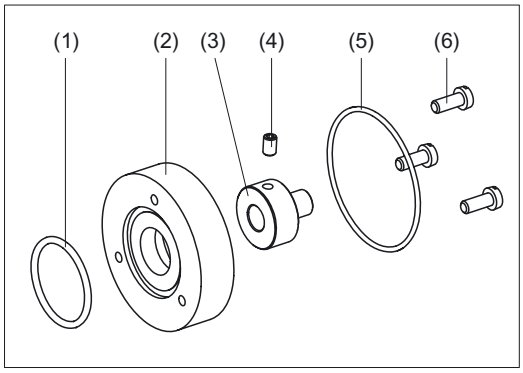

Figure 34-2 Components of adapter set

(1) O-ring
(2) Adapter ring
(3) Axle adapter
(4) Threaded stud
(5) O-ring
(6) Cylinder-head screw

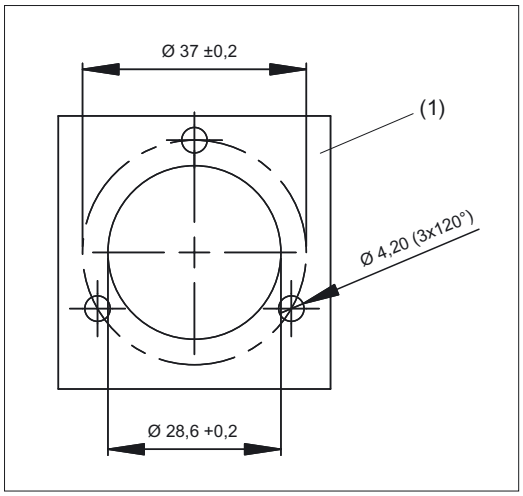

Figure 34-3 Dimension drawing of adapter set

(1) Mounting frame

34.5 Dimensional drawings

34.5.1 Encoder with 120 mm x 120 mm front panel, setting wheel (...-5DB01)

Front and side view

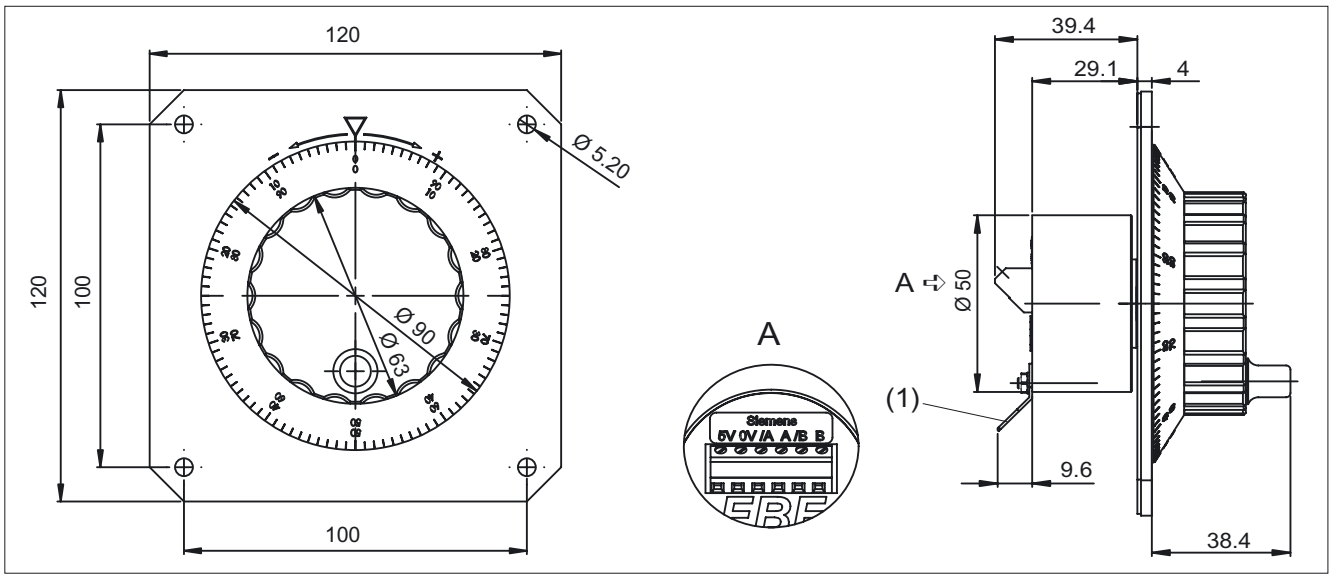

(1) Flat connector for push-on contacts 6.3 mm

Outputs

A = Antivalent
RS 422 A

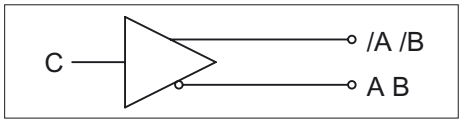

Load current ≦ 20 mA

Pulse diagram

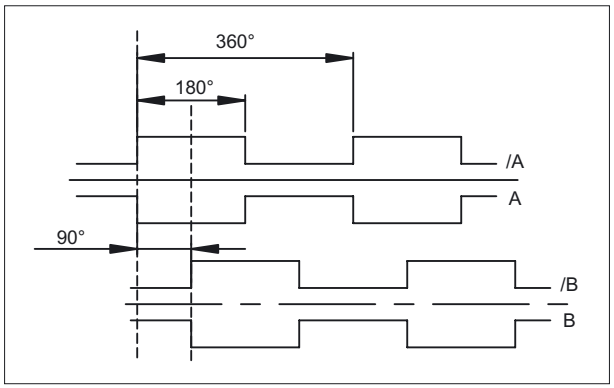

34.5.2 Encoder with front panel, 76.2 mm x 76.2 mm, setting wheel (...-5DC01)

Front and side view

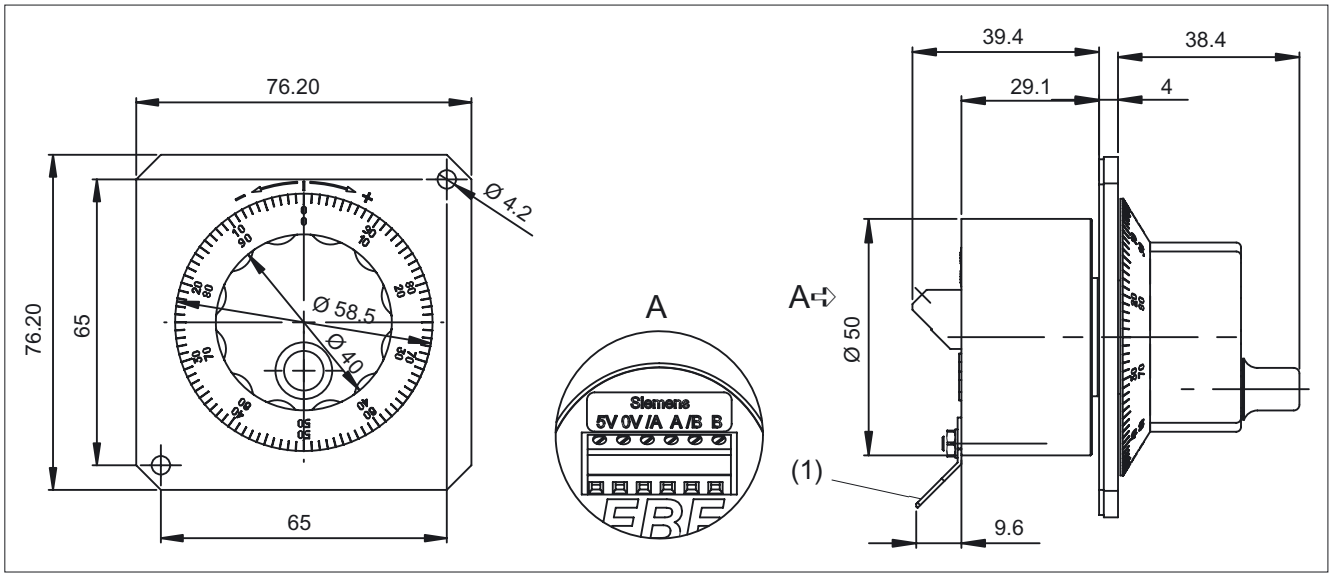

(1) Flat connector for push-on contacts 6.3 mm

Outputs

A = Antivalent
RS 422 A

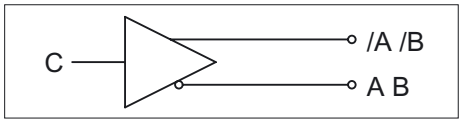

Load current ≦ 20 mA

Pulse diagram

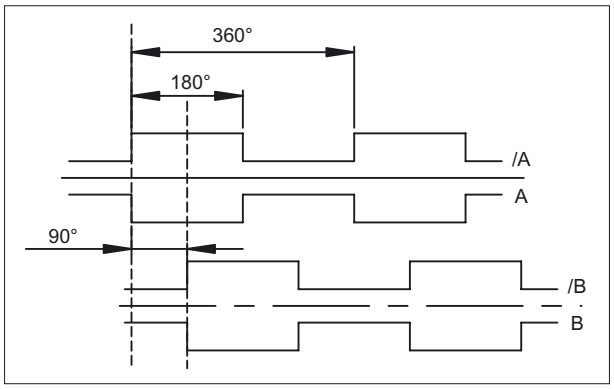

34.5.3 Encoder without front panel, without setting wheel, mounting (...-5DF01)

Front and side view

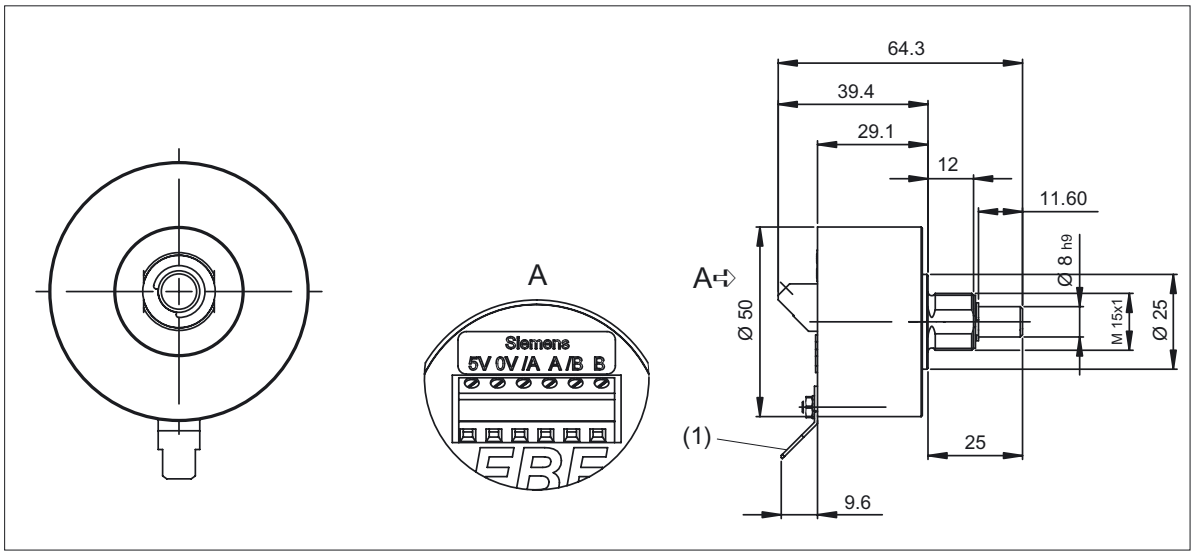

(1) Flat connector for push-on contacts 6.3 mm

Switch panel cutout for mounting version

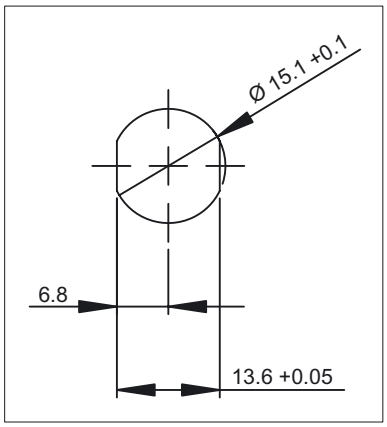

Outputs

A = Antivalent
RS 422 A

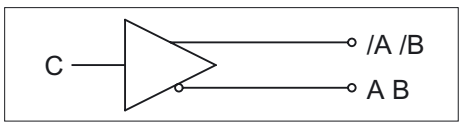

Load current ≦ 20 mA

Pulse diagram

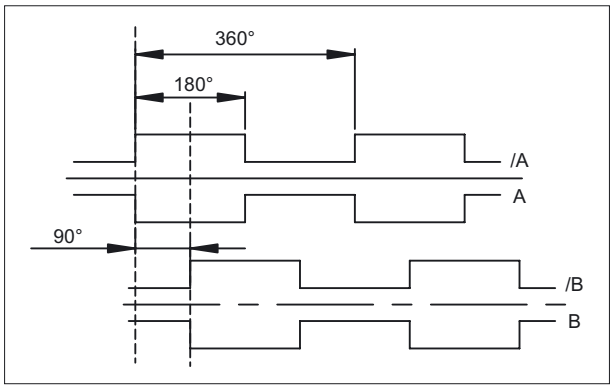

34.5.4 Encoder with front panel, 76.2 mm x 76.2 mm, setting wheel (...-5DH01)

Front and side view

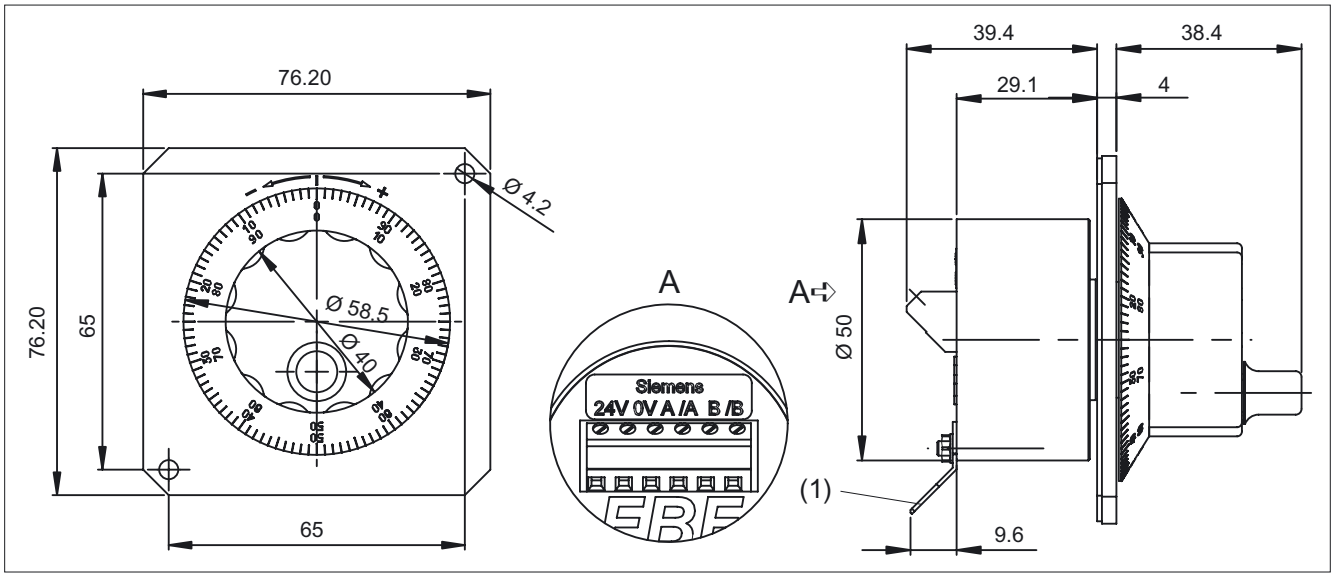

(1) Flat connector for push-on contacts 6.3 mm

Outputs

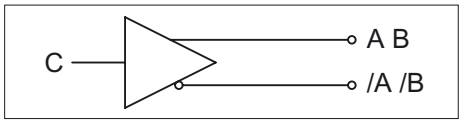

Load current ≦ 10 mA

Pulse diagram

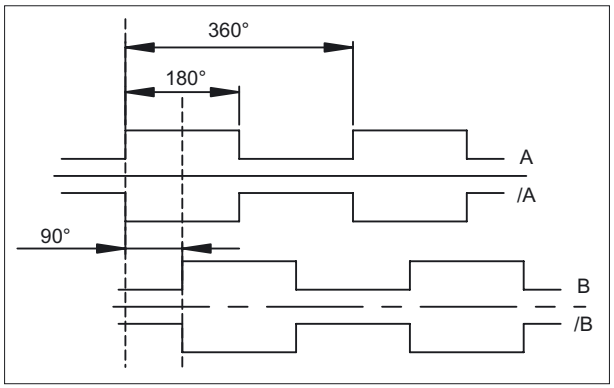

34.5.5 Encoder without front panel, setting wheel, small (...-5DM00)

Components

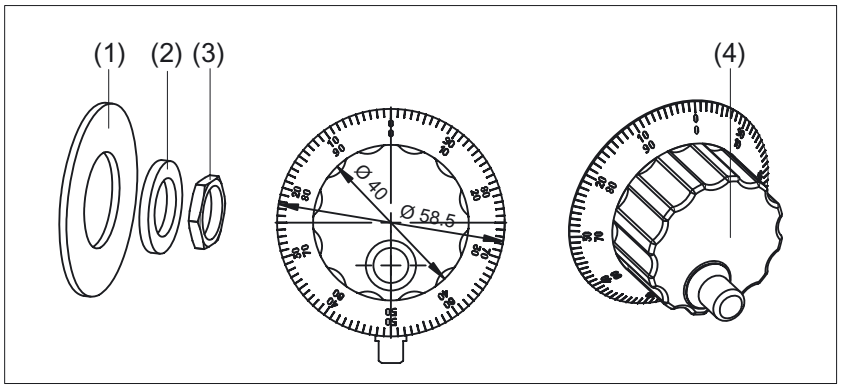

(1) Seal disc
(2) Washer
(3) Nut
(4) Rotary button with crank

Side view

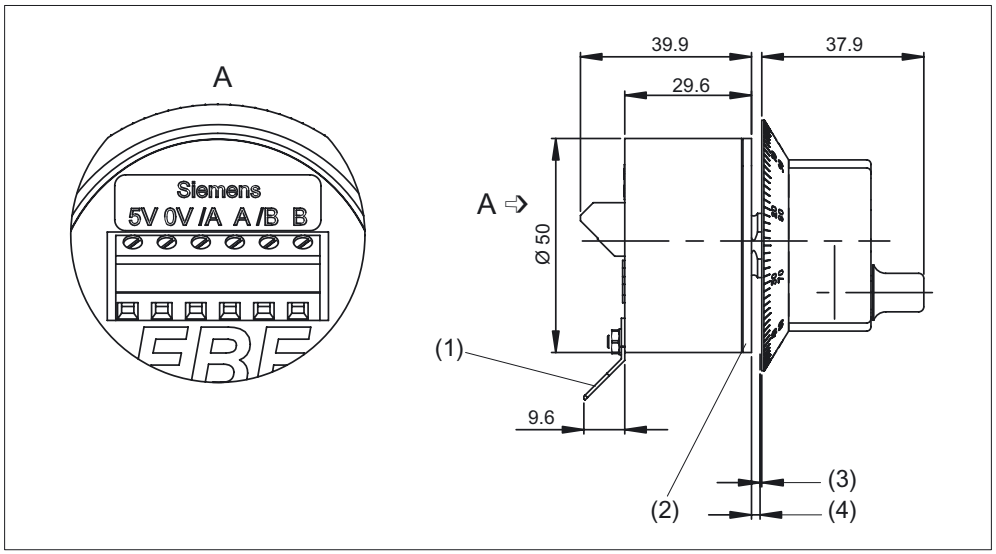

(1) Flat connector for push-on contacts 6.3 mm
(2) Seal disc
(3) Recommended distance of 0.40 mm switch panel / rotary button
(4) Switch panel thickness 2 to max. 6 mm

Switch panel cutout for mounting version

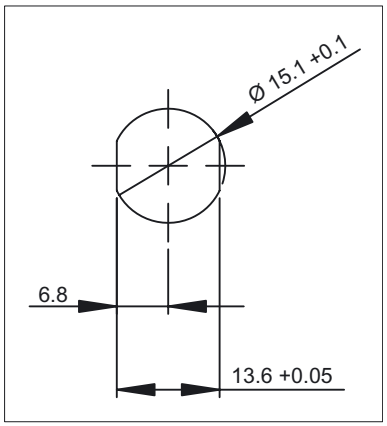

Outputs

A = Antivalent
RS 422 A

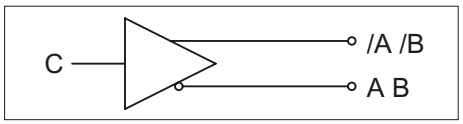

Load current ≦ 20 mA

Pulse diagram

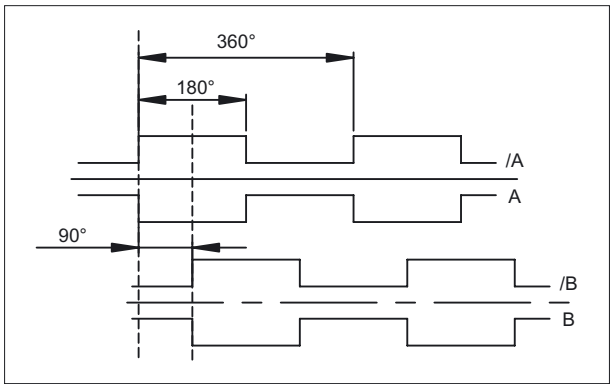

Full CNC keyboard: KB 483C

35

35.1 Description

The SINUMERIK KB 483C full CNC keyboard permits user-friendly input of programs and text.

It is fitted with short-stroke keys.

The key layout is predefined and cannot be modified, i.e. the key caps cannot be transposed.

The keyboard is secured from the rear using special clamps supplied with the panel.

Validity

The following description applies to the component:

Name	Key type	Order number
CNC full keyboard KB 483C	mechanical	6FC5203-0AF20-0AA1

Features

- Keys
  - 78 mechanical keys in standard/US QWERTY layout
- Key groups
  - Alphabetic key group with special characters
  - Numeric key group with special characters
  - Cursor key group
  - CNC function keys with hot keys for fast selection of the control area
- Connections
  - USB 1.1

35.2 Operating and display elements

Key assignments



Figure 35-1 Layout of CNC full keyboard KB 483C

Keyboard codes

The key codes assigned to the relevant node in the matrix are stored in the keyboard table. When a key is actuated, the appropriate code is read from the table and sent to the PCU.

Note

The keyboard does not support Suspend mode or a Remote Wakeup function.

1. Keyboard level					2. Keyboard level			
Labeling	Key function on standard PC keyboard	Shift key	USB code		Labeling	Key function on standard PC keyboard	Shift key	USB code
q	q	none Switchover Key	14		Q	Q	SHIFT	14
w	w		1a		W	W		1a
e	e		08		E	E		08
r	r		15		R	R		15
t	t		17		T	T		17
y	y		1c		Y	Y		1c
u	u		18		U	U		18
i	i		0c		I	I		0c
o	o		12		O	O		12
p	p		13		P	P		13
a	a		04		A	A		04
s	s		16		S	S		16
d	d		07		D	D		07
f	f		09		F	F		09
g	g		0a		G	G		0a

1. Keyboard level				2. Keyboard level			
Labeling	**Key function on standard PC keyboard**	**Shift key**	**USB code**	**Labeling**	**Key function on standard PC keyboard**	**Shift key**	**USB code**
h	h		0b	H	H		0b
j	j		0d	J	J		0d
k	k		0e	K	K		0e
l	l		0f	L	L		0f
z	z		1d	Z	Z		1d
x	x		1b	X	X		1b
c	c		06	C	C		06
v	v		19	V	V		19
b	b		05	B	B		05
n	n		11	N	N		11
m	m		10	M (GND)	M (GND)		10
'	'		34	"	"		34
*	*	SHIFT	25			none	35
[	[		2f	{	{		2f
]	]		30	}	}		30
\	\		31	|	|		31
,	,		36	<	<		36
;	;		33	:	:		33
space character	space character		2c	+/-	~		2c
1	1		1e	!	!		1e
2	2		1f	@	@		1f
3	3		20	#	#	SHIFT	20
4	4		21	$	$		21
5	5		22	%	%		22
6	6	none Switchover Key	23	^	^&		23
7	7		24	&	&		24
8	8		25	*	*		25
9	9		26	(	(		26
0	0		27	)	)		27
-	-(NB)		56	_			56
.	.		37	>	>		37
/	/		38	?	?		38
=	=		2e	Do not use			
+	+		57	~	~		35
BACKSPACE	BACKSPACE		2a	BACKSPACE	Shift BACKSPACE		2a
DEL	DEL		4c	DEL	Shift DEL	SHIFT	4c
INSERT	INSERT		49	INSERT	Shift INSERT		49
INPUT	RETURN		28	INPUT	Shift RETURN		28
TAB	TAB RIGHT		2b	TAB	TAB LEFT		2b

1. Keyboard level				2. Keyboard level			
Labeling	**Key function on standard PC keyboard**	**Shift key**	**USB code**	**Labeling**	**Key function on standard PC keyboard**	**Shift key**	**USB code**
ALARM CANCEL	ESC		29	Do not use			
HELP	F12		45				
CHANNEL	F11		44				
MACHINE	Shift F11	SHIFT	44				
PROGRAM MANAGER	7 (NB)	No Shift key	5f				
PROGRAM	1 (NB)		59				
ALARM	9 (NB)		61				
OFFSET	3 (NB)		5b				
CUSTOM	Shift F12	SHIFT	45				
NEXT WINDOW	Home	none Switchover Key	4a	NEXT WINDOW	Shift Home	SHIFT	4a
END	END		4d	END	Shift END		4d
PAGE UP	Page up		4b	PAGE UP			4b
PAGE DOWN	Page Down		4e	PAGE DOWN			4e
SELECT	5 (NB)		5d	Do not use			
CURSOR UP	Cursor up		52	CURSOR UP	Shift Cursor up	SHIFT	52
CURSOR DOWN	Cursor down		51	CURSOR DOWN	Shift Cursor down		51
CURSOR RIGHT	Cursor right		4f	CURSOR RIGHT	Shift Cursor right		4f
CURSOR LEFT	Cursor left		50	CURSOR LEFT	Shift Cursor left		50
CTRL	Control	CONTROL		CTRL	Shift Control	SHIFT CONTROL	
ALT	Alt	ALT		ALT	Shift Alt	SHIFT ALT	
SHIFT	Shift	SHIFT					

35.3 Interfaces

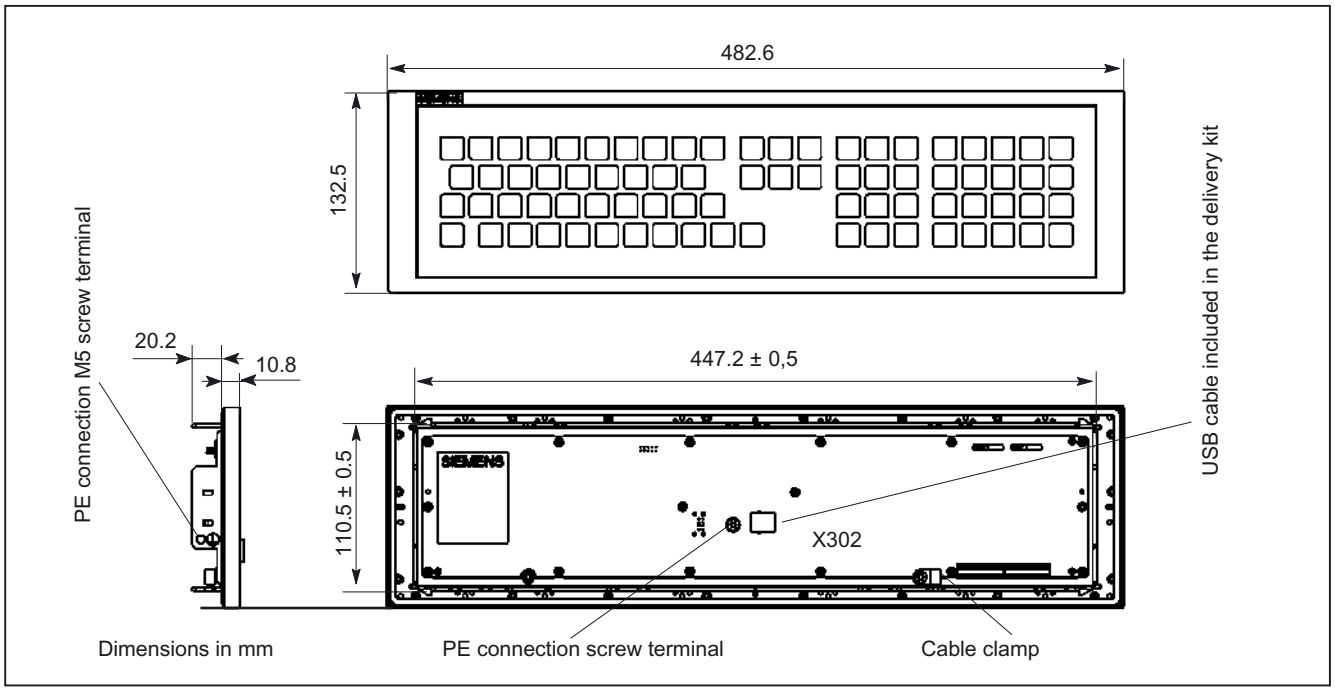

Figure 35-2 Front, side and rear views of CNC full keyboard KB 483C

USB upstream port X302

The interface (see Fig.) is designed as a "high powered interface" (5 V/500 mA). As a result, the keyboard can be connected only to USB hubs which possess their own power supply and whose downstream ports are capable of supplying a 500 mA current. A standard USB 2.0 cable of max. 3 m in length (recommended: 1.5 m) is supported.

Connector designation:	**X302**
Plug-connector type:	USB-B connector (4-pin)

For pin assignment see section: "Connection Conditions", section: "Secondary electrical conditions"

35.4 Mounting

Panel cutout

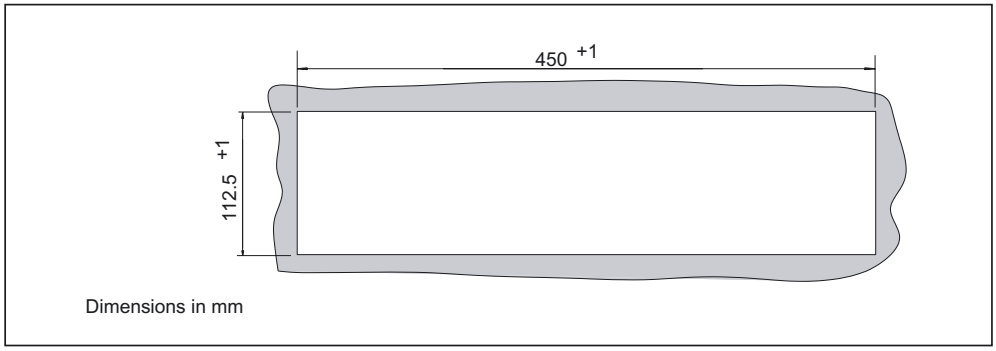

Figure 35-3 Panel cutout for CNC full keyboard KB 483C (plate thickness 1.5 - 6.0 mm)

Dimension drawing

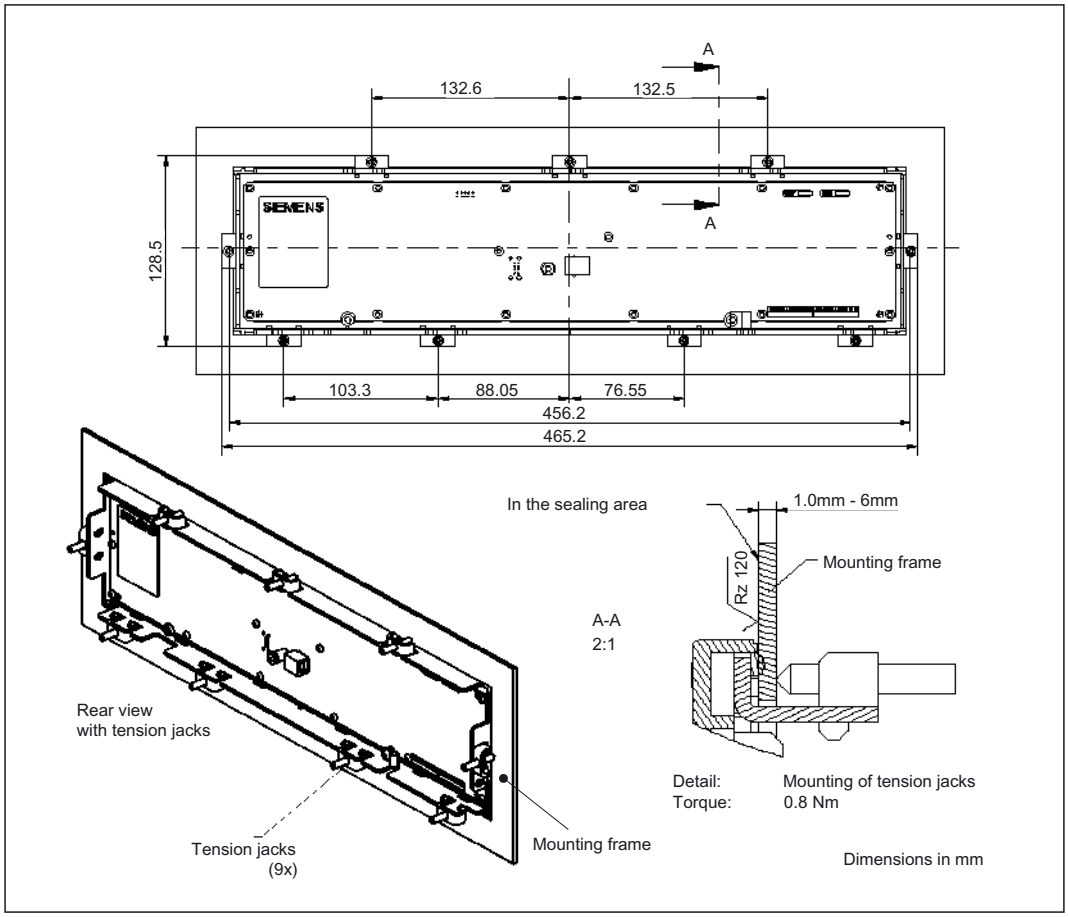

Figure 35-4 Dimension drawing for mounting the CNC full keyboard KB 483C

Mounting position

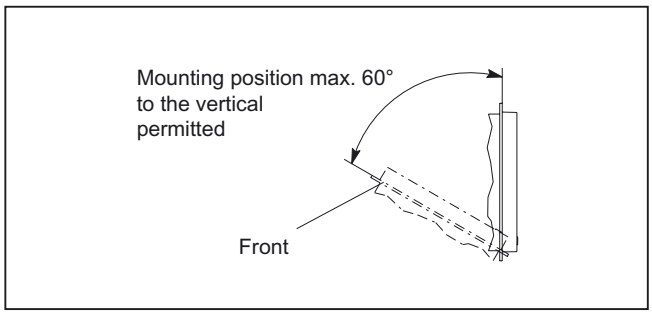

Figure 35-5 Mounting position

35.5 Technical data

Safety			
Protective class / approvals	III; PELV acc. to EN 50178 / CE		
Degree of protection per EN 60529 (IEC 60529)	Front panel IP54	Rear side IP 00	Fusing to cabinet: IP65
Noise immunity			
ESD	Air discharge ± 8 kV / contact discharge ± 4 kV		
HF radio	10 V/m, 80% AM, 1 kHz / 80 -1000 MHz		
HF conducted (on USB cable)	10 V, 80% AM, 1 kHz / 0.15 - 80 MHz		
Electrical data			
Supply volt. / current (typ.)	4,75, ... 5.25 V/102 mA		
Power consumption, max.	0.4 W		
Mechanical data			
Dimensions	Width: 483 mm Height: 133 mm	Depth: 31 mm Mounting depth: 20.2 mm	
Weight	approx. 1.3 kg		
Max. distance from PCU	3 m (recommended: 1.5 m)		
Basic color of casing	Anthracite 614		
Key color	Pastel turquoise RAL 6034, pantone yellow light basic 700, medium basic 701		
Mechanical ambient conditions	**Operation**	**Transport** (in transport packaging)	
Vibratory load	10 – 58 Hz: 0.015 mm 58 – 200 Hz: 19.6 m/s^2 3M4 per EN 60721-3-3	5 – 9 Hz: 3.5 mm 9 – 200 Hz: 9.81 m/s^2 2M2 per EN 60721-3-2	
Shock stressing	150 m/s^2, 11 ms, 18 shocks 3M2 per EN 60721-3-3	150 m/s^2, 11 ms, 18 shocks 2M2 per EN 60721-3-2	
Climatic ambient conditions			
Heat dissipation	By natural convection		
Condensation, spraying water and icing	Not permissible		
Supply air	Without caustic gases, dusts and oils		
	Operation	**Storage/shipping** (in transport packaging)	
Applicable standards	EN 60721-3-3	EN 60721-3-1 / -3-2	
Climate class	3K5	1K3 / 2K4	
Temperature limits	0 ... 45 ºC (at front) 0 ... 55 ºC (at rear)	-25 ... 55 ºC	
Temperature change	Max. 10 K/h	Max. 18 K/h	
Limits for relative humidity	5 ... 80% at 25°C	5 ... 95% at 25°C	
Permissible change in the relative air humidity	max. 0.1% /min		

35.6 Accessories

Set of tension jacks

Component	Description	Number	Order number
Set of tension jacks	for supplementary components with 2.5 mm profile, length: 20 mm	Set of 9	6FC5248–0AF14–0AA0

Full CNC keyboard: KB 310C

36

36.1 Description

The SINUMERIK KB 310C full CNC keyboard permits user-friendly input of programs and text.

It is equipped with short-stroke keys.

The key layout is predefined and cannot be modified, i.e. the key caps cannot be transposed.

The keyboard is secured from the rear using special clamps supplied with the panel.

Validity

The following description applies to the component:

Name	Keyboard	Order number
CNC full keyboard KB 310C	mechanical	6FC5203-0AF21-0AA1

Features

- Keys
  - Standard/US QWERTY layout
  - 75 mechanical keys
- Key groups
  - Alphabetic key group with special characters
  - Numeric key group with special characters
  - Cursor key group
  - CNC function keys with hot keys for fast selection of the control area
- Connections
  - USB 1.1

36.2 Operating and display elements

Key assignments



Figure 36-1 Layout of CNC full keyboard KB 310C

Keyboard codes

For keyboard codes can be found in section: "CNC full keyboard KB 483C", section: "Operating and display elements".

36.3 Interfaces

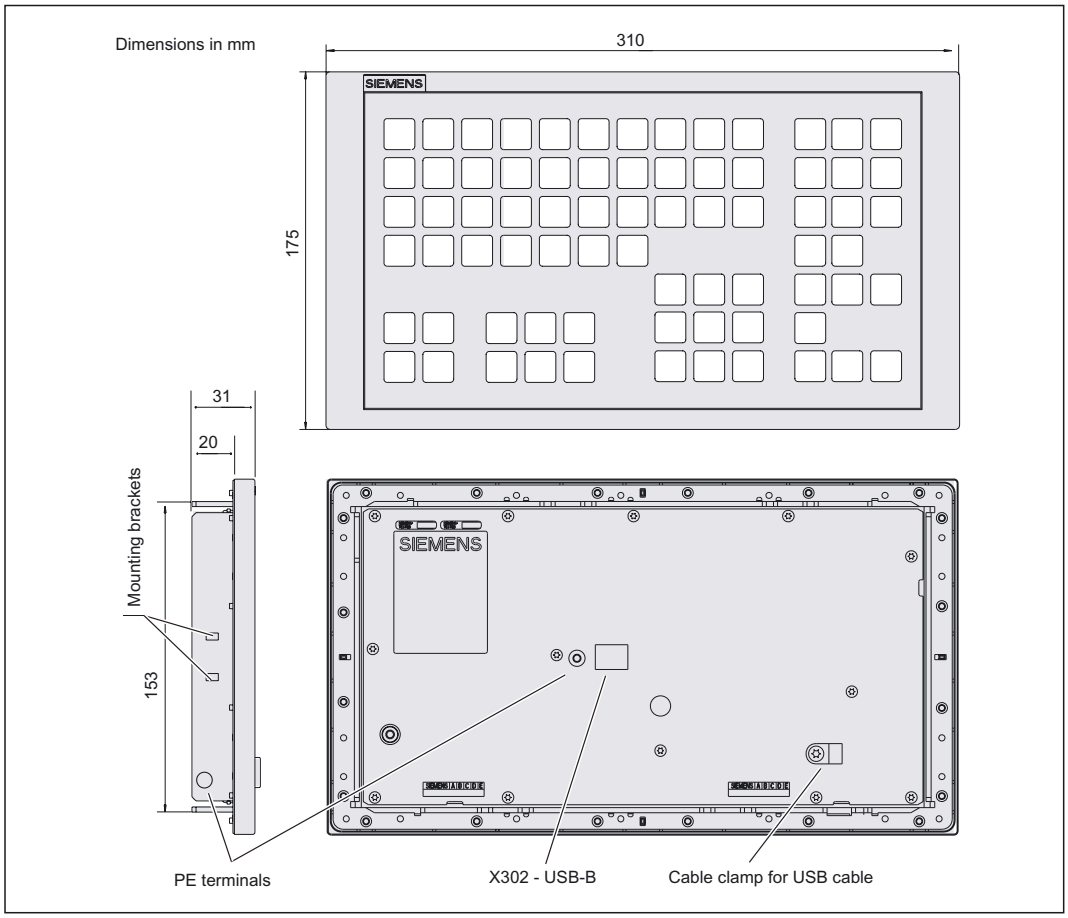

Figure 36-2 Front, side and rear views of CNC full keyboard KB 310C

USB upstream port X302

The interface (see Fig.) is designed as a "high powered interface" (5 V/500 mA). As a result, the keyboard can be connected only to USB hubs which possess their own power supply and whose downstream ports are capable of supplying a 500 mA current. A standard USB 2.0 cable of max. 3 m in length (recommended: 1.5 m) is supported.

Connector designation:	**X302**
Plug-connector type:	USB-B connector (4-pin)

For pin assignment see section: "Connection Conditions", section: "Secondary electrical conditions"

36.4 Mounting

Note

When mounting, install and secure the USB connecting cable properly to ensure that it cannot chafe against the frame of the keyboard.

Panel cutout

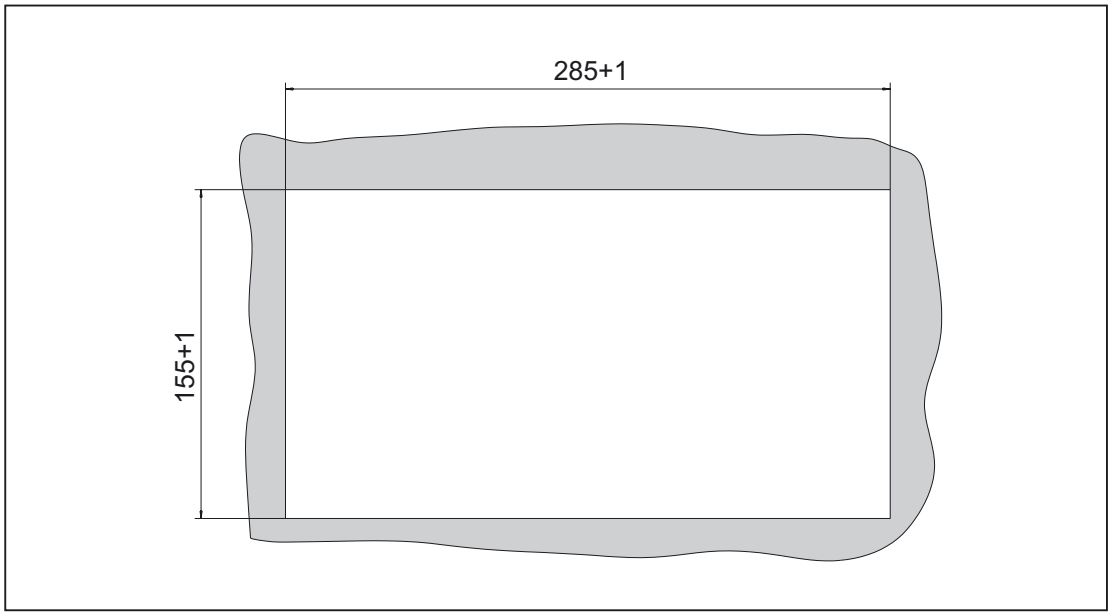

Figure 36-3 Panel cutout for CNC full keyboard KB 310C (plate thickness 1.5 - 6.0 mm)

Dimension drawing for mounting

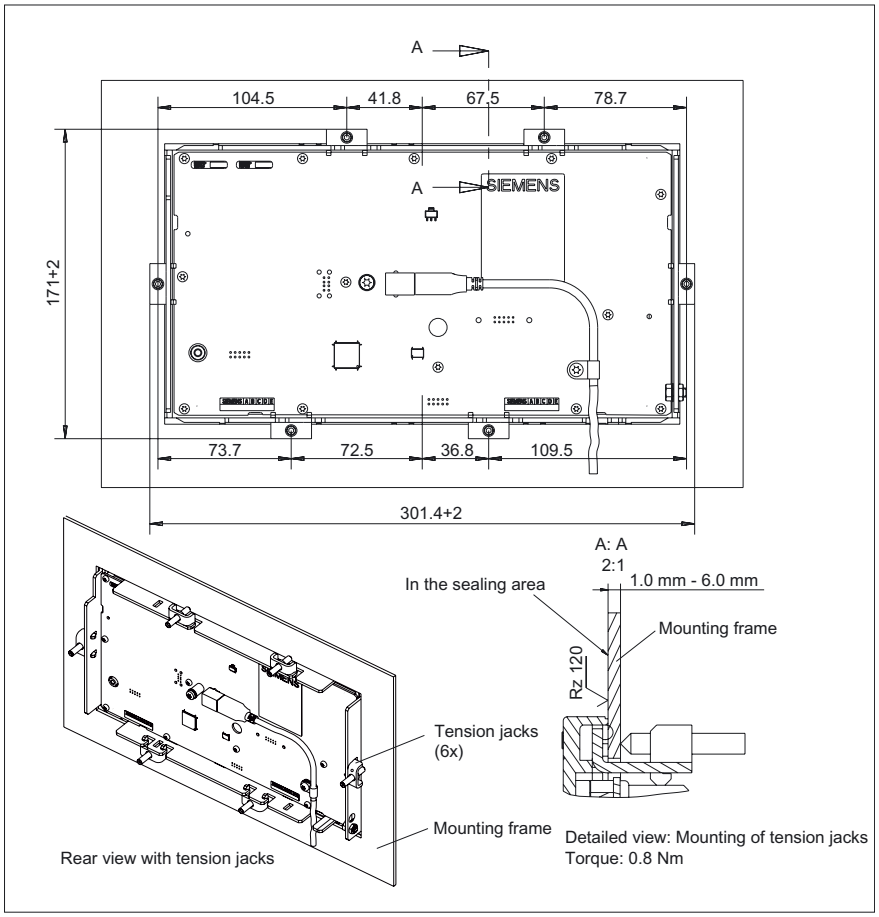

Figure 36-4 Dimension drawing for mounting the CNC full keyboard KB 310C

Mounting position

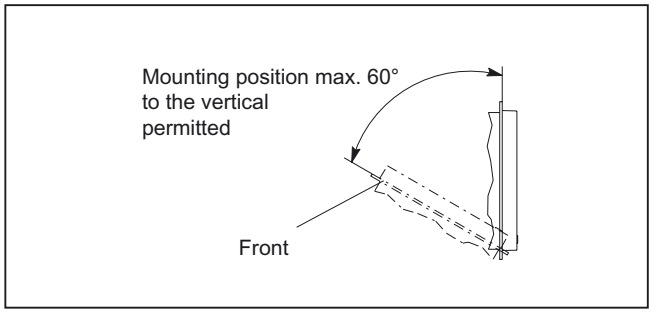

Figure 36-5 Mounting position

36.5 Technical data

Safety			
Protective class / approvals	III; PELV acc. to EN 50178 / CE		
Degree of protection as per EN 60529	Front panel IP54	Rear side IP 00	Fusing to cabinet: IP65
Noise immunity			
ESD	Air discharge ± 8 kV / contact discharge ± 4 kV		
HF radio	10 V/m, 80% AM, 1 kHz / 80 -1000 MHz		
HF conducted (on USB cable)	10 V, 80% AM, 1 kHz / 0.15 - 80 MHz		
Electrical data			
Supply volt. / current (typ.)	4,75, ... 5.25 V/102 mA		
Power consumption, max.	0.4 W		
Mechanical data			
Dimensions	Width: 310 mm Height: 175 mm	Depth: 31 mm Mounting depth: 20 mm	
Weight	approx. 0.9 kg		
Max. distance from PCU	3 m (recommended: 1.5 m)		
Basic color of casing	Anthracite 614		
Key color	Pastel turquoise RAL 6034, pantone yellow light basic 700, medium basic 701		
Mechanical ambient conditions	**Operation**	**Transport** (in transport packaging)	
Vibratory load	10 – 58 Hz: 0.015 mm 58 – 200 Hz: 19.6 m/s^2 3M4 per EN 60721-3-3	5 – 9 Hz: 3.5 mm 9 – 200 Hz: 9.81 m/s^2 2M2 per EN 60721-3-2	
Shock stressing	150 m/s^2, 11 ms, 18 shocks 3M2 per EN 60721-3-3	150 m/s^2, 11 ms, 18 shocks 2M2 per EN 60721-3-2	
Climatic ambient conditions			
Heat dissipation	By natural convection		
Condensation, spraying water and icing	Not permissible		
Supply air	Without caustic gases, dusts and oils		
	Operation	**Storage/shipping** (in transport packaging)	
Applicable standards	EN 60721-3-3	EN 60721-3-1 / -3-2	
Climate class	3K5	1K3 / 2K4	
Temperature limits	0 ... 45 ºC (at front) 0 ... 55 ºC (at rear)	-20 ... 55 ºC	
Temperature change	Max. 10 K/h	Max. 18 K/h	
Limits for relative humidity	5 ... 80% at 25°C	5 ... 95% at 25°C	
Permissible change in the relative air humidity	max. 0.1% /min		

36.6 Accessories

Set of tension jacks

Component	Description	Number	Order number
Set of tension jacks	for supplementary components with 2.5 mm profile, length: 20 mm	Set of 9	6FC5248–0AF14–0AA0

Full CNC keyboard: OP 032S

37

37.1 Description

Validity

The following description applies to the full CNC keyboard OP 032S
(**Order No. 6FC5203–0AC00–1AA0**)

Features

- Keys
  - Standard/US QWERTY layout
  - 74 mechanical keys
- Key groups
  - Alphabetic key group with special characters
  - Numeric key group with special characters
  - Cursor key group
  - NC function keys

37.2 Operator controls and indicators

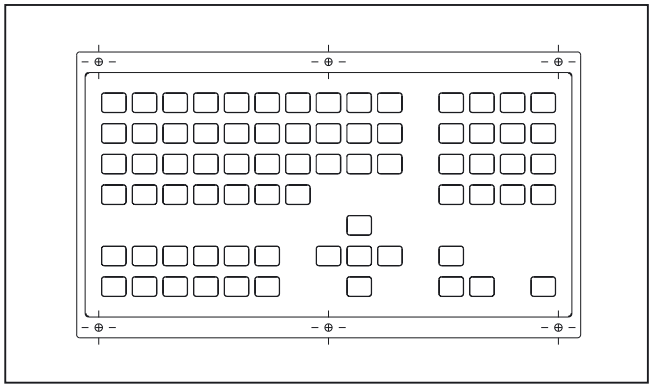

Figure 37-1 Front view of CNC full keyboard OP 032S

37.3 Interfaces

PS2 keyboard interface to PCU (X111)

Connector designation:	**X111**
Type:	Mini-DIN connector 6-pole, straight
Cable length to the PCU	max 2.5 m

37.4 Mounting

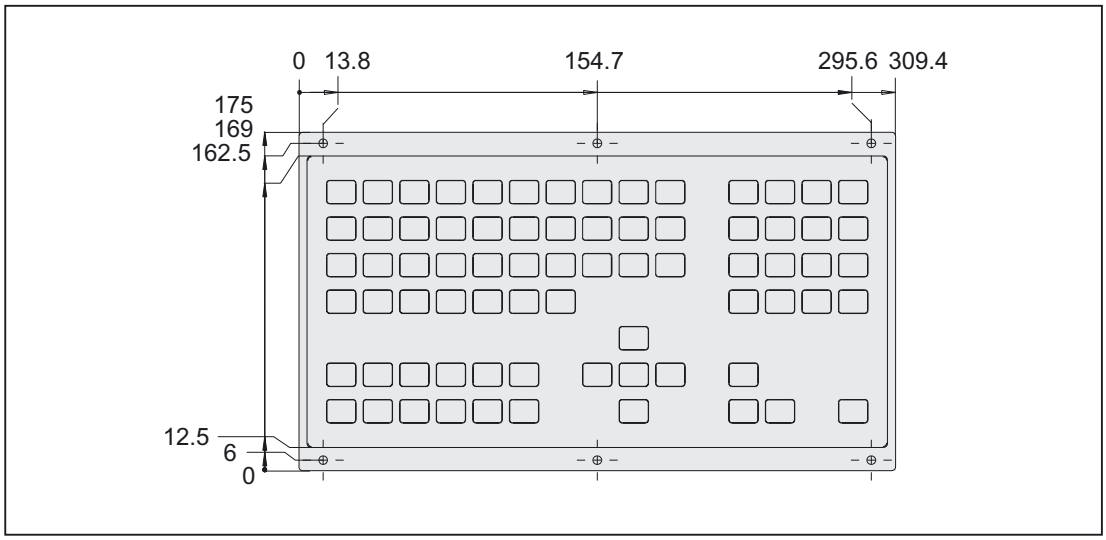

Figure 37-2 Dimension drawing of full CNC keyboard OP 032S

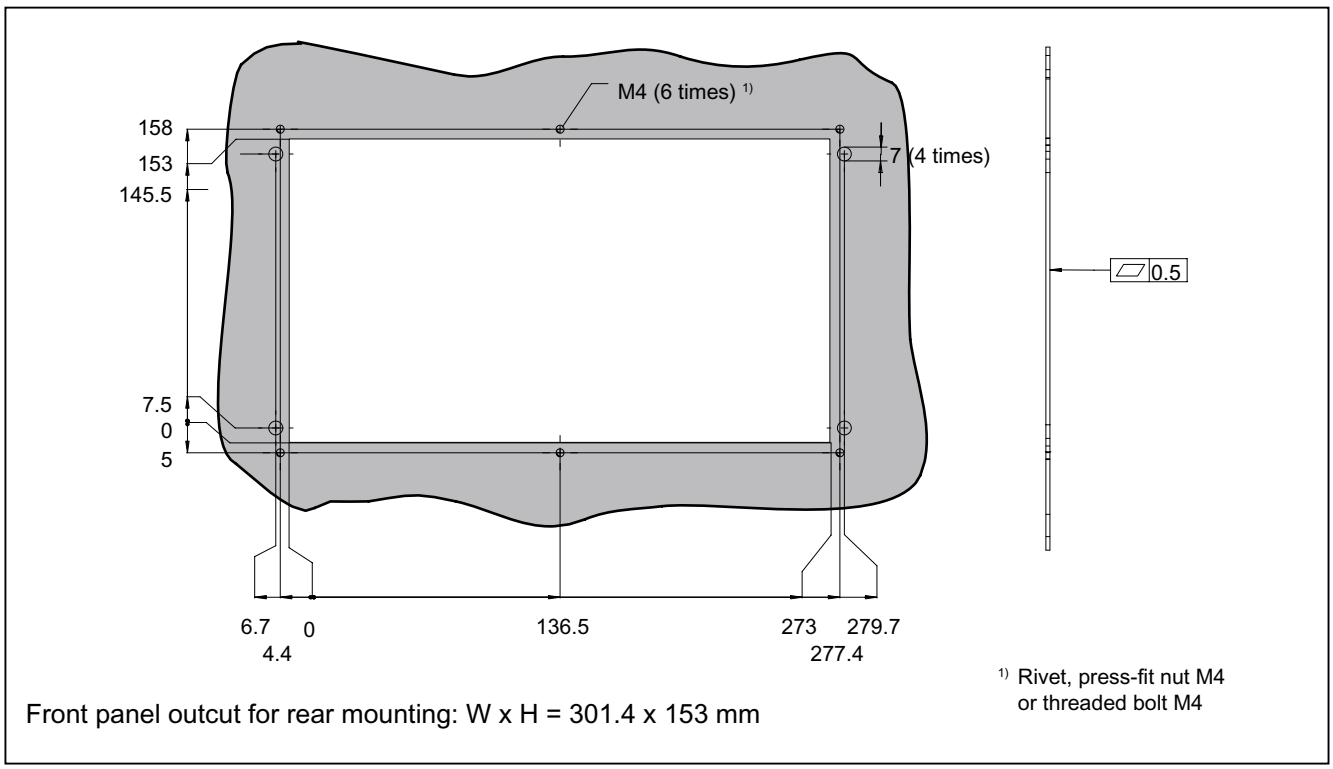

Figure 37-3 Panel cutout for CNC full keyboard OP 032S (rear view)

37.5 Technical specifications

Security			
Protective class / approvals	III; PELV acc. to EN 50178 / CE		
Degree of protection per EN 60529	Front panel IP54	Rear side IP20	
Interference immunity			
ESD	Air discharge ± 8 kV / contact discharge ± 4 kV		
HF radio	10 V/m, 80% AM, 1 kHz / 80 -1000 MHz		
Burst (on USB cable)	± 2.5 kV, 5/50 ns, 5 kHz		
HF conducted	10 V, 80% AM, 1 kHz / 0.15 - 80 MHz		
Electrical specifications			
Supply volt. / current (typ.)	4.75, ... 5.25 V/80 mA		
Power consumption, max.	0.4 W		
Mechanical data			
Dimensions	Width: 310 mm	Height: 175 mm	Depth: 24 mm
Weight	Approx. 1.3 kg		
Mechanical ambient conditions	**Operation**	**Transport** (in transport packaging)	
Vibratory load	10 -58 Hz: 0.015 mm 58 -200 Hz: 19.6 m/s^2 3M4 per EN 60721-3-3	5 -9 Hz: 3.5 mm 9 -200 Hz: 9.81 m/s^2 2M2 per EN 60721-3-2	
Shock stressing	150 m/s^2, 11 ms, 18 shocks 3M2 per EN 60721-3-3	150 m/s^2, 11 ms, 18 shocks 2M2 per EN 60721-3-2	
Climatic ambient conditions			
Cooling	By natural convection		
Condensation, spraying water and icing	Not permitted		
Supply air	Without caustic gases, dusts and oils		
	Operation	**Storage/shipping** (in transport packaging)	
Applicable standards	EN 60721-3-3	EN 60721-3-1 / -3-2	
Climate class	3K5	1K3 / 2K4	
Temperature limits	0 ... 45 ºC (at front) 0 ... 55 ºC (at rear)	-25 ... 55 ºC	
Temperature change	Max. 10 K/h	Max. 18 K/h	
Limits for relative humidity	5 ... 80%	5 ... 95%	
Permissible change in the relative air humidity	max. 0.1% /min		

37.6 Accessories

Set of tension jacks

Description	Number	Order No.:
Retaining screws	100 pieces	6FC3998–7BJ10
Labeled key cap	1 set	6FC5248–0AA02–0AA0

Standard PC keyboard KBPC PX US

38

38.1 Description

The standard PC keyboard MF-II combines USB and PS2 technologies, depending on the connecting cable. This professional keyboard has a striking, modern design and useful extra features. For greater ease of use it includes five additional function keys for one-stroke launch of applications. The detachable trackball rest offers ergonomic operation and can simply be removed if space is at a premium. These features make the standard PC keyboard MF-II the ideal choice for professional tasks.

Validity

The description applies to the following components:

Component	Order No.:
SINUMERIK 810D/840D/840C PC standard keyboard (MF–II) incl. 2m PS/2 line (KBPC PX/US; S26381–K340–V110) incl. removable hand rest	6FC5203–0AC01–0AA0

Features

- Compact design with low profile, ergonomic keys, up to 6 characters possible per key
- MF-II compatible, 104/105 key layout
- System compatibility: PS/2 and USB
- Interface: PS/2 or USB, depending on the cable used

  Power On function only with PS/2 cable, ACPI function only with USB cable (T26139-Y3812-V1)
- Operating systems: Windows 3.11/95/NT/XP
- Restricted suitability for industrial use; not intended for permanent use. Only for use in installation and servicing.

38.2 Operator controls and indicators



Figure 38-1 View of standard PC keyboard MF-II

38.3 Technical specifications

Input voltage		+ 5V DC		
Power consumption		max. 0.3 W		
Degree of protection DIN EN 60529 (IEC 60529)		IP20		
Humidity classification in accordance with DIN EN 60721-3-3		Class 3K5 condensation and icing excluded, low air temperature 0 °C		
Permissible ambient temperature		Storage and transportation - 20 ... 50 °C	Operations 15 ... 32 °C	
Weight		Approx. 1 kg		
Dimensions		Width	Height	Depth
	Without trackball rest	474 mm	36 mm	175 mm
	With trackball rest	474 mm	36 mm	248 mm
Product safety		IEC 60959, UL 1950		
Ergonomics		ISO 9241-4/EN 29241-4		
Electromagnetic compatibility		CE certification in accordance with EU Directives 89/336/EEC (EN 55022/B) EN 55024, EN 61000-3-2, EN 61000-3-3		

Standard PC keyboard KBPC CG US

39

39.1 Description

Programs and texts can be edited easily with the KBPC CG US standard PC keyboard.

The standard PC keyboard KBPC CG US is not suitable for industrial use (EMC) and should not be used as a permanent installation. It must be used only for servicing and commissioning.

Validity

The description applies to the following components:

Description	Note	Order No.:
PC standard keyboard KBPC CG US	MF-II compatible, 104 key layout, connection: USB, length of connecting cable: 1.7 m	6FC5203–0AC01–3AA0

Features

- Flat compact design, ergonomic keys
- MF–II compatible, 104 key layout
- System compatibility: USB 1.1, USB 2.0
- Interface: USB

39.2 Operator controls and indicators



Figure 39-1 View of PC standard keyboard: KBPC CG US

39.3 Technical data

Certificates and approvals	FCC, GS, CE, c-tick, cURus		
Input voltage	+ 5.25V DC		
Power consumption	0.1 W		
Degree of protection DIN EN 60529 (IEC 60529)	IP20		
Permissible ambient temperature	Storage and transportation - 20 ... 60 °C	Operations 0 ... 50 °C	
Weight	Approx. 1.3 kg		
Dimensions (mm)	Width: 405	Height: 44	Depth: 180
Electromagnetic compatibility	CE certification in accordance with EU Directives 89/336/EEC (EN 55022/B) EN 55024, EN 61000-3-2, EN 61000-3-3		

Standard PC keyboard KBPC USB US

40

40.1 Description

The standard PC keyboard KBPC USB US with hub has an integrated hub for three US connections. A USB mouse can be connected here. The wrist rest supplied with it supports ergonomic working.

Programs and texts can be edited easily with the standard PC keyboard.

Validity

The description applies to the following components:

Description	Note	Order No.:
KBPC USB US standard PC keyboard	MF-II compatible, 104/105 keyboard layout with integrated hub, connection: USB, length of connecting cable: 1.9 m	6FC5203–0AC01–2AA0

Features

- Flat compact design, ergonomic keys, up to 6 characters possible on one key
- MF–II–compatible, 104/105 keyboard layout with integrated hub
- System compatibility: USB 1.1
- Interface: USB
- The ACPI key replaces the network key and provides the following functions:
  - standby mode and
  - power down
- Operating system: Windows XP
- Restricted suitability for industrial use; not intended for permanent use. Only for use in installation and servicing.

Note

The standard PC keyboard cannot be used in conjunction with the full CNC keyboard.

40.2 Operating and display elements



Figure 40-1 View of KBPC USB

Activation of readiness for operation
Press any key.

Standby mode
To activate standby mode, press the ACPI key for less than 4 seconds.

Power down mode
To activate power down mode, press the ACPI key for more than 4 seconds.

40.3 Technical data

Input voltage	+ 5.25V DC		
Power consumption	max. 0.3 W		
Degree of protection DIN EN 60529 (IEC 60529)	IP20		
Humidity classification in accordance with DIN EN 60721-3-3	Class 3K5 condensation and icing excluded, low air temperature 0 °C		
Permissible ambient temperature	Storage and transportation - 20 ... 50 °C	Operations 15 ... 32 °C	
Weight	Approx. 1 kg		
Dimensions (mm)	Width: 463	Height: 37	Depth: 166
Product security	IEC 60950, UL 1950		
Ergonomics	ISO 9241-4/EN 29241-4		
Electromagnetic compatibility	CE certification in accordance with EU Directives 89/336/EEC (EN 55022/B) EN 55024, EN 61000-3-2, EN 61000-3-3		

Standard PC keyboard KBPC SC US

41

41.1 Description

Programs and texts can be edited easily with the KBPC SC US standard PC keyboard.



Figure 41-1 View of the KBPC SC US

Validity

The description applies to the following components:

Description	Note	Order No.:
KBPC SC US standard PC keyboard		6FC5203–0AC01–1AA0

Features

- Simple operation
- Ergonomic key design and soft pressure point
- High-contrast key labeling
- Restricted suitability for industrial use; not intended for permanent use. Only for use in installation and servicing.

Note

The standard PC keyboard cannot be used in conjunction with the full CNC keyboard.

41.2 Technical specifications

Input voltage	+ 5.25V DC		
Power consumption	max. 0.3 W		
Degree of protection DIN EN 60529 (IEC 60529)	IP20		
Humidity classification in accordance with DIN EN 60721-3-3	Class 3K5 condensation and icing excluded, low air temperature 0 °C		
Permissible ambient temperature	Storage and transportation - 20 ... 50 °C	Operations 15 ... 32 °C	
Weight	Approx. 0.75 kg		
Dimensions (mm)	Width: 463	Height: 35	Depth: 156

Keyboard tray

42

42.1 Description

The extremely stable 19" keyboard tray in anthracite facilitates your work when using a standard external keyboard with an operator panel.

Special screws permit easy attachment of the keyboard tray, and equally easy removal after the work is finished.

If required, a version with an additional removable tray for a mouse is also available.

Validity

The description applies to the following components:

Name	Remarks	Order number
Keyboard tray	for keyboard with 2 collar screws	6FC5247–0AA40–0AA0

View



Figure 42-1 View of keyboard tray

42.2 Technical data

Weight	approx. 1.6 kg	
Dimensions (mm)	Width: 487	Depth: 196

Compact FlashCard

43

43.1 Description

The Compact Flash Card is suitable for archiving user data.

It is suitable as additional memory for user data of the PCU 20 / PCU 50 / PCU 70 (via PC-Card adapter) and has a memory capacity of 512 MB.

Validity

The description below applies to the CompactFlash card
(order number: 6FC5313-4AG00-0AA2

Key statement

View



Figure 43-1 View of Compact FlashCard

43.2 Technical data

Safety			
Degree of protection per EN 60529 (IEC 60529)	IP20		
Mechanical data			
Dimensions (mm)	Width: 43	Height: 3.3	Depth: 37
Weight	12 g		
Climatic ambient conditions			
Condensation, spraying water and icing	Not permissible		
	Operation	**Storage and transportation**	
Applicable standards	EN 60721-3-3	EN 60721-3-1 / -3-2	
Permissible ambient temperature	0 ... 70°C	-25 ... 85°C	
Limits for relative humidity	8 ... 95 %	8 ... 95 %	

3.5" Floppy Disk Drive

44

44.1 Description

The AT-compatible floppy disk drive with lockable front door is used to read and write data from/to 3.5" disks. It can be installed in a customer operator panel front.

Validity

The description below applies to the SINUMERIK 3.5" disk drive
(order number 6FC5235–0AA05–0AA1)

Features

3.5" disk drive, including connecting cable (length: **max. 0.5 m**) for connecting to

- PCU 20
- PCU 50
- PCU 70

View

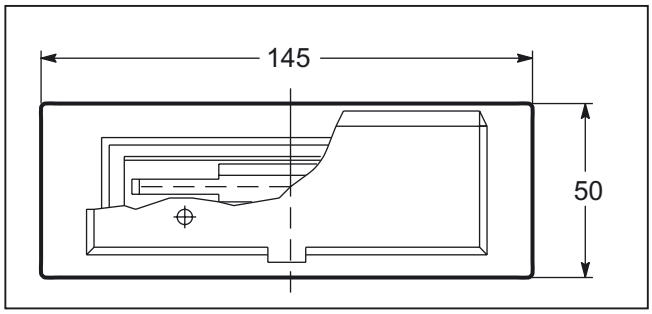

Figure 44-1 Front view

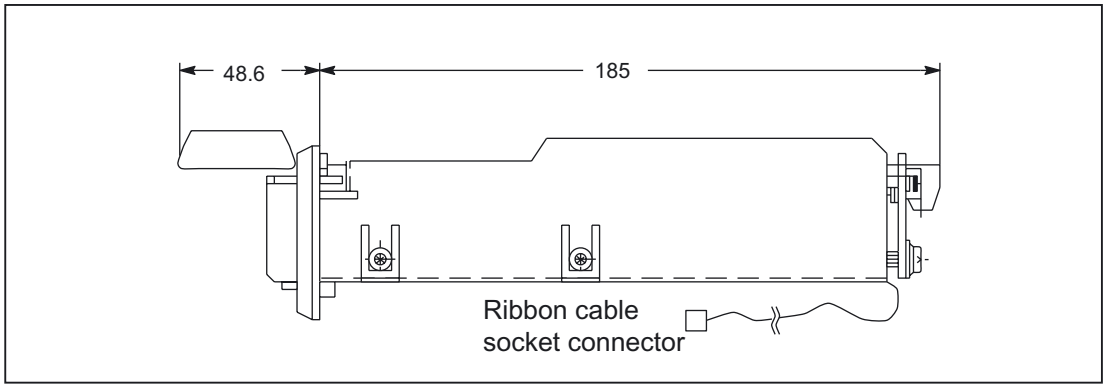

Figure 44-2 Side view (right)

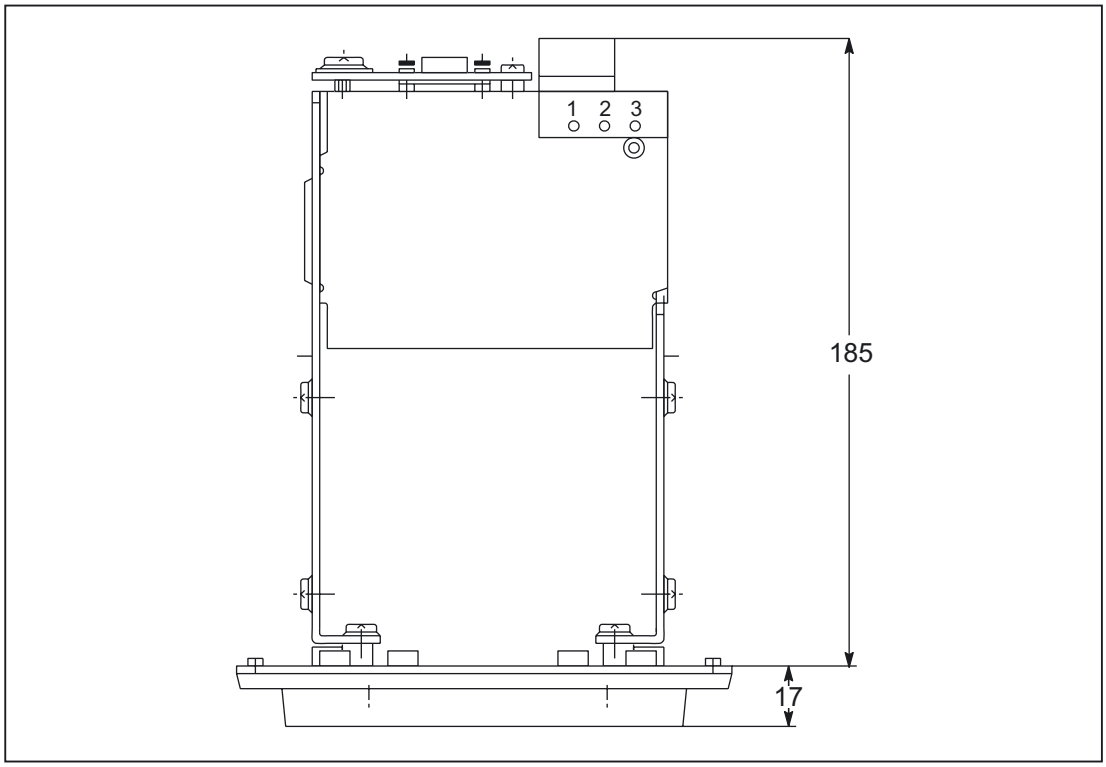

Figure 44-3 Top view

44.2 Interfaces

Power supply interface X121

The power supply interface is located on the rear side of the 3.5" disk drive.

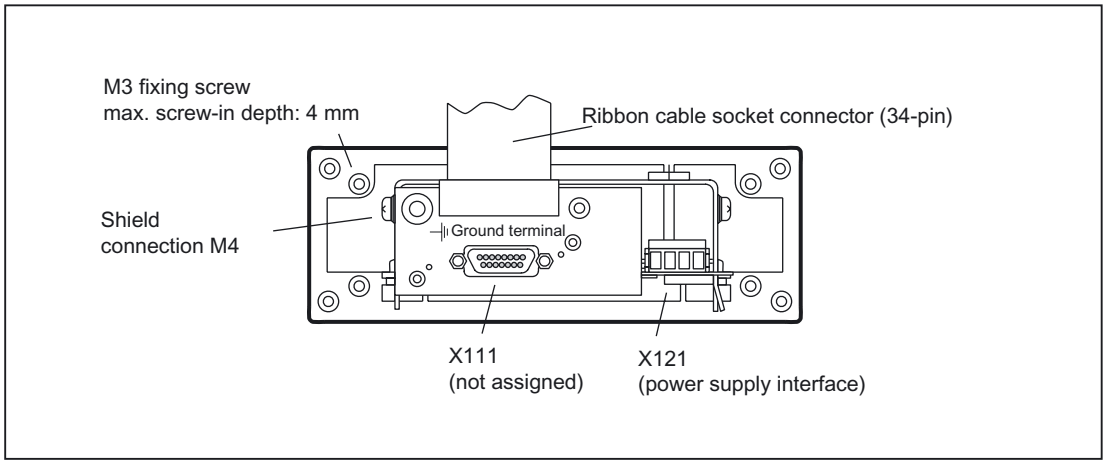

Figure 44-4 Rear view

Connector designation:	**X121**
Type:	3-pin terminal block

Table 44-1 Pin assignments for power supply

Pin	Name	Meaning	Type
1	P24 external	+24 V DC	VI (Voltage Input)
2	M external	Ground	
3	PI	Protective conductor	

44.3 Mounting

Installation instructions

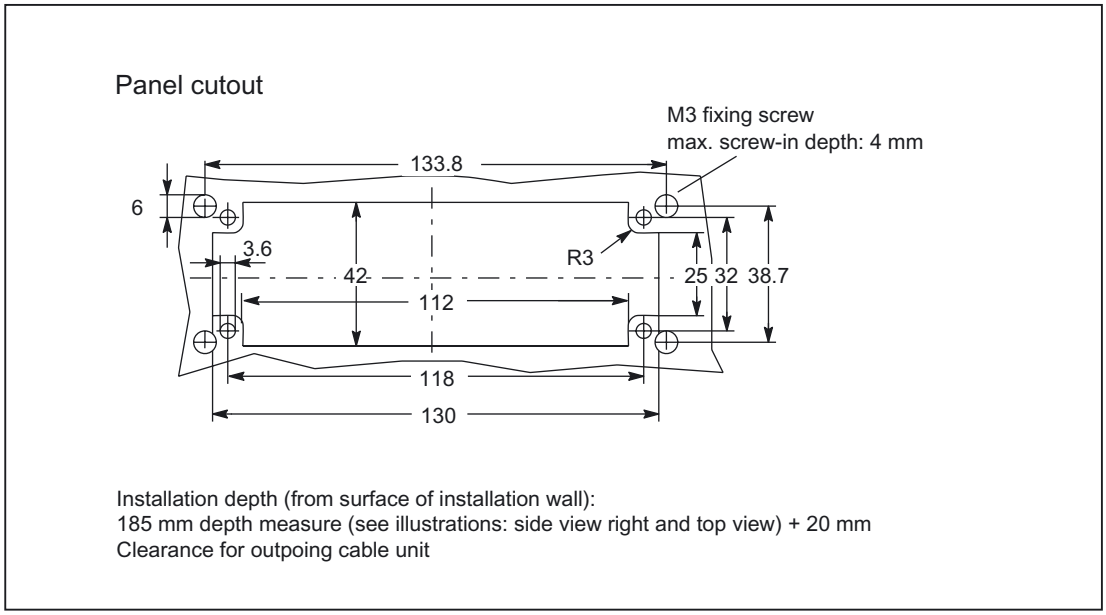

Figure 44-5 Dimension drawing for the installation

CAUTION
The disk drive can be mounted in any position, except upside down.

Dimension drawing of blanking plate

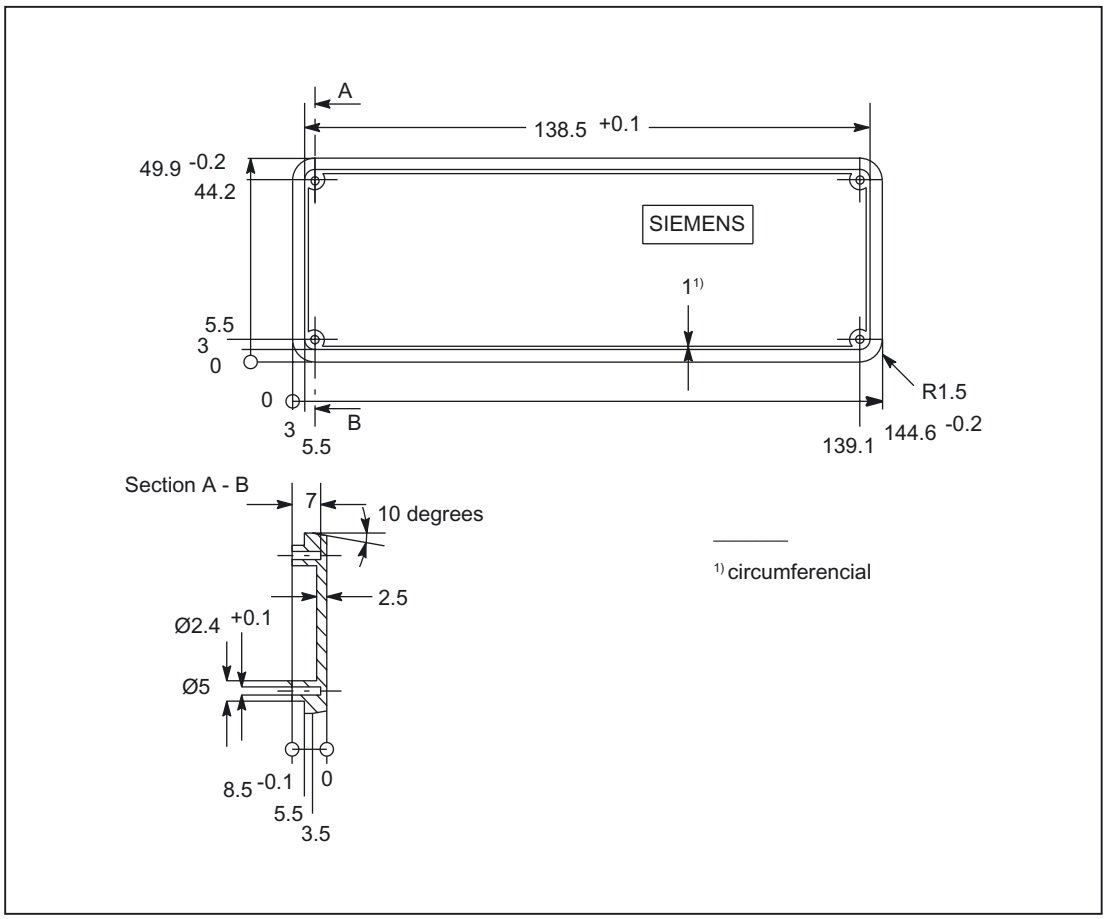

Figure 44-6 Dimension drawing of blanking plate

44.4 Technical specifications

Security		
Safety class	III; PELV acc. to EN 50178	
Degree of protection per EN 60529	Front panel IP54	Rear side IP 00
Approvals	CE	
Electrical specifications		
Input voltage	DC 24 V	
Power consumption	max. 5 W	
Mechanical data		
Dimensions	Width: 145 mm Height: 50 mm	Depth: 202 mm Mounting depth: 185 mm
Weight	Approx. 0.8 kg	
Distance from PCU	Max. 0.5 m	
Mechanical ambient conditions		
Vibratory load	10 -100 Hz: 1.5 g 101 -200 Hz: 1.0 g 201 -600 Hz: 0.5 g	
Climatic ambient conditions		
Cooling	By natural convection	
Condensation, spraying water and icing	Not permitted	
Supply air	Without caustic gases, dusts and oils	
	Operation	**Storage/shipping** (in transport packaging)
Applicable standards	EN 60721-3-3	EN 60721-3-1 / -3-2
Climate class	3K5	1K3 / 2K4
Temperature limits	0 ... 55 ºC (at rear)	-20 ... 60ºC
Temperature change	Max. 10 K/h	Max. 18 K/h
Limits for relative humidity	5 ... 80%	5 ... 95%
Permissible change in the relative air humidity	max. 0.1% /min	

Floppy disk drive 3.5" (USB)

45

45.1 Description

The 3.5" disk drive (USB) is suitable for archiving user data and can be installed in front panels. It is connected via a USB1.1 interface.

Validity

This description applies to the following components:

Component	Order No.:
3.5" floppy disk drive with USB interface	6FC5235–0AA05–1AA1
	6FC5235–0AA05–1AA2

Features

- The floppy disk drive is used to load and save data from/to 3.5” disk with a "Normal density" capacity (720 KB) and "High density" capacity (1.2 / 1.44 MB)
- Can be mounted in front panels
- System can be booted from floppy drive
- Connection: USB 1.1
- Can be supplied in two variants to suit different operating conditions.

The 3.5” floppy disk drive is supplied with a connected 1 m long USB cable.

View

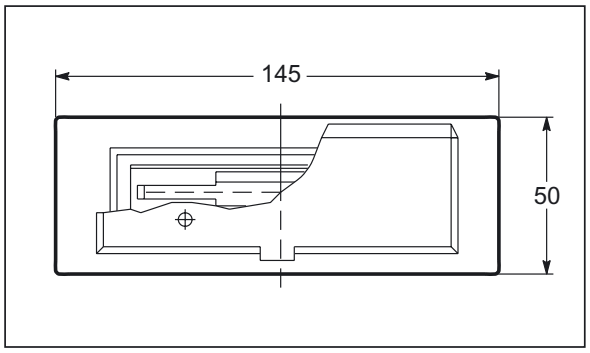

Figure 45-1 Front view

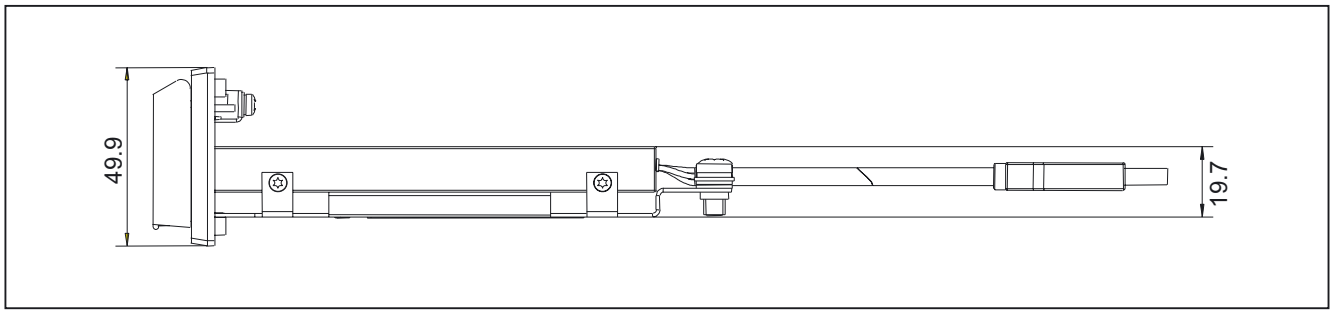

Figure 45-2 Side view from right

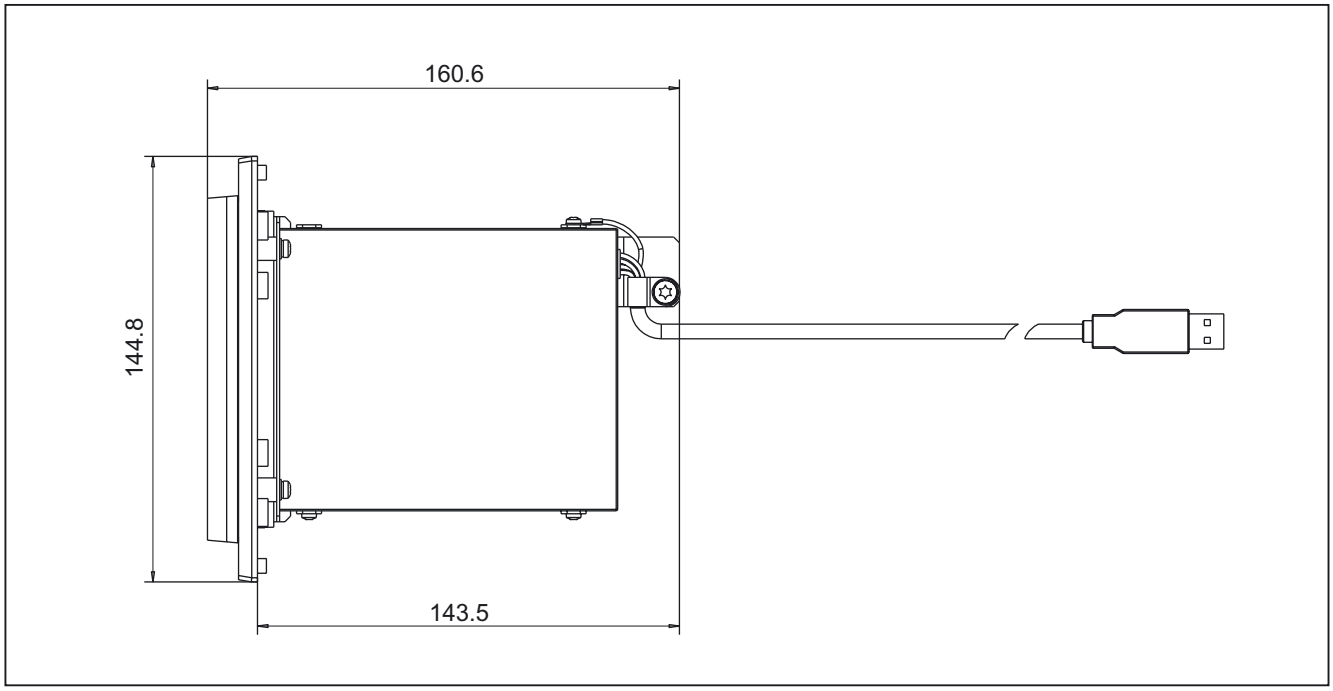

Figure 45-3 Top view

45.2 Interfaces

45.2.1 Hardware

Connector assignment

Table 45-1 Connector assignment - USB standard 1.1

Contact No.	Signal name	Description
1	V_{CC}	Power supply
2	- Data	Data-
3	+ Data	Data +
4	Ground	Ground

Cable

The cable is fitted with a standard USB-A connector at the device end.

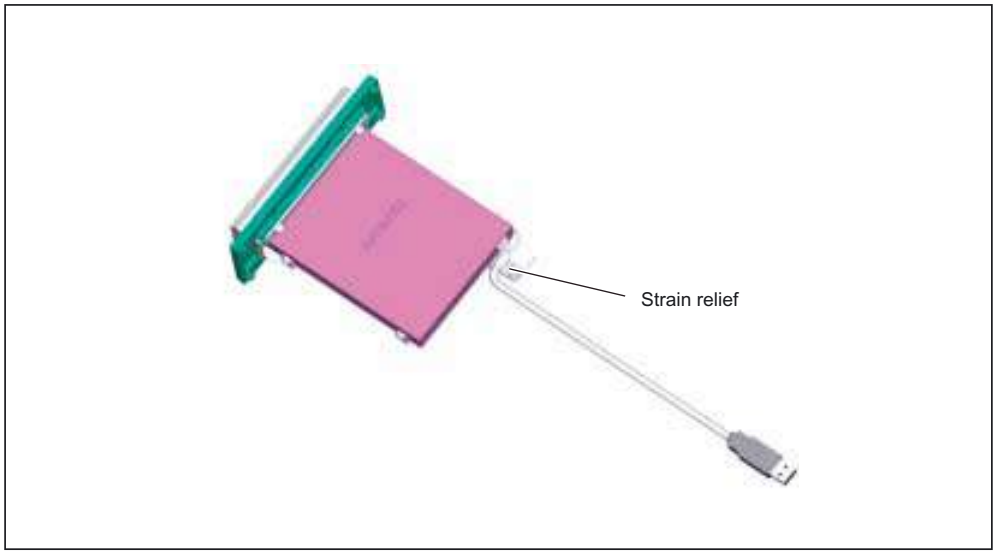

Figure 45-4 Strain relief of cable

45.2.2 Software

The drive complies with USB standard 1.1.

Note

The driver software is not included in the delivery kit.

45.3 Mounting

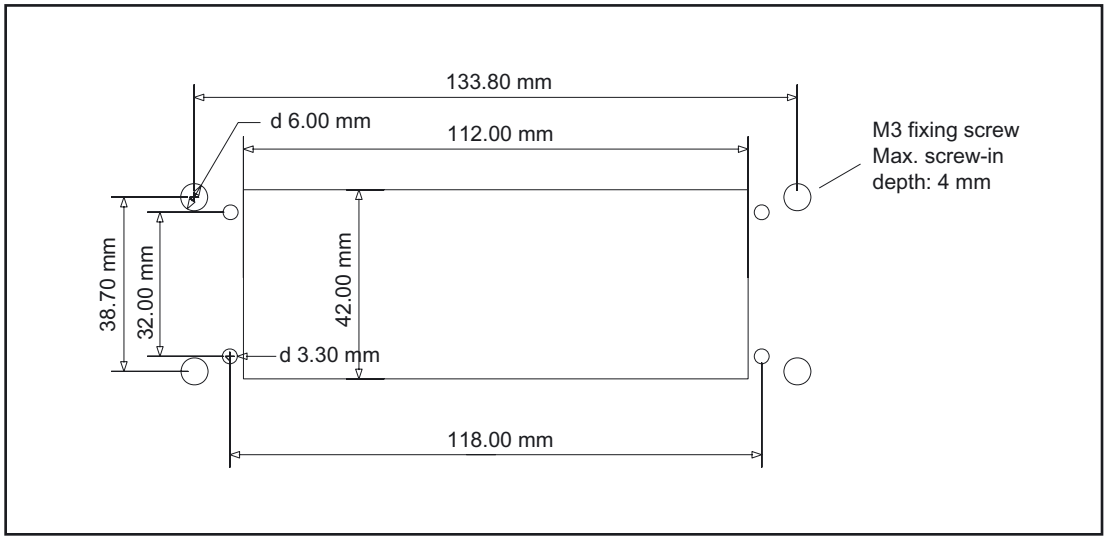

Figure 45-5 Panel cutout

CAUTION
The mounting position of the floppy disk drive is shown in the following two figures. The drive must not be installed upside down.

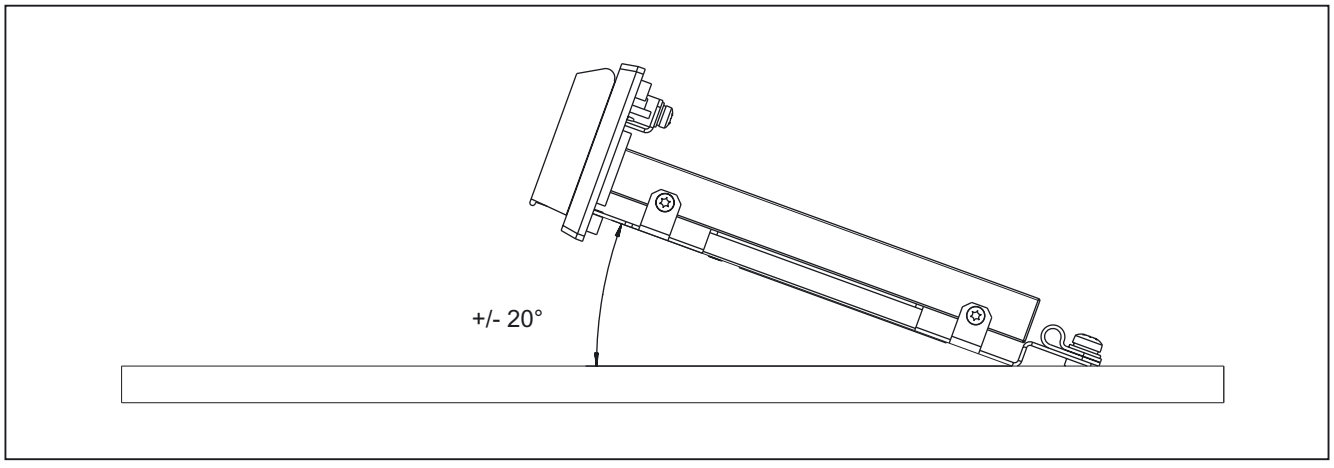

Figure 45-6 Side view of mounting position

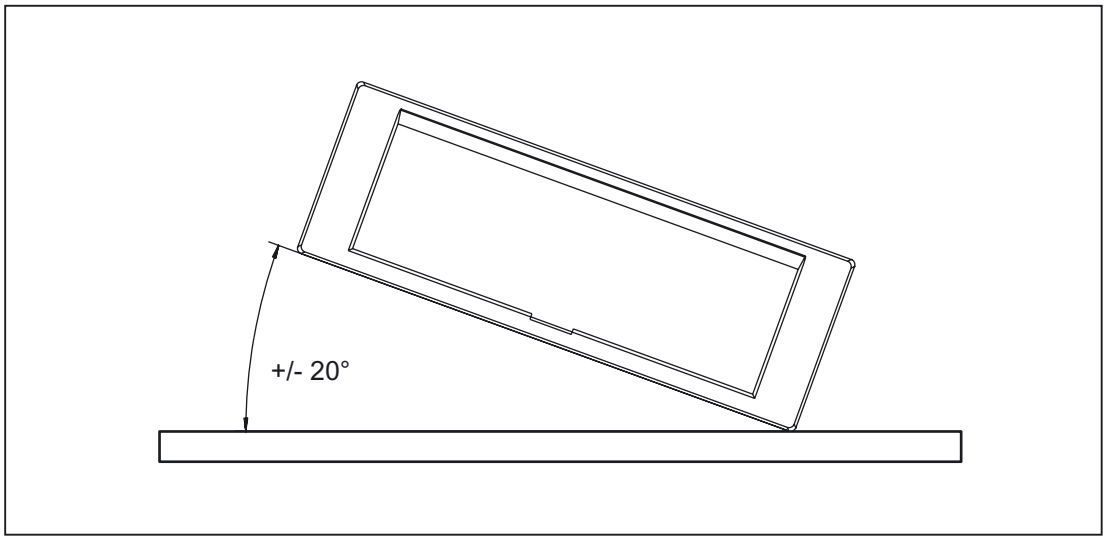

Figure 45-7 Front view of mounting position

Note

The front cover must be closed to prevent ingress of dirt or damage.

45.4 Notes about operation

45.4.1 Overview

Longer USB cable

It is not permissible to extend the USB cable.

Required power

The drives are high-power devices (power consumption up to 500 mA); they therefore must not be operated on low-power USB outputs (up to 100 mA).

Leaving floppy disks in drive

Floppy disks should not be left in the drive for longer than necessary, since

1. they and the drive are not protected against dust in this situation,
2. the risk of data errors increases at temperatures higher than 45 °C.

45.4.2 Disk drive (6FC5235-0AA05-1AA1)

SINUMERIK PCU 50 and PCU 70

A PCU operating with PCU basic software WinNT4.0 = V07.03.03 is required to operate the USB floppy disk drive (Order No. ...-1AA1) on the SINUMERIK PCU 50 (566 MHz / 1.2 GHz) with Windows NT 4.0.
You can obtain this version by installing the Service Pack V07.03.03 (available from your Siemens service center).

The service pack V07.03.03 adds the driver for the USB floppy disk drive to the software version V07.03.02 which is preinstalled on shipped PCU 50.

The USB disk drive can be operated on SINUMERIK PCU 50s and PCU 70s with Windows XP without a separate driver.

SIMATIC panels and panel PCs

To use the USB floppy disk drive on the following SIMATIC panels

- OP/TP 270
- MP 270B
- MP 370

a separate driver is required. This driver can be downloaded from the Siemens website (Service & Support page for SIMATIC panels) (USB Storage Driver V1.0). The driver also includes documentation with installation instructions.

No separate driver is required to operate the USB floppy disk drive on SIMATIC panel PCs (except for Windows NT 4.0 operating system).

45.4.3 Disk drive (6FC5235-0AA05-1AA2)

SINUMERIK PCU 50 and PCU 70

A PCU 50/70 (566 MHz/1.2 GHz) with BIOS V02.03.07 and PCU basic software for WinNT4.0 V07.03.03 or PCU basic software for WinXP V07.03.02.01 are needed to operate the USB floppy disk drive (Order No. ...-1AA2).
The PCU basic software for WinNT V07.03.03 can be obtained by installing the V07.03.03 Service Pack (available from your local Siemens service center). The service pack V07.03.03 adds the driver for the USB floppy disk drive to the software version V07.03.02 which is preinstalled on shipped PCU 50.

The USB disk drive can be operated on SINUMERIK PCU 50s and PCU 70s with Windows XP without a separate driver.

Only one floppy disk drive may be connected to each PCU 50 / 70; the drive must be connected before the PCU is switched on.

The USB floppy disk drive can be activated as drive B without changing the BIOS settings: In operation with HMI Advanced, the entry "FloppyDisk=" in file MMC.INI must therefore be adapted.

Reading the emergency boot disks V02.03.x or V02.04.x from the USB disk drive takes a very long time. We therefore recommend the use of the emergency boot disks V02.05.00 (available from your local Siemens service center).

SIMATIC panel PCs

The USB floppy disk drive is approved for operating systems MS Windows 2000 and MS Windows XP. The appropriate drivers for the disk drive are supplied with the operating system software.

SIMATIC panels

To use the USB floppy disk drive on the following SIMATIC panels

- OP/TP 270
- MP 270B
- MP 370

a separate driver is required. This driver can be downloaded from the Siemens website (Service & Support page for SIMATIC panels) (USB Storage Driver V1.0). The driver also includes documentation with installation instructions.

45.5 Technical specifications

45.5.1 Disk drive (6FC5235-0AA05-1AA1)

Security		
Safety class	III; PELV acc. to EN 50178	
Degree of protection per EN 60529	Front panel IP54	Rear side IP 00
Approvals	CE	
Electrical specifications		
Input voltage	DC 5.25 V	
Power consumption	max. 2.5 W	
Mechanical data		
Dimensions	Width: 145 mm Height: 50 mm	Depth: 161 mm Mounting depth: 144 mm
Weight	Approx. 0.3 kg	
Orientation	any (except upside down)	
Distance from PCU	Max. 5 m	
Mechanical ambient conditions	**Operation**	**Storage/transport**
Vibratory load	10 -200 Hz: 0.5 g	10 -200 Hz: 1 g
Shock stressing	5 g; 30 ms	10 g; 11 ms
Applicable standards	EN 60721-3-3; 3M4	EN 60721-3-2; 2M2
Climatic ambient conditions		
Cooling	By natural convection	
Condensation, spraying water and icing	Not permitted	
Supply air	Without caustic gases, dusts and oils	
	Operation	**Storage/shipping** (in transport packaging)
Applicable standards	EN 60721-3-3	EN 60721-3-1 / -3-2
Climate class	3K5	1K3 / 2K4
Temperature limits	4 ... 50 ºC	-20 ... 60ºC
Temperature change	Max. 10 K/h	Max. 18 K/h
Limits for relative humidity	20 ... 80%	5 ... 90%
Permissible change in the relative air humidity	max. 0.1% /min	

45.5.2 Disk drive (6FC5235-0AA05-1AA2)

Security			
Safety class	III; PELV acc. to EN 50178		
Degree of protection per EN 60529	Front panel IP54	Rear side IP 00	
Approvals	CE		
Electrical specifications			
Input voltage	DC 5.25 V		
Power consumption	max. 2.5 W		
Mechanical data			
Dimensions	Width: 145 mm Height: 50 mm	Depth: 161 mm Mounting depth: 144 mm	
Weight	Approx. 0.32 kg		
Orientation	any (except upside down)		
Distance from PCU	Max. 5 m		
Mechanical ambient conditions	**Operation**	**Storage/transport**	
Vibratory load	10 -200 Hz: 0.5 g	10 -200 Hz: 1 g	
Shock stressing	5 g; 30 ms	10 g; 11 ms	
Applicable standards	EN 60721-3-3; 3M4	EN 60721-3-2; 2M2	
Climatic ambient conditions			
Cooling	By natural convection		
Condensation, spraying water and icing	Not permitted		
Supply air	Without caustic gases, dusts and oils		
	Operation	**Bearings**	**Transport**
Applicable standards	EN 60721-3-3	EN 60721-3-1 / -3-2	
Climate class	3K5	1K3 / 2K4	
Temperature limits	4 ... 50 ºC	-22 ... 60ºC	-40 ... 65 ºC
Temperature change	Max. 20 K/h	Max. 30 K/h	
Limits for relative humidity	20 ... 80% at 4 ... 52°C	5 ... 90% at -22 ... 60 °C	5 ... 95 % at -40 ... 65 °C
Permissible change in the relative air humidity	max. 0.1% /min		

45.6 Replacement parts

The following spare parts are available for the 3.5" floppy disk USB:

Description	Description	Number	Order No.:
Floppy disk drive cover	with shutter, cover and bearing bracket	1	6FC5247-0AA20-0AA0

Card reader with USB interface

46

46.1 Description

The SINUMERIK card reader is intended for archiving and exchanging user data.

The card reader is connected via the USB interface.
It can be installed in a front panel. This makes data exchange possible without opening the control cabinet.

The card reader can be booted.

All cards can be inserted and removed during operation.

Validity

This description applies to card reader
Order No.: 6FC5335-0AA00-0AA0.

Features

- Suitable for CF, SD, and MMC cards
- Installation in front panels
- Bootability
- Connection: USB 2.0

The card reader is supplied with a connected 1 m long USB cable.

Possible connections

The card reader is suitable for connection to:

- SINUMERIK PCU 50 / 70 with Windows XP
- SINUMERIK PCU 50.3
- SINUMERIK TCU

46.2 Operator controls and indicators

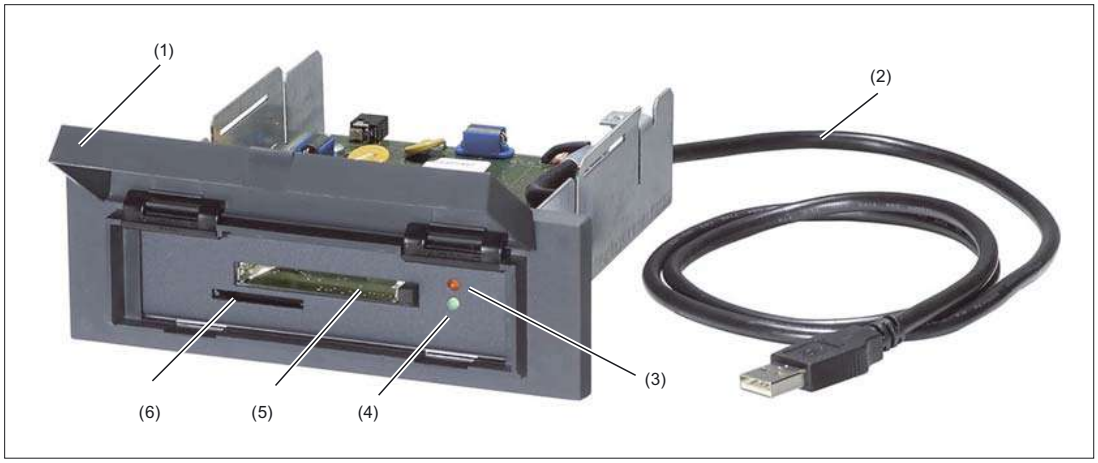

Figure 46-1 Front view of the USB card reader

(1) Slot cover
(2) USB cable
(3) LED for displaying read and write processes (red)
(4) LED for displaying operational readiness (green)
(5) Slot for CF cards
(6) Slot for SD / MMC cards

Function of the LEDs

Two LEDs (see Fig.) with different functions are located next to the slot for CF cards.

LED	Display
Green	lit permanently if the card reader is ready for operation
Red	lit if reading or writing is in progress

Card slots

The two card slots of the reader are located under the cover.

Cards can be put in both slots at the same time as they operate simultaneously. In this way, it is possible to

- copy files from one card to the other,
- read or write to the media from various applications at the same time.

Note

Only use card types and sizes offered by Siemens.
You will find the order numbers in Catalog NC 61.

We cannot guarantee that every card available on the market can be used.

46.3 Interfaces

The card reader has a USB interface (USB 2.0).

The card reader can be connected via this interface to a USB interface of the PCU / TCU whose maximum current carrying capacity is 500 mA.

Transmission speed

If the card reader is connected to a USB 2.0 interface, the bus speed is automatically 480 Mbit/s (high speed).

The card reader switches to 12 Mbits/s (full speed) on a USB 1.1 interface.

46.4 Installation

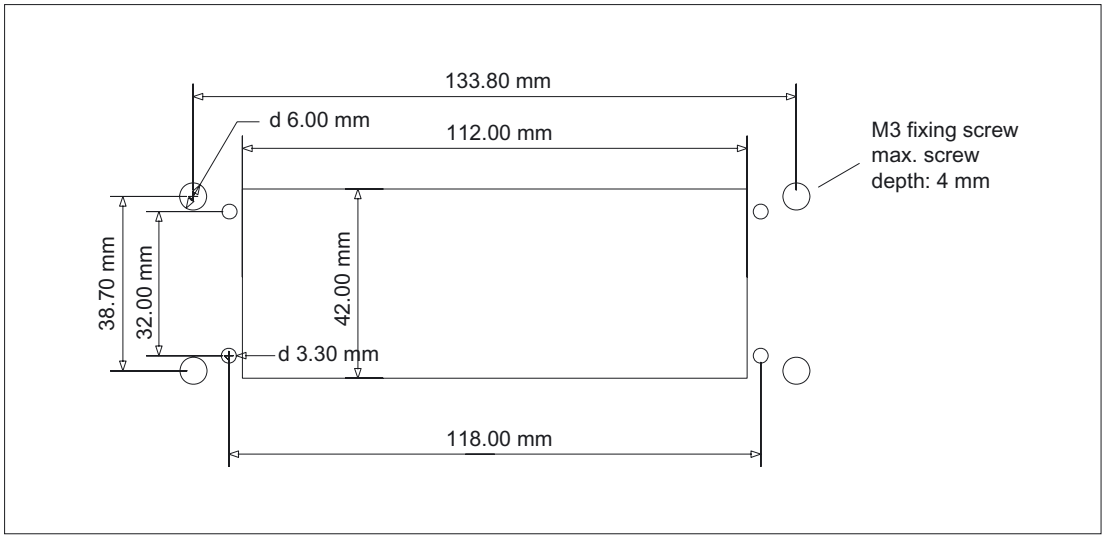

Figure 46-2 Panel cutout

Note

The slot cover of the card reader must be closed to prevent dirt entering or damage during installation.

46.5 Memory cards

The card reader is suitable for

- Compactflash cards (CF)
- SecureDigital cards (SD)
- Multimedia cards (MMC)
- MicroMemory cards (Simatic MMC)

Note

The read and write speed depends on the card used!

Booting

With the exception of the Simatic MMC, all other cards are bootable.

Card type	Bootable
CF cards	X
SD cards	X
MMC cards	X
Simatic MMC cards	-

Note

The card reader works like a USB drive.
Please note therefore that restrictions in the BIOS or operating system may not always allow booting from such a drive.

46.6 Technical data

Safety			
Safety class	III; PELV acc. to EN 50178		
Degree of protection to EN 60529	Front panel IP54	Rear side IP 00	
Certificates and approvals	CE		
Electrical data			
Input voltage	4.75 V to 5.25 V		
Mechanical data			
Dimensions	Width: 145 mm Height: 50 mm	Depth: 143 mm Mounting depth: 125 mm	
Weight	Approx. 0.4 kg		
Card slots	2 (for every 10,000 mating cycles)		
Mechanical ambient conditions	**Operation**	**Storage/transport**	
Vibration stressing	10 - 58 Hz: 0.075 mm	10 - 200 Hz: 1 g	
Applicable standards	EN 60721-3-3; 3M4	EN 60721-3-2; 2M2	
Climatic environmental conditions			
Cooling	By natural convection		
Condensation, spraying water and icing	Not permitted		
Air inlet	Without caustic gases, dusts and oils		
	Operation	**Storage**	**Transport**
Applicable standards	EN 60721-3-3	EN 60721-3-1 / -3-2	
Climate class	3K5	1K3 / 2K4	
Temperature limits	0 ... 60ºC	-40 ... 70 ºC	-40 ... 70 ºC
Temperature change	Max. 20 K/h	Max. 30 K/h	
Limits for relative humidity	Max. 90%	Max. 90%	Max. 90%
Permissible change in the relative air humidity	max. 0.1% /min		

46.7 Accessories

The accesories listed in the overview are available for the card reader.

Component	Description	Amount	Order No.:
Cover	for diskette drive and card reader	1	6FC5247-0AA20-0AA0

Cooling

47

47.1 Methods

For the technical data for the control components (e.g. degree of protection, power loss, etc.), please refer to the section: "Technical data" of the relevant component

---

Note

To calculate the heat dissipation, the total power loss P_{Vtotal} of all heat-generating components in a casing must be taken into account.

Total power loss $P_{Vtotal} = P_{V1} + P_{V2} + P_{V3} + ... [\omega]$

Convection surface area A [m^2]:
The surface areas of the front and bottom faces are not included in the convection surface area calculation.

Means of heat dissipation

Heat dissipation can take place as follows:

- Heat dissipation by natural convection
- Heat dissipation by natural convection and internal air turbulence
- Heat dissipation by open-circuit cooling
- Heat dissipation by open-circuit ventilation

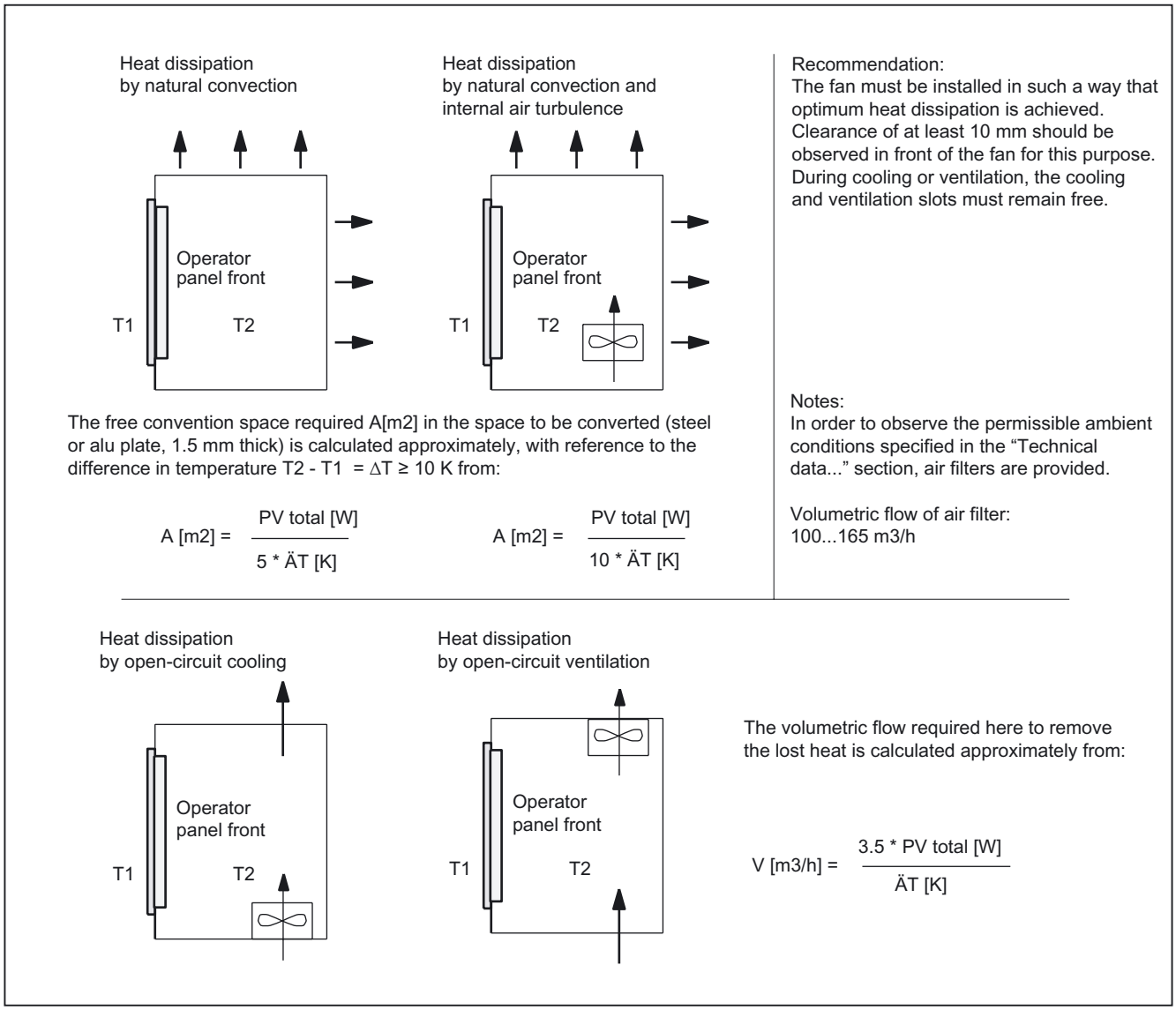

Figure 47-1 Means of heat dissipation

Note

If the convection service area A [m^2] is insufficient for "Heat dissipation by natural convection", then
"Heat dissipation by natural convection and internal air turbulence" or
"Heat dissipation by open-circuit cooling or ventilation" should be used.

For hot spots and heat concentration in narrow casings,
"Heat dissipation by natural convection and internal air turbulence" is recommended.

The total power loss PVtotal can also be calculated as follows for applications of critical temperatures:
- current measurement at 24 V power supply
- power loss when P_{Vtotal} [W] = U (24 V) * | (measured in amps)

47.2 Sample calculation of thermal power loss

Calculating the PCU thermal power loss of

The power loss (thermal) dissipated by the components in an operator unit is to be dissipated using open-circuit ventilation. The volumetric flow V required for this should be calculated at a difference in temperature of $T_2 - T_1 = \Delta T \geq 10K$.

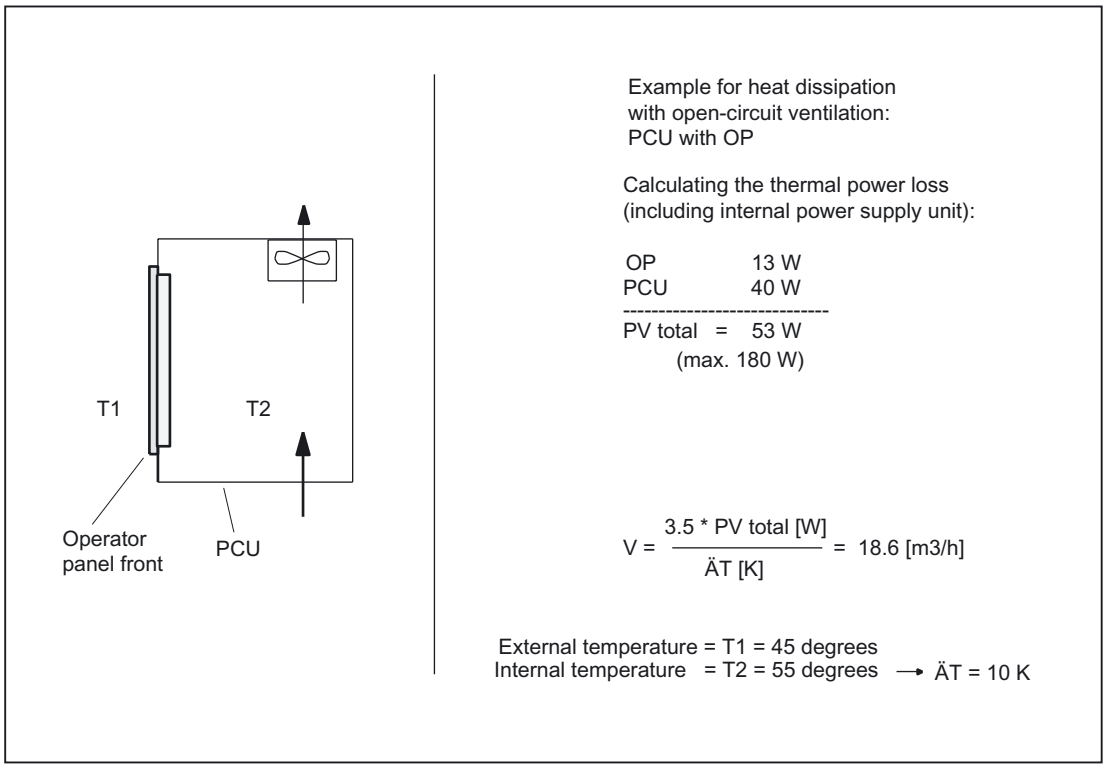

Figure 47-2 Calculating heat dissipation for PCU with OP

ESD guidelines

A

ESD notices

Electrostatically **S**ensitive **D**evices

CAUTION
Handling of modules containing devices sensitive to electrostatic discharge: When handling electrostatically sensitive devices, make sure that operator, workplace and packing material are properly grounded. Generally, electrostatic modules must not be touched unless work has to be carried out on them. When handling PC boards make absolutely sure that you do not touch component pins or printed conductors. Touch components only if - you are permanently grounded by means of an antistatic chain, - you are wearing ESD boots or ESD boots with grounding strips in conjunction with ESD flooring Modules may be placed only on electrically conductive surfaces (table with ESD top, conductive ESD foam plastic, ESD packing bags, ESD transport containers). Never place modules in the vicinity of display units, monitors, or television sets (minimum distance > 10 cm). Do not bring ESD-sensitive modules into contact with chargeable or highly-insulating materials, such as plastic, insulating table tops or clothing made of synthetic materials. Measurements on modules are allowed only if - the measuring instrument is properly grounded (e.g. equipment grounding conductor), or - before measuring with a potential-free measuring instrument, the probe is briefly discharged (e.g. touch the unpainted metal parts of the control housing).

List of abbreviations

B

A & D	Automation & Drives
AC	Alternating Current
ALS	Authorization Lock Switch
AS	Motor drive side
ASIC	Application Specific IC
AT	Advanced Technology
BA	Mode selector switch
BIOS	Basic Input Output System
CCFL	Cold Cathode Fluorescent Lamp
CDROM	Compact Disk ROM
COM	Communications module
CPU	Central Processing Unit
CRT	Cathode Ray Tube
DC	Direct Current
DIE	Handheld terminal
DIE	Integrated Drive Electronics
DIP	Dual In-Line Package
DKM	Direct Key Module
DRAM	Dynamic RAM
EFP	Single I/O module
EKS	Electronic Key System (Euchner's identification system)
EMC	Electromagnetic Compatibility
EN	European standard
FB	Function Block
FBG	Function Block Group
FM	Function Module
GD	Global data communication
GND	Ground
GSD	Collective unit file (file describes a PROFIBUS slave following the PROFIBUS standard)
HF	Function keys LED
HGA	Connection for handheld units
HHU	HandHeld Unit
HID	Human Interface Device
HMI	Human Machine Interface: Operating functions of SINUMERIK for operation, programming, and simulation. MMC means the same as HMI.
HS	Customer keys LED
HU	Extension keys LED
HW	Hardware

I/O	Input/Output
I/O	Input/Output
IC	Integrated Circuit
IE	Industrial Ethernet
IP	ID letter for degree of protection
ISA	Industry Standard Architecture (AT standard)
K–bus	Communication bus
KT	Customer keys
LCD	Liquid Crystal Display
LE	Long Element
LED	Light Emitter Diode
LPT	Line Printer
MCP	Machine Control Panel
MCP	Machine Control Panel
MCU	Motion Control Unit, digital single-axis/positioning control
MFII	Multifunction keyboard II
MLFB	Machine-readable product designation
Modem	Modulator–demodulator
MP	Mobile Panel
MPI	Multi-Point Interface
MPP	Machine Pushbutton Panel
N.C.	Not Connected
NC	Numeric Control
NCK	Numerical Control Kernel
NCU	Numeric Control Unit
NMI	Non-maskable Interrupt
OP	Operator panel front
OP	Operator Panel Front
OPI	Operator panel front interface
P–bus	I/O bus
PC/	Personal Computer
PC/XT	PC Extended Technology
PCMCIA	PC Memory Card International Association
PCU	PC Unit, PC box (computer unit)
PE	Potential Earth
PELV	Protective Extra Low Voltage
PER	Peripherals
PG	Programming device
PG interface	Programming device interface
PLC	Programmable Logic Control (: component of NC)
PNO	PROFIBUS User Organization
PP	Push–Button–Panel
PROFIBUS	Process Field Bus
PS/2	Personal System/2
RAM	Random Access Memory

ROM	Read Only Memory
SCSI	Small Computer System Interface (parallel interface for up to 7 simultaneous devices)
SIM	Single Inline Module
SPC	Serial I/O controller, Siemens PROFIBUS Controller
SR	Mushroom-shaped button for rapid withdrawal
SS	Interface
STN	Super Twisted Nematic (flat screen technology)
SVGA	Super VGA (screen resolution 800 x 600, 16 million colors)
SW	Software
TCU	Thin Client Unit
TFT	Thin Film Transistor (flat screen technology)
UL	Underwriters Laboratories
UOP	Unit Operator Panel
USB	Universal Serial Bus
V.24	Interface standard in accordance with CCITT V.24
VGA	Video Graphics Adapter (screen resolution 640 x 480, 16 colors)
VLE	Video link receiver
WD	Watch dog
WS	Selector switch
XGA	Extended VGA (screen resolution 1024 x 768)

Appendix

C

C.1 Key symbols OP 08T

Table C-1 Key symbols OP 08T

	5000	M MACHINE	5001		5002	MENU SELECT	5003	MANUAL	5068
EASYSTEP	5069	EASYSTEP	5070	CONTOUR	5071	CUT	5072	CYCLE	5073
CIRCLE	5074	CONICAL	5075	STRAIGHT	5076				
TAB	6000	CTRL	6001	ALT	6002	ALARM CANCEL	6003	HELP	6004
ALARM	6005	1…n GROUP CHANNEL	6006	NEXT WINDOW	6007	PAGE UP	6008	SELECT	6009
DEL	6010	SHIFT	6011	PROGRAM	6012	TOOL OFFSET	6013	PROG. MANAGER	6014
END	6015	PAGE DOWN	6016	BACK SPACE	6017	INSERT	6018	INPUT	6019
PROGRAM MANAGER	6069	OFFSET	6070	CUSTOM	6071		6072		6073
	6074		6075						
Q	6020	W	6021	E	6022	R	6023	T	6024
Y	6025	U	6026	I	6027	O	6028	P	6029
A	6030	S	6031	D	6032	F	6033	G	6034
H	6035	J	6036	K	6037	L	6038	Z	6040
X	6041	C	6042	V	6043	B	6044	N	6045
M	6046	" '	6039	{ [	6048	}]	6049	| \	6050
< ,	6051	: ;	6052	+/− _	6053	& 7	6054	* 8	6055
(9	6056	$ 4	6057	% 5	6058	^ 6	6059	! 1	6060
@ 2	6061	# 3	6062	¯ _	6063	) 0	6064	> .	6065
? /	6066	=	6067	` *	7133	~ +	7134		

JOG	7001	REPOS	7002	REF.POINT	7003	[VAR]	7004	SPINDLE DEC.	7005
100%	7006	SPINDLE INC.	7007	MDA	7008	TEACH IN	7009	1	7010
SPINDLE RIGHT	7012	SPINDLE STOP	7013	SPINDLE LEFT	7014	AUTO	7015	SINGLE BLOCK	7017
RESET	7018	CYCLE STOP	7020	CYCLE START	7021	WCS MCS	7024	FEED STOP	7025
FEED START	7026	RAPID	7027	4 4TH AXIS	7029	5 5TH AXIS	7030	6 6TH AXIS	7031
	7040		7041		7042		7043		7044
	7045		7046		7047		7048		7049
	7051		7052		7053		7054	P1	7055
P2	7056	1	7057	P0	7058	P3	7059	P4	7060
0	7061	%	7062	P5	7063	P6	7064	1	7065
100%	7066	P7	7067	P8	7068	0	7069	%	7070
P9	7071	P10	7072		7073		7074		7075
C	7076	C	7077	B	7078	B	7086		7079
	7080		7081		7082		7083		7084
	7085		7087		7088		7089	1..n	7090
1..n	7091		7092		7093	1	7094	2	7095
	7096		7099	10	7100		7101		7102
100	7103		7104	100%	7105		7106	1000	7107
	7108		7109		7110	–	7111	+	7112
	7113		7114		7115		7116	7 7TH AXIS	7120
8 TH AXIS	7121	9 9TH AXIS	7122	10000	7123	SPINDLE START	7124	+C	7125
+X	7126	+Y	7127	+Z	7128	–X	7129	–Y	7130
–Z	7131	–C	7132		7135	ARTIS	7136		7137
	7138	M01	7139		7140	1...7	7141	%	7142
	7143	SKP	7144	SKP7	7145	3	7146	4	7147

	7148		7149		7150		7151		7152
	7153	AXIS 5...n	7154		7155		7156		7157
	7158		7159		7160		7161		7162
	7163		7164						

C.2 Feedback on the documentation

This document will be continuously improved with regard to its quality and ease of use. Please help us with this task by sending your comments and suggestions for improvement via e-mail or fax to:

E-mail: mailto:docu.motioncontrol@siemens.com

Fax: +49 (0) 9131/98 - 63315
Please use the fax form on the back of this page.

To:	From
SIEMENS AG A&D MC MS1 P.O. Box 3180	Name:
	Address of your Company/Dept.
91050 ERLANGEN, GERMANY	Street:
	Zip code: City:
	Phone: /
Fax: +49 (0) 9131/98 - 63315 (documentation)	Fax: /

Suggestions and/or corrections

C.3 Documentation tree

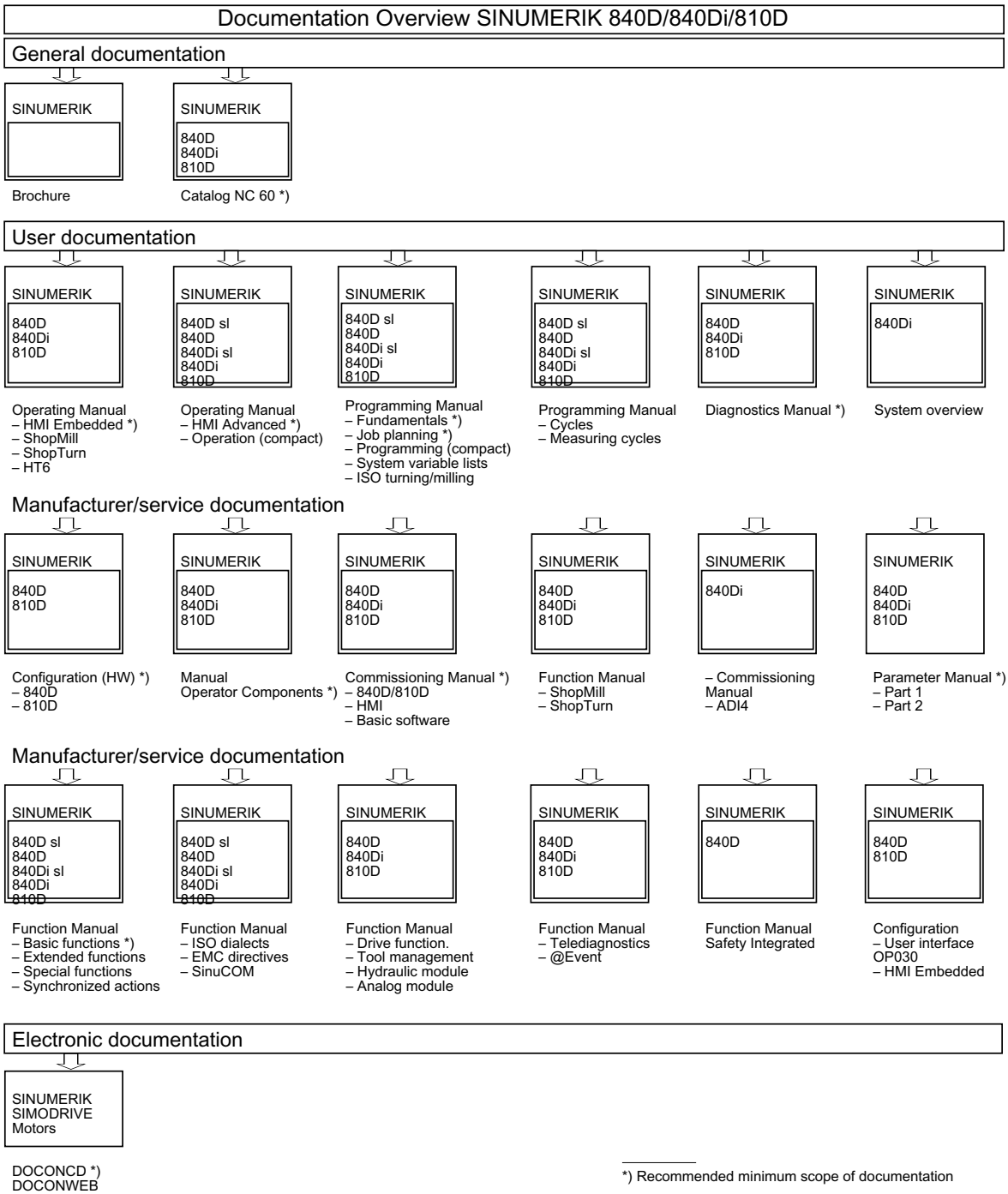

Index

A

AC power supply
Connection conditions, 27
Agreement button
HT 6, 520, 521
HT 8, 567
PP 012, 858, 859, 862
Ambient conditions
Connection conditions, 25, 46
ASCII code
Handheld unit B-MPI, 620
Axis override switch
Operator panel 15 with VLE, 281
Axis selection switch
Mini handheld unit, 593

B

Backlight inverter
HT 6, 549
OP 010S, 93
OP 015, 163, 164
OP 015A, 178
OP 015AT, 224
TP 012, 150
TP 015A, 202
TP 015AT, 246
Backup battery
Connection conditions, 45
PCU 50, 389, 394
PCU 50.3, 449
PCU 70, 473
Basic PLC program
MCP 310, 698, 705
MCP 483, 663, 670
Basic software
PCU 50, 383
BIOS parameters
PCU 50, 379
BIOS setup
PCU 50, 382
PCU 50.3, 436, 439
Block diagram
PP 012, 828
Boot list
PCU 50.3, 436
Boot manager
PCU 50, 379
PCU 70, 471
Bus address
MCP 483C, 643

C

Card reader
Dimensions, 973
Cardbus cards
PCU 50, 386
Central mounting
Distributed configuration with VLE, 481, 500
PCU 50, 374
PCU 50.3, 420
PCU 70, 468
CF card
Dimensions, 950
Changeover time
HT 6, 533
C-MOS level
MPI interface, 893, 895
CNC keyboard
15 operator panel w/o VLE, 305
15 operator panel w/o VLE, 306
15 operator panel w/o VLE, 316
KB 310C, 927
KB 483C, 917
Operator panel 15 with VLE, 257, 258
Coding switches
Direct control key module, 335, 341, 345, 347
Operator panel 15 with VLE, 278
COM board
MCP 310, 690, 691, 698
MCP 483, 652, 654, 663
MPP 483, 789, 803
COM connection
PP 012, 824, 831

Compact Flash card
PCU 50.3, 454, 460
Configuration, distributed
15 operator panel w/o VLE, 306
Operator panel 15 with VLE, 257, 258
PCU 50, 374
PCU 70, 463, 468, 470
Configuration, integrated
Operator panel 15 with VLE, 257
Configurations
Distributed configuration with VLE, 480
Thin Client Unit, 508
Connection conditions
AC power supply, 27
Ambient conditions, 25, 46
Backup battery, 45
DC power supply, 27
DIP switch, 47
EMC measures, 27, 32
Equipotential bonding cable, 32
Function-impairing dust, 46
Function-impairing gases, 46
Grounding concept, 30
Hard disk drives, 45
HHU, 47
HT6, 47
Membrane connectors, 43
MPI bus, 46
MPI connector, 47
network installation, 47
Protective separation, 27, 28
RI suppression, 26
Shielded signal cables, 31
User Interface, 27, 28
Connection for handheld units
PP 012, 824, 826, 831, 858
Connection kit
Mini handheld unit, 594, 601
Contact maker
MPP 483, 822, 892

D

DC power supply
Connection conditions, 27
Device fan
Distributed configuration with VLE, 492
PCU 20, 372
PCU 50, 389, 393
PCU 70, 467, 473
DHCP server
Thin Client Unit, 508
DHCP Server
OP 012T, 129
DIP FIX switches
15 operator panel w/o VLE, 311
Operator panel 15 with VLE, 263, 280
DIP switch
Connection conditions, 47
Distributed configuration with VLE, 482, 487, 492, 497, 499
Handheld unit B-MPI, 613
MCP 310, 662, 697, 703
MCP 483, 653, 662, 697
MCP 483C, 637, 641
MPI interface, 899
OP 032S, 729
PP 012, 824, 827, 872
DIP switch
Operator panel 15 with VLE, 286
Direct control key
Direct control key module, 338
PP 012, 824, 827, 840, 866
Direct control key module
Coding switches, 335, 341, 345, 347
Direct control key, 338
DKM cable, 339, 345, 348
LEDs, 336
Profibus cable, 338
Profibus connector, 341
PROFIBUS DP, 335
Direct control keys
MPP 483, 799
Display
HT 8, 565
Display coding switch
Distributed configuration with VLE, 484, 486, 492, 498
Display support
OP 010, 79
OP 010S, 94
OP 012, 126
OP 015, 164
OP 015A, 178
OP 015AT, 224
TP 012, 150, 152
TP 015AT, 246
Display support
OP 015, 163
Distributed configuration with VLE
Central mounting, 481, 500
Configurations, 480
Device fan, 492
DIP switch, 482, 487, 492, 497, 499

Display coding switch, 484, 486, 492, 498
Flat mounting, 480, 492
Mounting bracket, 477, 484, 492, 499, 502
Mounting positions, 499
Operator panel interlock, 488
SVGA resolution, 486
Temperature monitor, 488
TFT operator panel front, 482
Upright mounting, 480, 499
VGA resolution, 486
Videolink receiver, 477, 479, 481, 482
Videolink cable, 477, 479, 482, 485
Videolink transmitter, 477, 479, 481, 482, 492
XGA resolution, 486
Distribution list
PP 012, 824, 825, 826
Distributor
Handheld unit B-MPI, 609, 610
HT 6, 529, 530, 537, 538, 542, 553
Distributor box
Handheld unit B-MPI, 603, 605, 608, 624, 628
DKM cable
Direct control key module, 339, 345, 348
DP slave MCP
MCP 310, 698, 701, 705
MCP 483, 663, 666, 670
DP slave MPP
MPP 483, 806
Driver
Floppy disk drive 3.5" (USB), 963, 964

E

EKS identification system
MPP 483, 739
EMC measures
Connection conditions, 27, 32
Handheld unit B-MPI, 627
HT 6, 537
Emergency stop button
MPP 483, 796
Emergency Stop button
Handheld unit B-MPI, 605, 608, 612, 627
HT 8, 566
Mini handheld unit, 592, 593
EMERGENCY STOP button
HT 6, 533
MCP 483C, 635
PP 012, 889
EMERGENCY STOP button
HT 6, 539
Emergency stop circuits
PP 012, 859
EMERGENCY STOP key
15 operator panel w/o VLE, 306, 312, 329
Handheld unit B-MPI, 628
HT 6, 522, 543
MCP 310, 688, 689, 713
MCP 483, 649, 651
MCP 483C, 633, 637, 646
OP 032S, 726, 736
Operator panel 15 with VLE, 259, 264, 271
PP 012, 826, 827, 831, 832, 839, 857, 865
Enabling button
Handheld unit B-MPI, 606, 608, 624, 627, 628
HT 6, 522, 539, 543
Mini handheld unit, 592, 593
Equipotential bonding cable
Connection conditions, 32
Equipotential bonding cable
Handheld unit B-MPI, 629
Equipotential bonding conductor
Handheld unit B-MPI, 624
MCP 483, 654
MCP 483C, 644
PP 012, 857
Ethernet
PCU 50, 367, 371, 386
PCU 70, 464, 466
Ethernet cable
OP 012T, 140
Thin Client Unit, 517
Ethernet switch
OP 012T, 140
Thin Client Unit, 517
Ethernet, industrial
OP 012T, 129
PCU 503, 406
Thin Client Unit, 507
Exchangeable key caps
15 operator panel w/o VLE, 308
expansion panel
PP 012, 868
Extension keys
MPP 483, 798
External floppy disk drive
PCU 20, 372
PCU 70, 467, 474

F

Fastening angle
PCU 50.3, 420
Feed override switch

OP 032S, 725
Film labels
OP 010, 78
OP 012, 126
Flat mounting
Distributed configuration with VLE, 480, 492
Operator panel 15 with VLE, 257
PCU 50, 374
PCU 50.3, 420
PCU 70, 468
Floppy disk drive 3.5" (USB)
Driver, 963, 964
Mounting position, 962
Software, 963, 964
Front USB interface
OP 010, 65, 66
OP 010C, 98
OP 010S, 81, 82
OP 012, 109, 111
OP 015, 153, 154
OP 015A, 167
TP 012, 141, 142
TP 015A, 189
Full CNC keyboard OP 032S
Dimension drawing, 936
Dimensions, 937
Key covers, 938
Key groups, 935
Power consumption, 937
PS2 technology, 936
Function-impairing dust
Connection conditions, 46
Function-impairing gases
Connection conditions, 46

G

GD communication
MPP 483, 803
GD configuring
PP 012, 827
GD identifier
PP 012, 875
GD parameters
Handheld unit B-MPI, 615
MPP 483, 802
Grounding concept
Connection conditions, 30
GSD file
MCP 310, 698
MCP 483, 663
MPP 483, 805

H

Hand wheel
15 operator panel w/o VLE, 305, 306, 312, 329
MCP 310, 688, 713
MCP 483, 650, 656, 679
Operator panel 15 with VLE, 258, 265, 281, 299
Handheld Terminal
HT 6, 519
Handheld unit B-MPI, 627
ASCII code, 620
Dimensions, 629
DIP switch, 613
Distributor, 609, 610
Distributor box, 603, 605, 608, 624, 628
EMC measures, 627
Emergency Stop button, 605, 608, 612, 627
EMERGENCY STOP key, 628
Enabling button, 606, 608, 624, 627, 628
Equipotential bonding cable, 629
Equipotential bonding conductor, 624
GD parameters, 615
Handwheel, 604, 606, 608, 624, 628, 630
Keylock switch, 604, 606, 610, 617, 630
Keys, 617
Labeling strips, 605
LEDs, 604, 606, 617
MPC bus, 625
MPI bus, 624, 625, 628
MPI cable, 605, 628
Override switch, 604, 606
Parameter assignment, 617
PLC, 606, 608, 613, 615, 617
Repeater, 608, 610
Slide-in labels, 630
Variants, 603
Handwheel
Handheld unit B-MPI, 604, 606, 608, 624, 627, 628, 630
MCP 310, 699, 705
MCP 483, 653, 664
Mini handheld unit, 592, 594, 596
Hard disk drive
PCU 50, 389
PCU 50.3, 431
PCU 503, 406
Hard disk drives
Connection conditions, 45
Hardware code
MCP 310, 662, 697
MCP 483, 662, 697
Heat dissipation
Means of heat dissipation, 975

HHU
Connection conditions, 47
HT 6, 533
Agreement button, 520, 521
Backlight inverter, 549
Changeover time, 533
Dimensions, 545
Distributor, 529, 530, 537, 538, 542, 553
EMC measures, 537
EMERGENCY STOP button, 533, 539
EMERGENCY STOP key, 522, 543
Enabling button, 522, 539, 543
Handheld Terminal, 519
HT 6 cable, 529, 538
Key switch, 533
LC display, 519
MCP simulation, 534
MPI bus, 528, 537, 539, 543
MPI cable, 528, 539, 543
Parameterization, 534
PLC, 534
PLC, 533
Power consumption, 545
Repeater, 529
Reset pushbutton, 520, 527
Reset pushbutton switch, 523, 527
Rotary override switch, 519
Slide-in labels, 553
HT 8
Agreement button, 567
Dimensions, 561
Display, 565
Emergency Stop button, 566
Membrane keyboard, 566
Panel mounting, 581
Power consumption, 561
Thin Client, 557
USB interface, 567
HT6
Connection conditions, 47
Rotary override switch, 550
Slide-in labels, 555

I

Illuminated keys
15 operator panel w/o VLE, 316
MPP 483, 821, 891
Operator panel 15 with VLE, 271, 299
Illuminated pushbuttons
15 operator panel w/o VLE, 329
Individual parts
OP 010, 76
OP 010C, 107
OP 010S, 92
OP 012, 124
OP 015, 163
OP 015A, 178
OP 015AT, 224
TP 012, 150
TP 015A, 202
TP 015AT, 246

J

Jump key
PP 012, 824, 826, 827, 831, 832, 858

K

KB 310C
CNC keyboard, 927
Dimension drawing, 931
Dimensions, 932
Key codes, 928
Key groups, 927
Key layout, 927, 928
Mounting position, 932
Power consumption, 932
USB technology, 929
KB 483C
CNC keyboard, 917
Dimension drawing, 923
Dimensions, 924
Key codes, 918
Key groups, 917
Key layout, 917, 918
Mounting position, 924
Power consumption, 924
USB technology, 921
KBPC CG US standard PC keyboard
Dimensions, 942
Power consumption, 942
KBPC USB standard PC keyboard
Dimensions, 944, 946
Key layout, 943
Power consumption, 944, 946
Key codes
KB 310C, 928
KB 483C, 918
Key covers
15 operator panel w/o VLE, 329
Full CNC keyboard OP 032S, 938

MCP 483C, 633, 647
OP 010C, 108
OP 032S, 737
Key groups
Full CNC keyboard OP 032S, 935
KB 310C, 927
KB 483C, 917
Key layout
KB 310C, 927, 928
KB 483C, 917, 918
KBPC USB standard PC keyboard with integrated hub, 943
PC-standard keyboard MF-II, 939
Key switch
HT 6, 533
MCP 310, 687, 712
MCP 483, 649, 651, 677
MCP 483C, 633, 635, 646
OP 032S, 726, 732, 736
PP 012, 832, 855, 857
Key symbols
OP 010, 67
OP 010C, 99
OP 010S, 83, 155
OP 012, 112, 132
OP 012T, 112, 132
OP 015, 83, 155
OP 015A, 112, 132
OP 08T, 52
TP 015A, 112, 132
Keyboard controller
OP 010, 78
OP 012, 126
OP 015, 163, 164
OP 015A, 178
OP 015AT, 224
Operator panel 15 with VLE, 280
TP 012, 150, 151
TP 015A, 202, 204
TP 015AT, 246, 248
Keyboard controller
OP 010S, 93
Keyboard tray
Dimensions, 948
Keylock switch
Handheld unit B-MPI, 604, 606, 610, 617, 630
MCP 310, 689
Keys
15 operator panel w/o VLE, 305, 312, 316, 321
Handheld unit B-MPI, 617
MCP 310, 708
MCP 483, 673
Operator panel 15 with VLE, 258, 265, 270, 287
Keyswitch
PP 012, 889

L

Labeling strips
Handheld unit B-MPI, 605
Lamps
PP 012, 824, 826, 827, 840, 880
LC display
HT 6, 519
LCD unit
OP 010, 78
OP 012, 126
OP 015, 163
OP 015A, 178
OP 015AT, 224
TP 015A, 202
TP 015AT, 246
LEDs
15 operator panel w/o VLE, 310, 325
Direct control key module, 336
Handheld unit B-MPI, 604, 606, 617
MCP 310, 708
MCP 483, 653, 673
MCP 483C, 637
MPI interface, 898
MPP 483, 803
OP 032S, 731
Operator panel 15 with VLE, 262, 292
PCU 50.3, 440
PP 012, 825

M

MCP 310
COM board, 690, 691, 698
Dimension drawing, 694
Dimensions, 711
DIP switch, 662, 697, 703
DP slave MCP, 698, 701, 705
EMERGENCY STOP key, 688, 689, 713
GSD file, 698
Hand wheel, 688, 713
Handwheel, 699, 705
Hardware code, 662, 697
Key switch, 687, 712
Keylock switch, 689
Keys, 708
LEDs, 708

Mounting position, 695
MPI parameters, 661, 696
PLC basic program, 698, 705
Power consumption, 711
PROFIBUS DP, 661, 696, 707
PROFIBUS parameters, 702
Rotary switch, 687, 700, 712
Slide-in labels, 687, 713, 715
Slots, 688, 689
VDI interface, 705
MCP 483
COM board, 652, 654, 663
Dimension drawing, 658
Dimensions, 676
DIP switch, 653, 662, 697
DP slave MCP, 663, 666, 670
EMERGENCY STOP key, 649, 651
Equipotential bonding conductor, 654
GSD file, 663
Hand wheel, 650, 656, 679
Handwheel, 653, 664
Hardware code, 662, 697
Key switch, 649, 651, 677
Key symbols, 681
Keys, 673
LEDs, 653, 673
Mounting position, 660
MPI parameters, 661, 696
PLC basic program, 663, 670
Power consumption, 676
PROFIBUS DP, 661, 672, 696
PROFIBUS parameters, 667
PROFIBUS-DP, 649
Rotary switch, 665, 677, 678
Slide-in labels, 649, 679, 681
Slots, 651
VDI interface, 670
MCP 483C
Bus address, 643
Dimension drawing, 640
Dimensions, 644
DIP switch, 641
DIP switch, 637
EMERGENCY STOP button, 635
EMERGENCY STOP key, 633, 637, 646
Equipotential bonding conductor, 644
Key covers, 633, 647
Key switch, 633, 635, 646
LEDs, 637
Mounting position, 641
MPI bus, 643
MPI connector, 644
PLC, 642
Power consumption, 644
Rotary switch, 633, 646
Turning, 633
MCP simulation
HT 6, 534
Membrane connector
OP 010S, 94
OP 012, 126
OP 015, 165
TP 012, 152
Membrane connectors
Connection conditions, 43
Membrane keyboard
HT 8, 566
Memory expansion
PCU 50, 386, 397, 398
PCU 50.3, 454, 455
PCU 70, 474, 475
Milling
15 operator panel w/o VLE, 306, 308
Operator panel 15 with VLE, 271, 281, 292
Mini handheld unit
Axis selection switch, 593
Connection kit, 594, 601
Dimensions, 599
Emergency Stop button, 592, 593
Enabling button, 592, 593
Function keys, 593
Handwheel, 592, 594, 596
Rapid traverse key, 592, 594
Traversing keys, 593, 594
Mounting bracket
Distributed configuration with VLE, 477, 484, 492, 499, 502
OP 010S, 87
OP 012, 117
OP 015A, 179
Operator panel 15 with VLE, 257, 267, 292
PCU 50, 374, 397
PCU 70, 468, 474
Thin Client Unit, 511, 514, 517
TP 015A, 203
MPC bus
Handheld unit B-MPI, 625
MPI
PCU 50, 367
MPI bus
Connection conditions, 46
Handheld unit B-MPI, 624, 625, 628
HT 6, 528, 537, 539, 543
MCP 483C, 643

PP 012, 846
MPI cable
15 operator panel w/o VLE, 314
Handheld unit B-MPI, 605, 628
HT 6, 528, 539, 543
Operator panel 15 with VLE, 267
MPI connector
Connection conditions, 47
MCP 483C, 644
MPI interface, 894
PP 012, 857
MPI interface
C-MOS level, 893, 895
Dimensions, 901
DIP switch, 899
LEDs, 898
Mounting position, 899
MPI connector, 894
PLC, 898, 900
PLC basic program, 900
Power consumption, 901
MPI parameters
MCP 310, 661, 696
MCP 483, 661, 696
MPP 483
Actuation elements, 754
Anode connection for LEDs, 783
Coding switch S3, 789, 801
COM board, 755, 789
Contact maker, 822, 892
Customer key board, 755
Dimensions, 810
Direct control keys, 799
DP slave MPP, 806
EKS identification system, 739
Emergency stop button, 796
Extension keys, 798
GD communication, 803
GD parameters, 802
GSD file, 805
Illuminated keys, 821, 891
Installation position, 782
Lamps, 754
LEDs, 803
Power consumption, 810
PROFIBUS DP, 800
PROFIBUS parameters, 807
Selector switch, 754
Signaling lamps, 796, 821, 891
Slide-in labels, 739, 821, 891
Software Version, 801
Special versions, 740
Standard version, 739
Standard version, extended, 739
Supplementary elements, 741
System configuration, 741
MPP 483
COM board, 803
MPP 483H
HGA board, 755
MPP 483HTC
HGA board, 756

N

NC unit
Operator panel 15 with VLE, 270
network installation
Connection conditions, 47
Numerical control
Operator panel 15 with VLE, 258, 281

O

On / Off switch
PCU 50.3, 408
OP 010
Dimension drawing, 72
Dimensions, 74
Front USB interface, 65, 66
Individual parts, 76
Installation, 72
Key pads, 67
Key symbols, 67
Mounting hole, 71
Power consumption, 74
Slide-in labels, 77
TFT flat screen, 65
Tightening torques, 74
VGA resolution, 65
OP 010C
Dimension drawing, 103
Dimensions, 105
Front USB interface, 98
Individual parts, 107
Key covers, 108
Key pads, 99
Key symbols, 99
Mounting hole, 103
Power consumption, 105
TFT flat screen, 97
Tightening torques, 105
VGA resolution, 97

OP 010S
Dimension drawing, 86
Dimensions, 90
Front USB interface, 81, 82
Individual parts, 92
Key symbols, 83, 155
Mounting bracket, 87
Mounting hole, 86
Power consumption, 90
TFT flat screen, 81
Tightening torques, 90
VGA resolution, 81
OP 012
Dimension drawing, 116
Dimensions, 122
Front USB interface, 109, 111
Individual parts, 124
Key pads, 112, 132
Key symbols, 112, 132
Mounting bracket, 117
Mounting hole, 116
Power consumption, 122
SVGA resolution, 109
TFT flat screen, 109
Tightening torques, 123
OP 012T
DHCP Server, 129
Dimension sheet, 135
Dimensions, 139
Ethernet cable, 140
Ethernet switch, 140
Ethernet, industrial, 129
Key pads, 112, 132
Key symbols, 112, 132
Mounting hole, 135
Power consumption, 139
PROFIBUS-DP, 129
Signal transmission, 129
SVGA resolution, 129
TFT flat screen, 129
Thin Client, 129
Tightening torques, 139
OP 015
Dimension drawing, 158
Dimensions, 161
Front USB interface, 153, 154
Individual parts, 163
Key symbols, 83, 155
Mounting hole, 158
Power consumption, 161
TFT flat screen, 153
Tightening torques, 161
OP 015A
Dimension drawing, 172
Dimensions, 177
Front USB interface, 167
Individual parts, 178
Key pads, 112, 132
Key symbols, 112, 132
Mounting bracket, 179
Mounting hole, 172
Power consumption, 177
TFT flat screen, 167
Tightening torques, 177
OP 015AT
Dimension drawing, 222
Dimensions, 223
Individual parts, 224
Power consumption, 223
TFT flat screen, 213
Tightening torques, 223
OP 032S
Dimension drawing, 734
Dimensions, 735
DIP switch, 729
EMERGENCY STOP key, 726, 736
Feed override switch, 725
Key covers, 737
Key switch, 726, 732, 736
LEDs, 731
Opening, 726
Override switch, 726, 727, 737
PLC, 730
Power consumption, 735
OP 08T
Dimensions, 57
Power consumption, 57
Tightening torques, 57
Opening
OP 032S, 726
Operating system
PCU 503, 406
Operator panel 15 with V LE
Hand wheel, 299
Operator panel 15 with VLE
Axis override switch, 281
CNC keyboard, 257, 258
Coding switches, 278
Configuration, distributed, 257, 258
Configuration, integrated, 257
DIP FIX switches, 280
DIP switch, 286
DIP switches, 263
EMERGENCY STOP key, 259

EMERGENCY STOP key, 264
EMERGENCY STOP key, 271
Flat mounting, 257
Hand wheel, 258, 265, 281
Illuminated keys, 271
Illuminated pushbuttons, 299
Keyboard controller, 280
Keys, 258
Keys, 265
Keys, 270
Keys, 287
LEDs, 262, 292
Milling, 271, 281, 292
Mounting bracket, 257
Mounting bracket, 267
Mounting bracket, 292
MPI cable, 267
NC unit, 270
Numerical control, 258
Numerical control, 281
Override switch, 258
Override switch, 265
Qwerty keyboard, 257, 269, 270, 291
Rotary switch, 281, 286, 299
Threaded bolt, 262, 270, 271, 292
Turning, 271, 281, 292
Upright mounting, 257
Video link receiver, 257, 258
Video link receiver, 269
Video link receiver, 290
Video link cable, 257
Video link cable, 261
Video link cable, 290
Videolink cable, 267
Videolink transmitter, 258
Videolink transmitter, 269
Videolink transmitter, 290
Videolink transmitter, 292
XGA resolution, 270
Operator panel interlock
Distributed configuration with VLE, 488
Override switch
15 operator panel w/o VLE, 306, 312
Handheld unit B-MPI, 606
OP 032S, 726, 727, 737
Operator panel 15 with VLE, 258, 265
Override switch
Handheld unit B-MPI, 604

P

Panel mounting
HT 8, 581
Parameter assignment
Handheld unit B-MPI, 617
Parameterization
HT 6, 534
PC Cards
PCU 70, 471
PCI card
PCU 50.3, 454
PCU 503, 405
PCI module
PCU 50.3, 459
PCMCIA cards
PCU 50, 386
PC-standard keyboard MF-II
Dimensions, 940
Hand rest, 939
Key layout, 939
Power consumption, 940
PS2 technology, 939
USB technology, 939
PCU 20
Device fan, 372
Dimensions, 364
External floppy disk drive, 372
Mounting positions, 359
Power consumption, 364
Reset button, 355, 372
Screen resolution, 351
Variants, 351
PCU 50
Backup battery, 389, 394
Basic software, 383
BIOS parameters, 379
BIOS setup, 382
Boot manager, 379
Cardbus cards, 386
Central mounting, 374
Configuration, distributed, 374
Device, 367
Device fan, 389, 393
Dimensions, 387
Ethernet, 367, 371, 386
Flat mounting, 374
Hard disk drive, 389
Memory expansion, 386, 397, 398
Mounting bracket, 374, 397
Mounting positions, 375
MPI, 367
PCMCIA cards, 386
Power consumption, 387
PROFIBUS-DP, 367

Screen resolution, 368
Setup menu, 382
Standard mounting, 374
Touch software, 383
Upright mounting, 374
PCU 50.3
7-segment displays, 439
Backup battery, 449
BIOS setup, 436, 439
Boot list, 436
Central mounting, 420
Compact Flash card, 454, 460
Device fan, 448
Dimensions, 441
Fastening angle, 420
Flat mounting, 420
Hard disk drive, 431, 444
LEDs, 440
Memory expansion, 454, 455
Mounting bracket, 454
Mounting positions, 424
On / Off switch, 408
PCI card, 454
PCI module, 459
Power consumption, 441
Power supply, 446
Power supply module fan, 447
Standard mounting, 420
Touch software, 433
Upright mounting, 420
USB FlashDrive, 436
PCU 503
Processor, 405
PCU 503
PCI card, 405
PCU 503
Working memory, 406
PCU 503
Hard disk drive, 406
PCU 503
Operating system, 406
PCU 503
Screen resolution, 406
PCU 503
Ethernet, industrial, 406
PCU 70
Backup battery, 473
Boot manager, 471
Central mounting, 468
Configuration, distributed, 463, 468, 470
Device fan, 467, 473
Dimensions, 472
Ethernet, 464, 466
External floppy disk drive, 467, 474
Flat mounting, 468
Memory expansion, 474, 475
Mounting bracket, 468, 474
Mounting positions, 469
PC Cards, 471
Power consumption, 472
Reset pushbutton, 467
Videolink transmitter, 468, 470
PG connection
PP 012, 824, 831
PLC
Handheld unit B-MPI, 606, 608, 613, 615, 617
HT 6, 533, 534
MPI interface, 898, 900
OP 032S, 730
PP 012, 858, 859, 874
PLC
MCP 483C, 642
PLC basic program
MPI interface, 900
PP 012
Actuation elements, 826
Agreement button, 858, 859, 862
Block diagram, 828
COM connection, 824, 831
Connection for handheld units, 824, 826, 831, 858
Dimension drawing, 855
Dimensions, 882
DIP switch, 824, 827, 872
Direct control key, 824, 827, 840, 866
Distribution list, 824, 825, 826
EMERGENCY STOP button, 889
Emergency stop circuits, 859
EMERGENCY STOP key, 826, 827, 831, 832, 839, 857, 865
Equipotential bonding conductor, 857
expansion panel, 868
GD configuring, 827
GD identification, 874, 875
Jump key, 824, 826, 827, 831, 832, 858
Key switch, 832, 855, 857
Keyswitch, 889
Lamps, 824, 826, 827, 840, 880
LEDs, 825
MPI bus, 846
MPI connector, 857
PG connection, 824, 831
PLC, 858, 859, 874
Power consumption, 882
Selector switch, 827, 831, 832, 840, 854, 857, 889

Signaling lamps, 827, 864, 888
Slide-in labels, 833, 878
Terminator, 858, 859
two-channel enabling function, 859, 860
PPROFIBUS-DP
Direct control key module, 335
Processor
PCU 503, 405
Profibus cable
Direct control key module, 338
Profibus connector
Direct control key module, 341
PROFIBUS DP
MCP 310, 661, 696, 707
MCP 483, 661, 672, 696
MPP 483, 800
PROFIBUS parameters
MCP 310, 702
MCP 483, 667
MPP 483, 807
PROFIBUS-DP
MCP 483, 649
OP 012T, 129
PCU 50, 367
Programming switch
15 operator panel w/o VLE, 325
Protective separation
Connection conditions, 27, 28
PS2 technology
Full CNC keyboard OP 032S, 936
PC-standard keyboard MF-II, 939

Q

Qwerty keyboard
Operator panel 15 with VLE, 269, 270, 291
QWERTY keyboard
Operator panel 15 with VLE, 257

R

Repeater
Handheld unit B-MPI, 608, 610
HT 6, 529
Reset button
PCU 20, 372
Reset pushbutton
HT 6, 520, 527
Reset pushbutton switch
HT 6, 523, 527
RI suppression
Connection conditions, 26
Rotary override switch
HT 6, 519
HT6, 550
Rotary switch
15 operator panel w/o VLE, 329
MCP 310, 687, 700, 712
MCP 483, 665, 677, 678
MCP 483C, 633, 646
Operator panel 15 with VLE, 281, 286, 299

S

Screen calibration
TP 012, 147
TP 015A, 147, 199
TP 015AT, 243
Screen resolution
PCU 20, 351
PCU 50, 368
PCU 503, 406
Selector switch
PP 012, 827, 831, 832, 840, 854, 857, 889
Setup menu
PCU 50, 382
Shielded signal cables
Connection conditions, 31
short-circuit connector
HT 6, 533
Signal transmission
OP 012T, 129
Signaling lamps
MPP 483, 821, 891
PP 012, 827, 864, 888
Slide-in labels
Handheld unit B-MPI, 630
HT 6, 553
HT6, 555
MCP 310, 687, 713, 715
MCP 483, 649, 679, 681
MPP 483, 739, 821, 891
OP 010, 77
OP 012, 125
OP 015A, 179
OP 015AT, 225
PP 012, 833, 878
TP 015A, 203
TP 015AT, 247
Slots
MCP 310, 688, 689
MCP 483, 651
Software

Floppy disk drive 3.5" (USB), 963, 964
Standard mounting
PCU 50, 374
PCU 50.3, 420
SVGA resolution
Distributed configuration with VLE, 486
OP 012, 109
OP 012T, 129

T

Temperature monitor
Distributed configuration with VLE, 488
Terminator
PP 012, 858, 859
TFT flat screen
OP 010, 65
OP 010C, 97
OP 010S, 81
OP 012, 109
OP 012T, 129
OP 015, 153
OP 015A, 167
OP 015AT, 213
TP 015AT, 233
TFT operator panel front
Distributed configuration with VLE, 482
Thin Client
HT 8, 557
OP 012T, 129
Thin Client Unit
Mounting bracket, 514
Thin Client Unit
Configurations, 508
DHCP Server, 508
Ethernet, industrial, 507
Mounting bracket, 511
Thin Client Unit
Power consumption, 516
Thin Client Unit
Dimensions, 516
Thin Client Unit
Mounting bracket, 517
Thin Client Unit
Ethernet cable, 517
Thin Client Unit
Ethernet switch, 517
Threaded bolt
15 operator panel w/o VLE, 309, 316, 317, 322
Operator panel 15 with VLE, 262, 270, 271, 292
Touch controller
TP 012, 151
TP 015A, 204
TP 015AT, 248
Touch Screen
HT 8, 565
TP 012, 141, 150
TP 015A, 189
Touch software
PCU 50, 383
PCU 50.3, 433
TP 012
Dimension drawing, 145
Dimensions, 148
Front USB interface, 141, 142
Individual parts, 150
Mounting hole, 145
Power consumption, 148
Screen calibration, 147
Tightening torques, 148
Touch Screen, 141
TP 015A
Dimension drawing, 195
Dimensions, 200
Front USB interface, 189
Individual parts, 202
Key pads, 112, 132
Key symbols, 112, 132
Mounting hole, 195
Power consumption, 200
Tightening torques, 200
Touch Screen, 189
XGA resolution, 189
TP 015AT
Dimension drawing, 243
Dimensions, 244
Individual parts, 246
Power consumption, 244
TFT flat screen, 233
Tightening torques, 244
Trackball rest
PC-standard keyboard MF-II, 939
Turning
15 operator panel w/o VLE, 305, 306, 310
MCP 483C, 633
Operator panel 15 with VLE, 271, 281, 292
two-channel enabling function
PP 012, 859, 860

U

Upright mounting
Distributed configuration with VLE, 480, 499
Operator panel 15 with VLE, 257

PCU 50, 374
PCU 50.3, 420
USB FlashDrive
PCU 50.3, 436
USB interface
HT 8, 567
USB technology
KB 310C, 929
KB 483C, 921
PC-standard keyboard MF-II, 939
User Interface
Connection conditions, 27, 28

V

VDI interface
MCP 310, 705
MCP 483, 670
VGA resolution
Distributed configuration with VLE, 486
OP 010, 65
OP 010C, 97
OP 010S, 81
Video link receiver
Operator panel 15 with VLE, 269, 290
Video link cable
Operator panel 15 with VLE, 257, 261, 267, 290
Video link receiver
Operator panel 15 with VLE, 258
Videolink receiver
15 operator panel w/o VLE, 305
15 operator panel w/o VLE, 319
Distributed configuration with VLE, 477, 479, 481, 482
Videolink cable
15 operator panel w/o VLE, 306, 314
Distributed configuration with VLE, 477, 479, 482, 485
Videolink receiver
15 operator panel w/o VLE, 306
Operator panel 15 with VLE, 257
Videolink transmitter
15 operator panel w/o VLE, 306
Distributed configuration with VLE, 477, 479, 481, 482, 492
Operator panel 15 with VLE, 258, 269, 290, 292
PCU 70, 468, 470

W

Working memory
PCU 503, 406

X

XGA resolution
Distributed configuration with VLE, 486
Operator panel 15 with VLE, 270
TP 015A, 189