Load cell SQB

地上衡、配料秤、低平面台秤
Floor scale,blending scale,low platform scale

SQB/SQB–A 0.25–2.5t

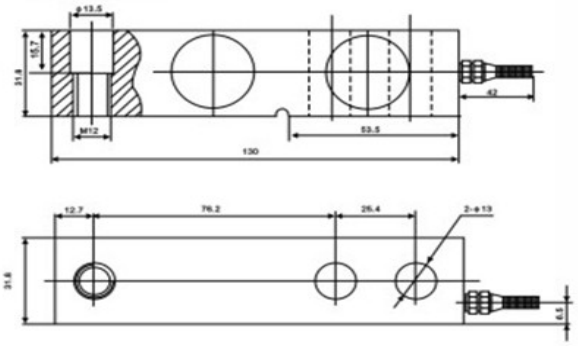

SQB–SS/SQS–ASS 3~10t

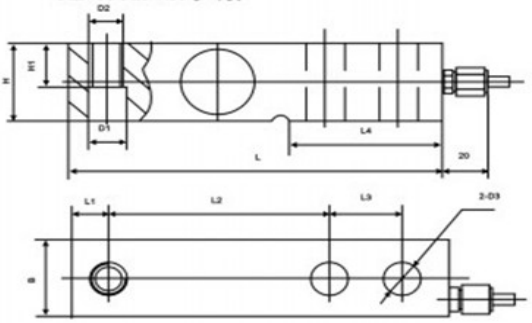

SQB–SS/SQS–ASS 0.25–2.5T

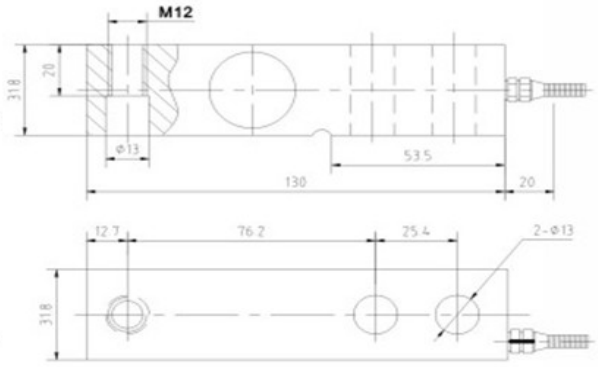

额定载荷(t) Rated Load	L	L1	L2	L3	L4	H/B	H1	D1	D2	D3
3,5	171.5	19	95.3	38.1	72.5	38.1	26	ϕ20	M18x1.5	ϕ20
7.5~10	225.5	25.3	124	50.8	102	50.8	25.4	ϕ27	M24x2	ϕ27

TECHNICAL PARAMETER

4Wires:Exc+(红,Red);Exc-(黑,Black);Sig+(绿,Green);Sig-(白,White)

额定载荷 Rated capacities(Emax)	0.25, 0.3 ,0.5,0.75,1,1.5,2,2.5,3,5,7.5,10t	温度补偿范围 Temperature range, compensated	-10℃~+40℃
灵敏度 Sensitivity	3.0±0.003mV/V(0.5~10t);2.0±0.002mV/V (0.25~0.3t)	工作温度范围 Temperature range, operating	-30~+70℃
精度等级Accuracy class	C2~C5	安全过载 Maximum safe overload	150%F.S
		极限过载 Ultimate overload	180%F.S
零点平衡 Zero balance	±1%F.S	推荐激励电压 Excitation,recommend	10~12V DC
零点温度影响 TCO	±0.02%F.S/10℃	最大激励电压 Excitation,maximum	15V DC
输出温度影响 TC SPAN	±0.02%F.S/10℃	防封等级 Protection class	IP67(0.25~0.75t);IP68(1~10t)
输入阻抗 Input impedance	400±20Ω	材质 Construction	合金钢Alloy Steel 不锈钢Stainless Steel
输出阻抗 Output impedance	352±3Ω	电缆 Cable	Length:3m(0.25~2.5t),4.2m(3~5t),5m(7.5~10t)
绝缘电阻 Insulation impedance	≥5000MΩ	Diameter: ϕ5mm(合金钢0.25~5t;不锈钢0.25~0.3t); ϕ6mm(合金钢7.5~10t,不锈钢0.5~10t)	

SQB/-A/-SS Bottom Components/Weighing Module

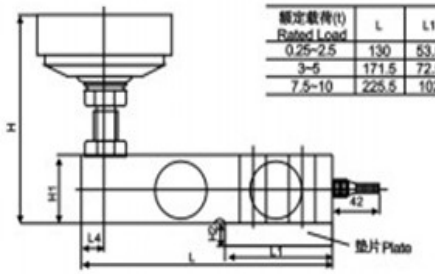

额定载荷(t) Rated Load	L	L1	L2	L3	L4	B	H	H1	H2	H3	D	D1	D2	D3
0.25~2.5	130	53.5	25.4	76.2	12.7	31.8	77.8	31.8	12	4	φ13	φ38	φ12	Sφ16
3~5	171.5	72.5	38.1	95.3	19	38.1	94.1	38.1	10	6	φ20	φ50	φ16	Sφ20
7.5~10	225.5	102	50.8	124	25.3	50.8	130	50.8	10	8	φ27	φ64	φ20	Sφ32

总装（B）0.25~10t钢球压头 附件 Installation B :feet

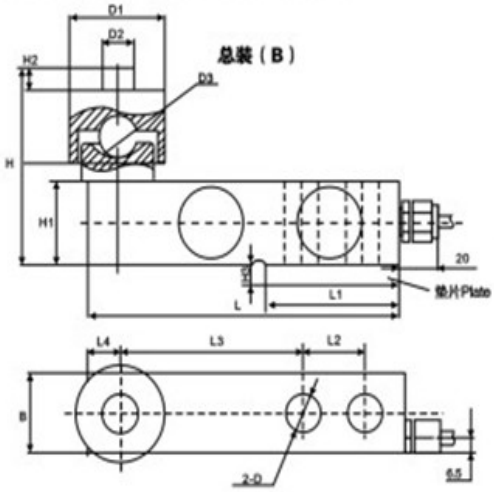

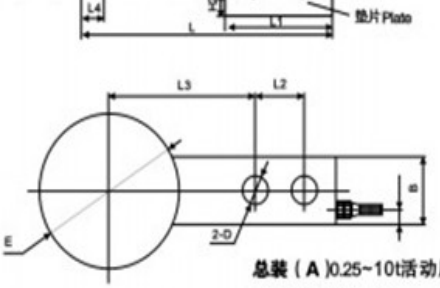

总装（A）0.25~10t活动压头附件

Installation A :feet

额定载荷(t) Rated Load	L	L1	L2	L3	L4	B	H	H1	H2	D	E
0.25~2.5	130	53.5	25.4	76.2	12.7	31.8	85-90	31.8	4	φ13	φ62
3~5	171.5	72.5	38.1	95.3	19	38.1	104-114	38.1	6	φ20	φ62
7.5~10	225.5	102	50.8	124	25.3	50.8	132-144	50.8	8	φ27	φ80

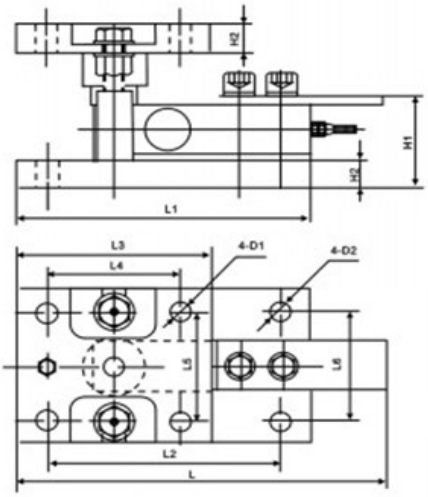

总装（D）称重模块

Installation(D) weighing module

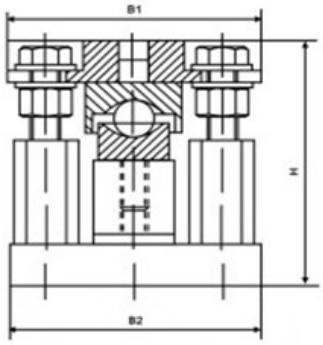

额定载荷(t) Rated Load	H	H1	H2	B1	B2	D1	D2	L	L1	L2	L3	L4	L5	L6
025,0.5,0.75 1,1.5,2,2.5	106	58	18	100	100	φ13	φ13	210	175	140	116	80	70	70
3,5	135	73	23	160	160	φ17	φ17	270	235	200	150	100	90	90
7.5,10	186.3	93.3	28.5(7)	180	180	φ26	φ26	345.2	310	250	210.4	150.4	110	110

0.25~5t称重模块

Weighing module installation

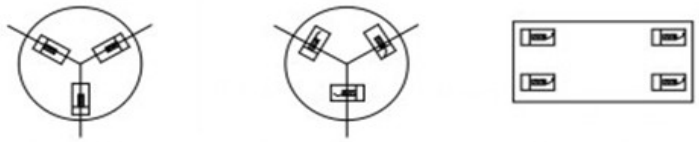

径向安装Radial mounting　　切向安装Cutting mounting　　矩形安装Rectang mounting

HANGZHOU GONGHENG WEIGHING EQUIPMENT CO.,LTD

www.hzgh-scales.com　　hzghscale@yahoo.com