宁波飞扬电子有限公司
Ningbo Flying Electronics Co.,Ltd.

0.56"(14.2mm)Single Digit 7 Segment Display

Features:

*Ultra segment intensity
*Wide viewing angle
*Range of colors
*Black face White segment
*RoHS compliant

Available option:

*Alternative face and segment color
*Alternative font
*Cropped terminal pins
*Available emitting color
*Low current version

Electro/Optical Characteristics If=20mA Ta=25℃

Part Number Common Cathode	Part Number Common Anode	Emitting Color	Peak Wavelength	Forward Voltage V_F/Seg.		Luminous Intensity Iv/Seg.	
				Typ.	Max.	Min.	Typ.
NFD-5612ABG-11	NFD-5612BBG-11	InGaN Bluish Green	505	3.30	3.80	180.00	220.00
NFD-5612APG-11	NFD-5612BPG-11	InGaN Pure Green	525	3.30	3.80	180.00	220.00
Units			nm	V		mcd	

Maximum Ratings Ta=25℃ (Derate above 25 C)

Characteristic	Test Condition	Symbol	BG	PG							Units
Pulse Forward Current Per Seg.	1/10 duty cycle 0.1ms Pulse width	I_{FP}	100	100							mA
DC Forward Current Per Seg.		I_F	30	30							mA
Reverse Current Per Seg.	V_R=5V	I_R	10	10							μA
Power Dissipation		P_D	120*8	120*8							mW
Operating Temperature		T_{OPR}	-40 to +80								℃
Storage Temperature		T_{TSG}	-40 to +85								℃
Lead soldering temperature	1.60mm from body maximum 3 seconds		260								℃

Checked	Chen N.H.	Approved	Jason Chen	Date	Mar/04/2007	PAGE 1 /2

宁波飞扬电子有限公司
Ningbo Flying Electronics Co.,Ltd.

http://www.nb-flying.com
e-mail:flying@nb-flying.com
TEL:+86-574-88136626
FAX:+86-574-88136627

0.56"(14.20mm)Single Digit 7 Segment Display

PACKAGE DIMENSION

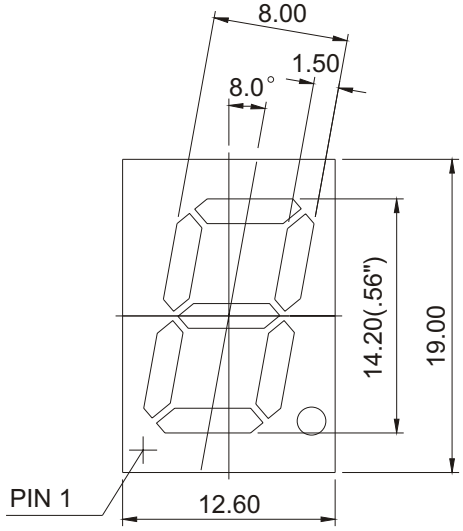

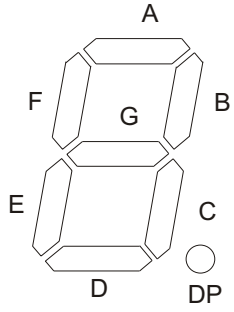

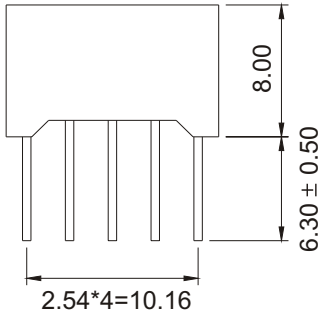

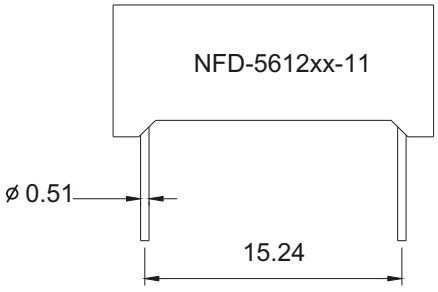

Tolerance ±0.25mm unless stated

INTERNAL CIRCUIT DIAGRAM

Common Cathode
NFD-5612Ax

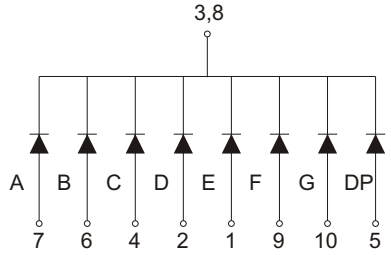

Common Anode
NFD-5612Bx

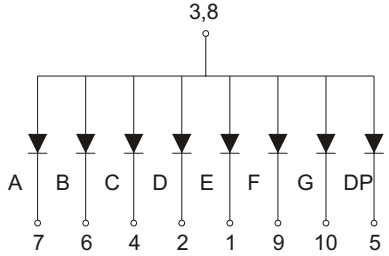

Checked	Chen N.H.	Approved	Jason Chen	Date	Mar/04/2007	PAGE 2 /2